BOSTON PUBLIC LIBRARY
3 9999 06656 630 6

T223
.C246
1943
v.5, pt. 2

No. _____

THE TRUSTEES OF THE
PUBLIC LIBRARY
IN THE LUX OF
OMNIUM CIVIUM
OF THE CITY OF
BOSTON
1852 1878

Published May 25, 1943

Serial No. 262,552

291,877

ALIEN PROPERTY CUSTODIAN

CALCULATING MACHINE

Karl Berthold Wilhelm Kiel, Glashutte, Germany; vested in the Alien Property Custodian

Application March 17, 1939

Calculating machines provided with short-cut multiplication arrangements are known in the most widely varied forms. A large number of this type of calculating machine is provided with a multiplier setting mechanism in which the multiplier must be completely set up and the machine then set in operation by actuating a so-called starter key. A defect of these machines is that the total multiplier must first be set up in the calculating machine before the latter can begin operation. The present invention does not relate to this type ef machine, but rather to calculating machines provided with multiplier keys "0"–"9". By pressure on one of these keys a number of calculating shaft revolutions corresponding to the value of the key takes place and a subsequent carriage shift to the next higher decimal place occurs. Arrangements heretofore proposed are defective in that, on termination of the multiplication, it is necessary to see whether the machine has operated by the short-cut method in the highest decimal place in the multiplier and, if such is the case, a key must be again actuated. With careless operation, this requirement leads to incorrect results.

An object of the invention is to avoid this defect and to provide means whereby the multiplier keys, for short-cut multiplication, are subdivided into two groups and one group, that comprising the keys "6"–"9", is connected with a mechanism which initiates a number of calculating shaft revolutions in the minus or negative direction corresponding to the supplement of the key value and then causes the machine to make a plus or positive revolution, after the carriage shift. The group comprising the keys "1"–"5" operates in the usual manner.

An object of the invention, therefore, is to provide an arrangement in which a preliminary setting up of the multiplier is not necessary. On the contrary, the machine begins to operate at once with the first multiplier decimal position. In addition, after the multiplier has been keyed, the correct result appears in the totaliser, whether the highest decimal place of the multiplier has been considered negatively or positively in the machine.

Also calculating machines are known which are provided with a row of multiplier keys "0"–"9" and in which these keys, for the purpose of short-cut multiplication, are divided into two groups, one of which, the group "6"–"9", is connected with a mechanism which initiates negative or minus revolutions corresponding to the supplement of the key value. However, in these machines it is necessary to begin with the setting up of the highest decimal place of the multiplier and therefore a preliminary setting of the carriage is necessary. This preliminary setting is not only troublesome but, also, often causes calculating errors through carelessness of the operator.

An object of the invention is to provide a setting member provided with shoulders or abutments which control the revolutions of the calculating machine shaft and such setting member being shifted stepwise, and the multiplier keys cooperating therewith. According to the invention the setting member abutments cooperating with the keys "6"–"9" are made so that they allow two shift advances more than the supplement of the key value, of which one advance is employed in the usual manner to shift the calculating carriage into the next higher decimal place and the other serves for a plus rotation in such next higher decimal place. In this manner a constructively simple shift drive is provided in which all necessary actuations are initiated from a single setting member. As the setting member serves at the same time as a key check the result is that all keys can be checked until the movements initiated by the preceding key depression are completely terminated.

In accordance with the invention the complete totaliser must be in the range of the tens carrying-over mechanism provided by the machine or the totaliser must itself be provided with such a mechanism extending entirely therethrough. If these constructions are absent in the machine, it is preferable to provide an arrangement which, when the machine is set for negative or subtractive multiplication will release a correcting member so that on the tens carry-over into the highest acting operative dial it will move into the path of the gears connected with the dials and on the following carriage shift will cause the necessary rectifying movement. It is thus possible, to provide the arrangement of the present invention on calculating machines in which the calculating mechanism on the carriage has no tens carrying-over mechanism extending entirely therethrough and in which the carriage extends beyond the calculating machine frame proper.

It is an object of the invention to provide means whereby the key "0" of the multiplier keys may act through a rod device directly on the rod mechanism controlling the carriage shift. In this manner it is possible, by a single, long-continued pressure on the "0" key, to make a number of successive shifts of the carriage uninterruptedly, which may be suitable for example when the

multiplier has a number of zeros in adjacent decimal positions.

A further object is to provide a key stop for the multiplier key bank "6"–"9", which is carried into operative position when the highest decimal position of the revolutions counter is shifted opposite the lowest decimal position of the calculating mechanism, or when the carriage reaches its extreme right position. Errors in calculation caused by depression of one of the keys the value of which has already been supplementarily considered, are thereby prevented.

A further object is to provide means whereby after a key has been pressed in the last or highest position of the revolutions counter, in order to prevent errors by additional unintentional pressure on the multiplier keys, a check member is coordinated with the multiplier keys which prevents further depression of these keys, when the carriage is in its extreme right end position.

With these and other objects in view which will become apparent from the detailed description below, the invention is shown in the drawings in which:

Fig. 1 is a plan view of a Thomas calculating machine having the arrangement of the present invention.

Fig. 2 is a partial vertical cross section on line II—II of Fig. 1.

Fig. 2A is a continuation to the right of Fig. 2.

Fig. 3 is a partial lateral elevation viewed in the direction of the arrow *a* in Fig. 1 with the side plate removed.

Fig. 4 is a similar view to Fig. 3 showing the elements in a different operative position and with certain elements removed for greater clarity.

Fig. 5 is also a similar view to Fig. 3 showing the elements in a still different operative position and with certain parts omitted for greater clarity.

Fig. 6 is still another view similar to Fig. 3 with certain elements omitted to show the parts in a still further operative position.

Fig. 7 is a side elevational view showing the means for shifting the setting member operated from the main calculating shaft.

Fig. 8 is a side elevational view showing particularly the setting member and certain elements cooperating therewith.

Fig. 9 is a side elevational view of the setting member and various elements cooperating therewith in another operating position.

Fig. 10 is a similar view to Fig. 9 with certain portions omitted illustrating the parts in a different operative position.

Fig. 11 is a detailed view of certain elements shown in Fig. 9 with the parts in a different operative position.

Fig. 12 is a vertical cross sectional view on the section line XII—XII of Fig. 3 looking in the direction of the arrows.

Fig. 13 is a view similar to Fig. 12 with the parts in a different operative position.

Fig. 14 is a vertical cross sectional view on the section line XIV—XIV of Fig. 3 looking in the direction of the arrows.

Fig. 15 is a cross sectional view on the section line XV—XV of Fig. 3.

Fig. 16 shows a portion of Fig. 3 with the parts in a different operative position.

Fig. 17 shows a portion of Fig. 2A with the parts in a different operative position.

Fig. 18 is a partial rear elevational view looking in the direction of the arrow *b* in Fig. 2.

Fig. 19 is a partial lateral elevation viewed in the direction of the arrows *c* in Fig. 1 with the side plate removed and parts broken a for greater clarity.

Fig. 19A is a continuation of Fig. 19 to right.

Fig. 20 shows a portion of Figs. 19 and with the parts in a different operative posit

Figs. 21 and 22 are detailed showings of tions of Fig. 3.

Fig. 23 is a partial plan view of a calcula machine in which the carriage projects at end beyond the machine frame.

Fig. 24 is a partial lateral elevation viewe the direction of the arrow *d* in Fig. 23 with p broken away.

Fig. 25 is a partial plan view looking in direction of the arrow *e* in Fig. 24 with the c and the carriage removed for greater clarity

Fig. 26 is a view similar to Fig. 24 with parts in a different operative position.

Fig. 27 is a partial plan view of Fig. 26 the cover and carriage removed.

Fig. 28 is also a partial plan view of Fig with the cover and carriage removed showing parts in a different position.

Fig. 29 is a partial cross sectional view on tion line XXIX—XXIX of Fig. 23.

The calculating machine shown is driven an electric motor and 1 designates the keyb on which the multiplicand is set up in multi ing operations. The carriage 2 mounted slid on the machine frame carries the revolut counter 3 and the totaliser 4. 5 designates two carriage shift keys. The clearing key is sh at 6, the quotient and division shift lever at 7 addition key at 8 and the subtraction key at

General features of calculating machine

As shown in Figs. 1, 2 and 2A, the keys 8 9 are mounted on the parallel adjacent leve and 11, respectively. These levers are pivote 12 on the machine frame wall 14 and are subject to the action of a spring 13, which the levers in the position shown in Fig. 2. tached to the lever 10 is a pin 15 which ext within range of a lever 16. The latter is tached to a shaft 17 which is rotatably journ in the machine frame.

Provided on the lever 10 is also a pin 18 w extends within range of the movement of a clined surface 20 provided on a bar 22. A sir pin 19 is attached to the lever 11 and extends the path of movement of the inclined surfac also provided on the bar 22. A slot 24 is vided in the bar 22 and a pin 23 provided o machine frame extends therethrough. The end of the bar 22 engages by means of a pi with a lever described hereinafter.

An upwardly extending member 22′ of the 22 is connected by a pin 26 with a lever 27 w is journalled in the machine frame at 28. tached to the lever 27 is another lever 29 w carries a pin 30 which engages in the slot 31 lever 32. Lever 32 is pivoted at 33 to a pla which is journalled by means of a pin 35 o frame 14. Plate 34 is provided with a cam 36 which cooperates with a cam 38 mounte the main calculating shaft 37. The cam circular and is provided with a recess 38′ (see Fig. 9), in which the cam roller 36 seats shaft 37 is inoperative.

When the shaft 37 operates the plate through the cam 38, is rocked against the tion of the spring 34′ engaged therewith int position shown in Fig. 17 by dot and dash

The lever 32 thereby moves in the direction of the arrow in Fig. 2.

The lever 32 is provided with two shoulders 32′ and 32″. According to the direction in which the lever 32 is rocked about the pivot 33 by the rod mechanism 22—30, one or the other of these shoulders will contact with one of the pins 39′ or 39″. These pins are on a plate 39 mounted on a shaft 40. The latter is journalled in the two frame walls and provided with two upwardly extending pins 41 which engage at their free ends in two corresponding openings provided in a bar 42. The bar 42 is slidable transversely to its longitudinal axis in the machine frame.

The bar 42 engages in the annular recesses 46 of the mountings 47 which carry the bevel gears 48 and 49 at both sides and the mountings are longitudinally slidably but non-rotatably mounted on the square shafts 50.

Attached to each shaft 50 is a check disc 51 (see Fig. 29) the periphery of which is provided with ten circular recesses 51′. Connected with each disc 51 is a spur gear 52, each provided with ten teeth. With each shaft 50 there is coordinated a similar square shaft 53 on which a mounting 54 is non-rotatably but axially slidably mounted. This mounting 54 is provided with a check segment which, when the mounting is in the inoperative or starting position, checks the coordinated disc 51.

Also mounted on the mounting 54 is a tooth 56 which, when the corresponding housing is moved backwardly, that is, to the left according to Fig. 25, is carried into the plane of the gear 52. The movement of the individual mountings is effected by special fingers, which are actuated by the shift teeth 66 of the totaliser dials 63 provided in the carriage 2. These fingers are omitted so as not to confuse the drawing.

Mounted on each shaft 53 is a stepped roller 57, usual with Thomas machines, and bevel gear 58 (see also Fig. 19). The bevel gears 58 are driven by means of the bevel gears 59 on the main calculating shaft 37. Cooperating with the stepped rollers are the gears 60, mounted axially slidable but non-rotatably on the shafts 50, and the adjustment or setting of the gears 60 depends on the key depressed in the coordinated key bank 45.

The gears 60, one of which is coordinated with each key bank 45, according to the exemplary construction shown, are set in the following manner. Each key bank 45 contains nine key stems 100, which carry the keys "1"–"9." Journalled on the stems 100 (which are held in the initial position by springs not shown on the drawing) are the rollers 101 which extend into the plane of a bar 102. The later is pivoted at 103 and 104 to two levers 105 and 106 respectively. Lever 105 is journalled at 107 and lever 106 at 108 on the wall of the key bank.

Engaged with a lever arm 109 provided on lever 105 is a traction spring 110 which tends to apply the lever 105 and lever arm 109 against a stop pin 111. Lever arm 109 cooperates with a roller 112 carried by a downward extension 113 of a bar 114. Bar 114 is slidably guided along the key bank frame, and is engaged by a traction spring 115 which tends to hold the bar 114 in the initial position according to Fig. 19. The bar 114 is provided with a rack 116 which engages a gear 118 carrying a number dial 117. A downwardly extending extension 119 provided at one end of bar 114 is bifurcated and engages the gear 60.

Operation of calculating machine

The operation of this arrangement is as follows.

When, in the coordinated key bank, the key "4" is depressed, for example, the coordinated gear 60 is moved to the left as shown in Figs. 19 and 19A, by the rod mechanism 102—119, so that the gear 60 is moved opposite that portion of the stepped roller 57 on which there are four teeth. In a complete revolution of the main calculating shaft 37, during which the shafts 53 each describe a complete revolution, through the coordinated stepped roller the corresponding gear 60 as well as the shaft 50 carrying it, is rotated, for 4/10 revolution, corresponding to the four teeth entering into the operation on the stepped roller.

According to the position of the coordinated gear mounting 47, either the bevel gear 48 or the bevel gear 49 engages with the corresponding totaliser bevel gear 61. Each of the totaliser sight openings 62 provided in the carriage 2 has coordinated with it a number dial 63 attached to the shaft 64. The latter is journalled in the carriage 2 and, in addition to the bevel gear 61, carries the shift tooth 66 which, when the number dial is turned from "9" to "0," actuates a pawl which, in its turn, acts on the drive of the mountings 47.

Accordingly as the gear 49 or the gear 48 is engaged with the gear 61, the number dial 63 is rotated in the positive or negative direction, that is, when the shaft 50 is turned for a 4/10 revolution the number dial, for example, showing a "*a*," is either set forward to "6" or back to "8." The meshing of the bevel gear 49 or 48 with the gear 61 depends on the position of the lever 32, for in the rocking movement of the plate 34, if the lever 32 is in the upper end position as shown in Fig. 2, the plate 39 and the shaft 40 are rocked clockwise, while if the lever 32 is in the lower end position (as shown in Fig. 17), the plate 39 and the shaft 40 are rocked counterclockwise.

Shifting mechanism for revolutions counter

A very similar mechanism is provided for the revolutions counter mechanism 3. Coordinated with each sight opening 120 of this latter mechanism is a number dial 121 which is attached on a shaft 122 journalled in the carriage 2. Shaft 122 also carries a shift tooth 123 for the tens transfer and a bevel gear 124, with which latter the gear mountings 125 are coordinated, which are mounted non-rotatably but longitudinally slidably on the square shafts 126 extending coaxially with the shafts 50. Each mounting 125 is provided with a pair of bevel gears 127 and 128.

Engaged in the annular grooves 129 of the gear mountings 125, is the common bar 130 which is mounted on the machine frame and is slidable transversely to the longitudinal axis thereof. The bar 130 is shifted by means of two pins 132 on the shaft 131 which engage in corresponding bores in the bar 130.

Affixed to one end of the shaft 131 is a plate 133 provided with the pins 134 and 135, with which the shoulders 136 and 137 of a lever 138 cooperate. Lever 138 is journalled together with the lever 32, at 33, on the plate 34. The lever 138 is pivoted by the lever 139 which engages therewith by means of a pin 140 disposed in a slot 141 provided in the lever 138. Lever 139 is journalled at 142 in the machine frame and connected with another lever 143. The latter is connected by a link 144 with a double armed lever 145.

which is journalled at 146 in the machine frame. At the ends of the lever 145, pins 147 are provided which engage the slots 149 of a rocking plate 150. The rocking plate 150 is pivoted at 151 to the bar 22.

Through the elements 139—150 above described, the rocking movement of the lever 138 is simultaneously combined with the rocking movement of the lever 32. The movements of the levers 32 and 138 relative to each other can be reversed by means of the reversing members 145—150.

Means controlling carriage shift mechanism

The two carriage shift keys 5 are mounted on two adjacent levers 152 and 153 which are oscillatably mounted on the pins 154 attached to the machine frame. A traction spring 155, which tends to hold the lever 152 in the position shown in Fig. 2, engages the lever 152 of the key 5, which initiates the movement of the carriage to the right.

A plate 156 is also mounted rotatably on the pin 154 and this plate carries a pin 157 which extends into the path of movement of the lever 152. By means of a pressure spring 159 acting on an extension 158 of the plate 156, the plate 156 is urged to the position shown in Fig. 2. On depressing the corresponding carriage shift key 5, the plate 156 is rocked in the direction of the arrow shown in Fig. 2, so that the detent shoulder 160 of the plate 156 releases the square pin 161 on the lever 162.

Lever 162, journalled at 163 in the frame wall 14, can thereby rock downwardly under the action of the strong traction spring 164. A pin 165, attached to a lever 166, engages under the lever 162. Lever 166 is carried by the shaft 167 journalled in the wall 14, to which shaft 167 the lever 168 is affixed. This pair of levers 166 and 168 is rocked by the action of the spring 164 into the position shown in Fig. 9, and a pin 169 attached to the end of the lever 168 moves in the oblong slot 170 of a thrust rod 171. In this rocking movement of the pair of levers 166 and 168, the end of the lever 168 contacts with the lever 16 and rocks it to the dot and dash position shown in Fig. 19A, and the machine is set in operation by means of shaft 17.

A pair of levers 174 (see also Fig. 9) are journalled at 172 and at 173 on the lever 162. Through the action of the spring 175 engaged therewith, these levers are applied against a pin 176 affixed to lever 162. The ends of levers 174 receive the projecting extension 177 of a bar 178 between them. The bar 178 has a slot 179 through which a pin 180 attached to the lever 162 extends. The other end of the bar is pivoted to a slidable bar 182 by means of a pivot pin 181. The shift of the carriage is controlled by the movement of the bar 182.

Carriage shift mechanism

The following means serve for the shifting of the carriage. A spur gear 183 (see Fig. 18) meshing with a spur gear 184 of equal dimensions is affixed at the end of the shaft 53 at the extreme right as shown in Fig. 1, and this shaft is extended almost to the rear wall of the calculating machine. The spur gear 184 is fixed to a shaft 185 journalled in the machine frame and the shaft 185 has fixed thereto a clutch element 186. Slidably mounted on the shaft 185 is a spur gear 187 which is connected with the cooperating clutch element 188. The spur gear 187 is provided with an annular groove in which the bifurcated end 189 of a plate 190 enga The plate 190 is mounted on the slidable bar The spur gear 187 meshes with a spur gear which in turn meshes with another spur 192 which is journalled on a pivot pin 193 tached to the machine frame. The spur 192 is provided with two diametrically opp pins 194 which cooperate with the shift slots of a bar 196 connected to carriage 2.

If, through the traction of the spring 164 lever 162 is rocked into the position of F then, through the action of one of the levers the bar 178 is drawn to the left, from the tion shown in Fig. 2, so that the plate 1 carried to the dotted line position shown in 2, and the two clutch elements 186 and 188 ir engage. The drive motor being set in opera simultaneously, the gear 183 is rotated in th rection of the arrow in Fig. 18, and, through intermeshing gears 184, 187 and 191, the 192 is rotated in the direction of the arro Fig. 18. The rotation of the gear 192 shifts carriage 2 in the direction of the arrow in 18, which constitutes an advance to the righ one decimal position with respect to Fig. 1.

The drive control mechanism

The driving means are controlled as foll Affixed to the shaft 17, at the left side of machine as shown in Fig. 1 is a lever 493 Figs. 19 and 19A) to which is engaged a trac spring 494 which tends to retain the lever in the full line position shown in Fig. 19A. oted to the free end of the lever 493, at 49 one end of a bar 496, which is connected at other end, by means of the pivot pin 197, wi bell crank lever 199, which is oscillatably j nalled on the pin 199 fixed to the wall 43.

Attached to the free end of the lever 198 pin 200 contacting one end of a double ar lever 201, which latter is pivoted at 202 on other lever 203 which in turn is journalle means of the pivot pin 204 to the wall 43 traction spring 205 engages the free end of lever 201 and tends to apply the other end o lever 201 against the pin 200. A pin 206, lever 207, engages under the lever 201. 207 is oscillatably journalled by means of a 208 in the wall 43 and is subject to the actio a traction spring 209 which tends to rock lever 207 upwardly.

Lever 207 is also provided with an abut 210 which serves as a lock for a shoulder extension 211 provided on a lever 212 mou on the shaft 213 journalled in the wall 43. other levers 214 and 215 are also attache the shaft 213. Engaged with the lever 215 traction spring 216 which tends to rotate t three layers clockwise as shown in Fig. 19. tached to the end of the lever 214 and insul therefrom is the contact member 217 which, the lever is swung, bridges the contacts fo by the contact springs 218 and 219 in the ci of an electric motor 44.

A projection 220 of the lever 115 extends the path of movement of the coupling me 221, which is pivoted by means of the pivot 222 on a disc 223 attached to the main drive s 65. A pressure spring 224 engaged with member 221 tends to press the friction su 225 of such member into the wedge-sh groove 226 of a collar 227 provided on a spur 228. Through the coupling 221 the shaft always stopped in a certain predeterm position.

Affixed to the shaft 65 is a cam 229 with which a roller 230 journalled on the lever 203 cooperates. A traction spring 231 connected to the lever 203 holds the roller 230 engaged with the cam 229. It is to be noted that the extension 211 also extends into the plane of the lever 201 which is provided with a locking shoulder 232 cooperating therewith.

The spur gear 228 is freely rotatable on the shaft 65 and carries the collar 227. A spur gear 233 which is fixed on the shaft 234 journalled in the machine frame meshes with the spur gear 228. Shaft 234 carries a belt pulley 235 which is connected by a drive belt with the pulley 237 on the motor shaft.

Multiplier key mechanism

Coordinated with the calculating machine above set forth are the multiplier setting keys 238 which, as shown particularly in Fig. 1, are arranged in two parallel adjacent rows. Each key 238 with the exception of the "0" key is mounted on a key stem 239. The stem 239′ of the "0" key has a somewhat different form than the other stems (see particularly Figs. 3, 12 and 13).

The upper ends of the stems 239 and 239′ are guided in the guide slots provided in a plate 240. The lower ends of the stems are guided in correspondingly shaped slots in a plate 241 which is disposed parallel to the plate 240. The plates 240 and 241 are connected together by the blocks 242 which are attached to a vertical plate 243 which in turn, as shown in Fig. 1, is supported by the two arms 244 on the machine frame. The stems 239 and 239′ are provided with lateral extensions 245, against the lower edges of which bear the upper ends of the pressure springs 246. The springs 246 are carried by the stems, and at their lower ends bear against the guide plate 241.

Disposed below the key stems 239 of the keys "1"–"5" is a bar 247 which is carried by the two links 248. The lower ends of the stems 239 of the keys "6"–"9" have coordinated therewith a corresponding bar 249 carried by the links 250. The stem 239′ of the "0" key is provided with a recess 251 of such shape that when this key is depressed, the stem 239′ freely passes the bar 249. The link members 250 and 248 are mounted oscillatably, at 252, on the lower guide plate 241.

The setting member and cooperating parts

Between the two rows of key stems a square cross-sectional tube 253 is longitudinally slidably disposed, and is guided between the blocks 242. The tube is provided with recesses 254 which align with the key stems when the tube 253 is in the position shown in Fig. 3, so that the extensions 245 of the stems 239 and 239′ may pass freely into the interior of the tube.

The tube is, also, provided on both sides with window-like recesses, of which the recesses 255 coordinated with the "5" and "6" keys have a width in the direction in which the tube moves, to accommodate six separate shift movements of the tube. The recesses 256 coordinated with the keys "4" and "7" have a width which accommodates five seperate shift movements of the tube 253. The widths of the window-like recesses 257 coordinated with the keys "3" and "8" correspond to four shift movements, and those of the recesses 258 coordinated with the keys "2" and "9" correspond to three shift movements. The recess 259 coordinate with the stem 239′ extends to the window-like recess 258 on the corresponding side, while the recess 260 coordinated with the key "1" has a width extending longitudinally of the tube 253 which corresponds to two shift movements of the tube 253.

Attached at the right end of tube 253 is a pin 261, as shown in Figs. 3 and 4, with which a traction spring 262 is connected. The traction spring is connected at the other end, at 263, to the machine frame, and urges the tube 253 in the direction of the arrow in Fig. 3.

In the initial position shown in Fig. 3, the tube is held by a pivoted locking lever 264 which is journalled in the bearing block 265 extending downwardly from the tube 253 and, through a torsion spring 266, the lever 264 is given a tendency to swing upwardly. The front and free end of the locking lever is applied against an abutment 267 provided on the plate 241 forming the terminal of a groove 268 (see Fig. 15) provided in the plate 241. Attached to the tube 253 is a rack 269 which extends downwardly through the slot 268 of the plate 241 and meshes with a spur gear 270. The latter is journalled on a spindle 271 fixed to the frame plate 243 and connected by a tubular housing 272 with a ratchet wheel 273.

Provided on one side of the ratchet wheel 273 is a pin 274 with which an extension 276 provided on a lever 275 cooperates. Lever 275 is oscillatably journalled at 277 on the plate 243 and is provided with another extension 278 in which a V-shaped recess is provided with which the correspondingly formed end 279 of a double armed lever 280 engages. The lever 280 is journalled on a pin 281 fixed to the frame plate 243. Connected to the lower end of the lever 275 is a traction spring 283 which has its other end connected at 282 to the frame plate, and which tends to rock the lever 275 clockwise as seen in Fig. 3. The lever is, however, held in the checked position shown in Fig. 3 by the cooperation of the lever end 279 and the extension 278. Also attached to the lever 275 is a pin 284 which passes through a recess 285 of the frame plate 243 and to which one end of a bar 286 is pivoted. Bar 286 has a slot-like recess 287 through which a pin 288 attached to frame plate 243 passes. An extension 289 is provided on the bar 286 and projects upwardly so as to come within the path of movement of a pin 290 provided on the lever 16.

A traction spring 292, connected at 291 to the frame plate, and connected to the lever 280 tends to swing it in the direction of the arrow in Fig. 3. A double armed lever 293 is journalled at 294 on a downward extension of the lever 280 and has a hook-like form on its upwardly extending arm 295. A traction spring 296 is connected to the arm 295 and is connected at 297 to the lever 280 and urges the lever 293 against a stop 298 provided on the lever 280.

Fixed on the guide plate 241 is a bearing block 299 which carries the pivot pin 300 for a lever 301, the free end of the latter being provided with a pin 302 which extends below both of the bars 247 and 249 (see Fig. 14). A spring 303 is connected at one end to the lever 301 and at the other end is connected to the plate 241, and tends to hold the lever 301 in the initial position shown in Fig. 3. Journalled on the lever 301 by means of the pivot 304 is a pawl plate 305 to which is connected one end of a traction spring 306 while the other end is attached to the lever 301, and which tends to apply the right-angularly bent end 307 of the pawl plate against the upper edge of the lever 301, so that the upwardly extending, hook-shaped end 308 of the pawl plate 305 extends within range of

the hook-like extension 309 provided on the lever 264.

An angular bar 312 has a slot 313, through which a pin 314 attached to the frame plate 243 passes and is connected to the bar 249 which, like the bar 247, is held in its initial position by the springs 310. A corresponding bar 315 is pivoted to the bar 247 and also has a slotted end engaging the pin 314. Fixed to the bar 312 is a pin 316 with which the obliquely extending surface 317 of a lever 318 cooperates.

Lever 318 is connected by a tubular housing 319 with a lever 320 whose obliquely extending surface 321 cooperates with a pin 322 corresponding to the pin 316, and attached to the bar 315. The housing 319 is fixed on a shaft 319′ journalled in the frame plate 243, and this shaft also carries the lever 323, to the end of which, by means of the pin 324, is pivoted a plate 325 which is provided at its free end with two oppositely extending recesses 326 and 327 which have V-shaped guiding margins (see Fig. 2A).

The plate 325 is provided with a slot 328 in which a pin 329 engages. The latter is disposed slidably in a slot 330 with the cooperation of a drag spring (not shown), and the slot 330 is provided in a frame plate 331. If the plate 325 is in the position shown in Fig. 2A the recess 326 engages over a pin 332 which, together with another pin 333, is attached to the plate 334. Plate 334 is mounted on a shaft 335 journalled in the wall 14 and the shaft 335 also carries a lever 336. The bifurcated end 337 of the lever 336 engages the pin 25 on the end of the bar 22.

Journalled oscillatably on the pin 281, in addition to the lever 280, are two other three-armed levers 338 and 339, of substantially the same form. Attached to the arm 340 of the lever 338 is a pin 341 which extends into the plane of movement of the bar 249, while the arm 340 of the lever 339 carries a pin 342 which extends into the plane of movement of the bar 247. A bell crank pawl lever 344 is pivoted at 345 to each arm 343 of the levers 338 and 339 and the hook-shaped upper ends 346 cooperate with a pin 347. The free end of each pawl level 344 is provided with a pin 348 against which the torsion springs 349 are applied and which tend to rock the pawl levers in the direction of the arrow in Fig. 3.

In the inoperative position, the arms 343 of the levers 338 and 339 are applied against a pin 350 attached to the frame plate 243.

Lever 338 carries an upwardly directed arm 351, while the lever 339 has a corresponding upwardly directed arm 352. The levers 338 and 339, which are substantially of the same form, differ, as shown particularly in Fig. 3, only in that the arm 351, as compared with the arm 352, projects further to the left, for the distance of a shift movement, and both arms project into the movement plane of the rack 269 attached to the shift tube 253.

The pin 347 cooperating with the pawl levers 344 is attached, right angularly projecting, to the end of a lever 353 and passes through a rectangular recess 354 of the plate 243. Lever 353, whose projecting shoulder 355 cooperates with an abutment pin 356 attached to the plate 243, is pivoted at 357 to the upwardly directed arm 358 of a three-armed lever 358, 359, 360, which is journalled by means of the pin 361 oscillatably on the plate 243. See Figs. 2, 8 and 9. The second arm 359 of this lever extends into the movement plane of a pin 362 which is provided on the lever 363. The lever 363 is fixed on a shaft 364 journalled in the machine frame and which carries another 365, at the end of which latter lever 365 the a pin 366 which passes through a slot 367 at end of a bar 368. The bar 368 engages the 156 by means of the pivot pin 369. Pivoted to third arm 360 of the three-armed lever 358— at 371, is another lever 370, with which the engaged a torsion spring 372 which tends to the inclined end of the lever 370 against a 373 provided on the frame plate 243.

Lever 370 is provided with a finger-like ex sion 374 which cooperates with a finger-like tension 375 which is connected with the d wardly extending lever 323.

The end of the lever arm 359 extends w the operative plane of a chisel-like extension provided on a bar 376, which latter is guided ably on the two pins 378 attached to the fr plate 243 and which pass through two elong slots 379 in the bar 376. The bar 376 is prov with a downwardly directed extension 376′ 7) which extends into the movement plane pin 380 attached to the thrust rod 171 w latter, by means of a bearing eyelet 381, en passes an eccentric 382 which is attached to main drive shaft 65 journalled in the mac frame. As shown in Fig. 2 a spur gear 383 i tached on the shaft 65 and meshes with the gear 384 attached on the main calcula shaft 37.

Totaliser and revolutions counter disconne means

The cam 38 is mounted freely rotatable o shaft 37 and is provided with a coupling 385 which is pivoted at 386 on the disc 38. gaged with one end of the jawl 385 is a leaf sp 387, attached to disc 38, which tends to the shoulder-like projecting end 388 into a r 389 of a drive disc 390, which is rigidly conne with the main calculating shaft 37.

Coordinated with the pawl 385 is a roller which is journalled on the upwardly exter end of a double armed lever 392, which is c latably attached to the machine frame by m of the pivot 393. The lower end 394 of the 392 extends into the movement plane of a sl der-like extension 395 provided on the end bar 396, which has an oblong opening 397 thr which a pin 398 attached to the frame wal tends. The other end of the bar 396 is pi to the pin 169.

Ratchet shifting means

A traction spring 401, fastened at one en the plate 243 and at the other end to the ba at 400, tends to apply the extension 376′ stantly against the pin 380 (Fig. 7). A pawl lever 403 is journalled on the bar 37 means of the pivot 402 and is provided wi shift tooth 404 extending through a corresp ing opening provided in the frame plate 243 gaging in the corresponding denture of the rat wheel 273. A spring 403′ engaged with paw tends to apply it against a pin 403″ attache the bar 376 (Fig. 7).

Multiplier keys stop means

As shown in Figs. 12, 13, 14 and 21, the coordinated with the key row "6"–"0" a stop 405 having oblong openings 406 in which pins 407, serving as guides, engage. Conne to the bar 405, at 408, is a traction spring which is connected at its other end to the 410 on the guide plate 241. This spring u the stop bar 405 in the direction of the arro

Fig. 21. In the position of the bar 405 shown in full lines in Fig. 21, the recesses 411 provided in the stop bar are opposite the key stems 239 and 239′ so that on pressing the keys the corresponding lateral extensions 245 can enter into the recesses.

The bar 405 is provided with a pin 412 which engages in an oblong opening 413 provided at one end of an actuating bar 414. The latter is connected at its angularly bent-down end 415, by means of a pivot 416, with one end of an angle lever 417 which is pivotally mounted on the machine frame at 418. The free, upwardly bent end 419 of the lever 417 extends into the movement plane of a stop bar 420 attached to the carriage 2.

The rectangularly bent end 421 of an extension 422 directed at right angles to the plane of the frame plate 243, is coordinated with the key stem 239′. The extension 422 is carried by a lever 423 which is journalled on the pivot 424 provided on the frame plate 243. Connected with the lever 423 is another lever 425 at the end of which a pin 426 is attached. The pin 426 extends through a recess 427 (Fig. 3) provided in the frame plate within range of the upper end of an angle lever 428 which is journalled at 429 on the plate 243. The free end of the angle lever 428 engages over the pin 362 on lever 363.

In order that both bars 247 and 249 cannot be depressed simultaneously by the keys the lock plate 430 is provided which is journalled by means of the pivot 431 on a downwardly extending flap 432 attached to the guide plate 241.

It is also to be noted that a pin 433 (Fig. 9) is attached to the arm 359 of the triple-armed lever 358, 359, 360 and such pin extends through a recess 434 (Fig. 4) of the plate 243 to cooperate with the downwardly extending bent end of the lever 293.

Operation

The operation of the machine is explained with reference to the following calculation: 45×703. The "5" of the key bank farthest at the right is first set up in the keyboard, and the "4" in the next adjacent key bank. The result thereof is, in known manner, that the gear 60 coordinated with the extreme right key key bank is moved on its shaft so that it comes into position opposite that part of the cooperating stepped roller 57 which has five teeth. The gear 60 coordinated with the second key bank is, on the other hand, moved on its shaft 50 so that it comes opposite that part of its cooperating roller 57 which has four teeth. It is also to be noted that the parts are at first in the basic position shown in Figs. 2, 2A, 19 and 19A.

After the multiplicand has been set up on the keyboard in the manner described, the multiplier can be set up by means of the keys 238, beginning with the lowest decimal position. Thus the "3", thereafter the "0" and finally the "7" of the highest decimal position is depressed.

Operation upon pressing multiplier key "3"

On pressing the multiplier key "3" into the position shown in Fig. 4, the lower end of its key stem 239 strikes against the bar 247 and carries it, against the action of the spring 310, into the position shown in Fig. 4. In the descent of the bar 247, the angular bar 315 connected therewith is moved into the position shown in Fig. 4, and its pin 322, contacting with the inclined surface 317 of the lever 320, holds the latter in the position shown in Fig. 4.

At the same time, the lever 301 is rocked into the position shown in Fig. 4 by the descending bar 247 striking against the pin 302. Thereby, through the cooperation of the hook-shaped end 308 and the extension 309, the locking lever 264 is swung downwardly until the front end of the lever 264 is released from the abutment 267 and the square tube 253 can then pass into the position shown on Fig. 4.

In accordance with the width of the recess 257 coordinated with the key "3", the tube 253 can move a distance equal to the left as shown in Fig. 4. As soon as the lever 301 assumes the position shown in Fig. 4, the lever 293 can rock into the position shown in Fig. 4, wherein its hook-shaped arm 295 engages over the pin 302. Shortly before the bar 247 attains the end position shown in Fig. 4 its right end contacts with the pin 342 of the lever 339, whereby the latter is rocked into the position shown in Fig. 4, in which the pawl 344 pivoted thereto, engages by its hook-shaped end 346 over the pin 347.

As soon as pressure is removed from the "3" key it can return to the intermediate position shown in Fig. 5, wherein the lateral extension 245 of its key stem 239 is applied against the upper edge of the tube recess 257. By the return of the key stem to the intermediate position of Fig. 5, the bar 247 and the lever 301 also rock back into the position of Fig. 5. In doing so, however, the lever 301, by means of the pin 302, carries the lever 293 along upwardly, which in turn moves the lever 280 into the position of Fig. 5. This releases the extension 278 of the lever 275, which then, under the traction of the spring 283, rocks into the position shown in Fig. 5, and moves the bar 286 connected with the lever 275 into the position of Fig. 5.

In this movement of the bar 286 the upwardly directed extension 289 strikes against the pin 290 on he lever 16 and swings the lever 16 into the position of Fig. 5. Referring to Figs. 19 and 19A, this means that the lever 16 moves from the base position shown in dotted lines into that shown by dot and dash lines. As the lever 16 is connected by the shaft 17 with the lever 493, the latter is swung into the position shown in dot and dash lines. This moves the rod 496 and pivots the lever 198 to the dot and dash line positions. When the lever 198 is pivoted, the lever 201 is moved by means of the pin 200 into the position of Fig. 20. This, through the pin 206, results in the simultaneous rocking of the lever 207 into the position of Fig. 20.

As soon as the lever 207 reaches the position of Fig. 20, its shoulder 210 releases the extension 211, so that the three interconnected levers 212, 214 and 215, under the action of the traction spring 216, rock into the position of Fig. 20. The contact springs 218 and 219 are thereby bridged by the contact member 217, so that the circuit of the electric motor 44 is closed. The electric motor then revolves the shaft 234 in the direction of the arrow in Fig. 19. The projection 220 on the lever 215 has released the coupling member 221 at the same time and the disc 223 and the collar 227 are coupled together with the result that the shaft 65 is rotated in the direction of the arrow in Fig. 19.

During the course of the first revolution of the main shaft 65 (see Fig. 7) the pin 280 on the thrust rod 171 contacts with the downwardly directed extension 376′ of the slidable bar 376, and such bar is moved against the traction of the spring 401, in the direction of the arrow in

Fig. 7. The shift tooth 404 on the bar 376 contacts an opposing tooth of the ratchet wheel 273 and turns it back for one shift movement toward the initial position. The tube 253 is, therefore, moved back to the right from the position shown in Fig. 4 for one shift movement by means of the rack 269 and the gear 270.

During the second half of the first revolution of the main shaft 65, the thrust rod 171 is carried to the left with respect to Fig. 2, and the bar 376 also moves back to its initial position. Inasmuch as the bar 289 is still in the position of Fig. 5 at the end of the first revolution of the main shaft 65 the motor circuit remains closed, so that the main shaft passes at once from the first to the second revolution. During the second revolution of the main shaft, the ratchet wheel is moved back for another shift step. This is repeated twice more before the machine comes to a standstill.

It is to be noted that after the second shift, thus during the second revolution of the main shaft, the tube 253 has been moved back into the position of Fig. 8, in which position the right edge of the rack 269 almost contacts with the upwardly directed extension 352 of the lever 339. During the first half of the third revolution, the bar 376 is moved to the right and through the shift tooth 404, the ratchet wheel 273 is shifted back for the third shift movement. During the accompanying shift movement of the tube 253 the right end of the rack 269 strikes against the end 352 of the lever 339 and rocks it into the position shown in Fig. 9, and the pawl lever 344 on the lever 339 carries the lever 353 therewith downwardly so that its shoulder 355 is released from the abutment pin 356. The three-armed lever 358, 359, 360 then swings under the traction of its spring 435 and applies its upper end 436 against the extension 377 of the bar 376.

During the second half of the third revolution of the main shaft the bar 376 is moved back to the initial position of Fig. 2 on the movement to the left of the thrust rod 171. Lever 358, 359, 360 rocks into the position shown by dotted lines in Fig. 9. The pin 433 on the triple-armed lever strikes against the angularly bent down lower end of the lever 293 and the lever 293 is swung into the position shown in Fig. 9. In this position, the hook on the arm 295 releases the pin 302, so that it may move against the bar 247 which is still in the intermediate position shown in Fig. 5. In this rocking of the triple-armed lever 358, 359, 360 into the dotted position of Fig. 9, the lever 370 pivoted to the lever arm 360 moves to the dotted position shown in Fig. 9, and the extension 374 on the lever 370 passes freely by the extension 375.

In addition, the levers 363 and 365 are rocked into the position of Fig. 9 in the rocking of the three-armed lever 358, 359, 360, since the lever arm 359 strikes against the pin 362. In this rocking movement, by means of the bar 368 the plate 156 is rocked into the position of Fig. 9, in which its detent shoulder 160 releases the square pin 161.

Through the release of the pin 161, the lever 162 may rock into the position of Fig. 9, under the traction of the spring 164 engaged therewith. In this movement of the lever 162, the bar 178, by means of one of the levers 174, is moved to the left from the position shown in Fig. 2, and the bar 182 with the parts connected thereto move into the dotted position of Fig. 2. The spur gear 187 is thus moved on the s 185 so that the clutch elements 186 and 188 in engage.

At the same time, however, in the rockin the lever 162, it strikes against the pin 16 that the pair of levers 166 and 168 are ro into the position of Fig. 9. In this rocking m ment of the levers 166 and 168, the pin 16 the lever 168 moves the bar 396 into the tion of Fig. 9, and the shoulder 395 on the 396 carries the lever 392 into the position sl in Fig. 9. The roller 391 on the lever 392 the passes into the range of the coupling pawl

If, at the end of the third revolution of main shaft, the end of the coupling pawl comes within the range of the roller 391, coupling pawl is swung into the position of F against the pressure of the spring 387, and projecting end 388 on the lever 385 is swung of the recess 389 of the drive disc 390.

During the fourth revolution of the main s the cam 38 therefore remains stationary the rocking plate 34 and the levers 32 and connected therewith remain in the initial tion shown in Fig. 2. This means, however, during the fourth rotation of the main sha the bars 42 and 130 are not moved from median position and the gear mountings 47 125 are not moved and remain in neutral tion. Nevertheless although the gear moun 47 and 125 are rotated by the main calcul shaft 37, there is thus no transfer into the during the fourth revolution of the main s On the other hand, by the engagement of clutch elements 186 and 188, the spur gear is set in rotation which, through the interp gear 191, causes a half revolution of the riage shift gear 192. During the fourth re tion of the main shaft, the carriage is mov the right, from the position shown in Fi for one decimal position.

During the first half of the fourth revol of the main shaft 65 the ratchet wheel 273 been moved by the shift tooth 404 back to initial position shown in Fig. 3. In such m ment the pin 274 on the ratchet wheel 273 st against the extension 276 of the lever 275 swings it back into the initial position show Fig. 3, and the end 279 of the lever 280 m as a support, into the V-shaped recess in extension 278 of lever 275. As the lever 275 a moves into the initial position of Fig. 3, the 286 is also drawn back into the initial pos so that its extension 289 releases the pin 28 the lever 16.

As the lever 16 is returned through the tra of the spring 494 to its initial position, the the same time, the pin 200 is returned to th itial position shown in Fig. 19 by the bar 496 the lever 198. The pin 200 releases the lever which is rocked upwardly counter-clockwis the traction of the spring 205, and the lo shoulder 232 moves to a position in front o extension 211.

Shortly before the termination of the fo revolution of the main shaft, the lever 2 swung to the left by means of the cam 229, the position shown in Fig. 19 and the sho 232 carries along the lever 212 and the l 214 and 215 connected therewith to the i position shown in Fig. 19. After the passa the high point of the cam 229, the lever swings back to the initial position under traction of the spring 231 and the abutmen of the lever 207, which has been released b

lever 201, locks the extension 211, so that the three levers 212, 214 and 215 are held in the initial position shown in Fig. 19.

This, however, means that the circuit for the electric motor 244 is broken at the contact springs 218 and 219, and the connection between the disc 223 and the spur gear 228 is interrupted. As shown in Fig. 19, the shoulder 220 of the lever 215 has moved into the path of the coupling member 221, and the latter has been moved into the uncoupling position against the pressure of the spring 224. The machine is thus brought to a stop after the fourth revolution of the main shaft. The totaliser shows a value of "135", while a "3" appears in the revolutions counter.

In the last shift movement of the ratchet wheel 273 into the initial position the tube 253 was also moved back to its initial position as shown in Fig. 3. In this position, the slot passage 254 of the corresponding recess 257 is in the plane of the stem 239 of the key "3" so that the stem snaps back to the initial position under the action of the spring 246 associated therewith. The machine is thus ready for receiving the next multiplier digit.

It is to be noted that during the first half of the fourth revolution of the main shaft, while the bar 376 is carried to the right by the thrust rod 171, the extension 377 of the bar strikes against the upper end 436 of the three-armed lever 358, 359, 360 and moves it back to the initial position, and the shoulder 355 of the lever 353 hooks in behind the abutment pin 356. At the same time the pin 347 is positioned in front of the pawl lever 344 again, as shown in Fig. 3.

Operation upon pressing multiplier key "0"

The second, or the tens digit of the multiplier is then carried into the machine, by depressing the multiplier key "0". When this key is depressed there is no simultaneous downward movement of the coordinated bar 249 because the key stem 239' is provided with a recess 251 to avoid this. On pressing this key, the lever 301 which releases the locking lever 264 is not carried along downwardly therewith. The tube 253 remains in the initial position.

On the other hand, the key stem 239' strikes the end 421 of the extension 422 of the lever 423, the levers 423 and 425 are moved to the positions shown in full lines in Fig. 16. Through this movement of the lever 425 the lever 363 is rocked clockwise by the pin 426 and the cooperating bell crank lever 428 as shown in Fig. 16. In this rocking movement, the plate 156 is carried by the connecting bar 368 into the position of Fig. 9, in which position the detent shoulder 160 thereon releases the pin 161. Through the release of the pin 161, the lever 162 can likewise rock to the position of Fig. 9 which, through the bar 178, couples the clutch elements 186 and 188.

Simultaneously with the rocking movement of the lever 162, the levers 166 and 168 are swung into the position of Fig. 9 and the bar 396 is carried into the position shown in Fig. 9. The lever 392 is pivoted moving the roller 391 to depress the end of the pawl 385 to uncouple the end 388 from the recess 389.

Furthermore, as a result of the rocking of the lever 168, the lever 16 has been moved to the position shown in dot and dash lines in Fig. 19 and through the bar 496 and the lever 198 the electric motor's circuit is closed and the disc 223 and collar 227 coupled together.

Through the pivoting of the levers 423, 425 and 428 following the pressure on the multiplier key "0" the machine is set in operation, but with the cam 38 disconnected, so that the dials of the totaliser and the revolutions counter are not actuated. On the contrary, however, on the rotation of the main calculating shaft 37 and the corresponding shaft 53, the carriage is shifted one decimal place to the right with reference to Fig. 1 by the coupling of the clutch elements 186 and 188.

If, as in the present case, only a "0" is to be transferred then, after a short pressure on such key, the latter is at once released. After the release of the "0" key, the traction spring 437 acting on the angle lever 428 returns the levers 423 and 425 again to the initial position, as shown by the dotted lines in Fig. 16. The pin 362 is also released, and the stop plate 156 rocks through the action of the pressure spring 159 into the intermediate position shown in Fig. 9, in which the plate 156 has its curved part 433 applied against the pin 161.

Slightly after the main shaft 65 has described a half revolution the levers 166 and 168 are swung by the thrust rod 171 to the right, and the pin 165 engaging under the lever 162 swings the latter upwardly so that the square pin 161 comes in front of the shoulder 160 of the lever 156. As soon as this occurs, the plate 156, through the action of the spring 159, snaps into the initial position as shown in Fig. 2, in which the lever 162 is held, against the traction of spring 164.

When the levers 166 and 168 are rocked into the initial position of Fig. 2, the lever 16 is also released and the lever 493 returns to the initial position shown by the full lines in Fig. 19A. This position requires, however, that the pin 200 on the lever 198 be in the position shown in full lines in Fig. 19 with the result that on the termination of the revolution, the motor current is broken and the extension 220 which disconnects the clutch comes into operative position. Thus, after the carriage has made a further shift movement to the right, the machine is brought to a stop. The "1" of the value "135" in the totaliser is thus moved to a position opposite the extreme right hand bank of the keyboard.

Operation upon pressing multiplier key "7"

To complete the calculation, it is now only necessary to carry the digit in the hundreds position of the multiplier into the machine, which is done by pressing the multiplier key "7." On pressing the "7" key to the lower position shown in full lines in Fig. 6, the lower end of its key stem 239 moves the bar 249 into the position shown in Fig. 6.

As the pin 302 on the lever 301 also engages under the bar 249, the lever 301 is simultaneously rocked against the traction of the spring 303 into the position of Fig. 6. The hook shaped end 308 therefore swings the lever 264 downwardly and the front end thereof is released from the abutment 267. The tube 253, then moves into the position of Fig. 6 under the action of the spring 262.

In this position of the tube, the right edge of the window-like recess 256 is applied against the key stem extension 245 which has been moved through the slot passage 254 into the interior of the tube. In accordance with the width of the window-like recess 256, the tube moves from its initial position five shift movements to the left and the rack 269 cooperating with the gear 270

rotates the ratchet wheel 273 into the position shown in Fig. 6.

Through the descent of the bar 249, the bar 312 pivoted thereto has been moved into the position of Fig. 6, and the pin 316 on the bar 312, in cooperation with the surface 317 on the lever 318, has swung the three interconnected levers 318, 320 and 323 into the position of Fig. 6. In the rocking movement of the lever 323 from the dotted line position into the full line position, (see also Fig. 17) the bar 22 moves into the position shown in full lines in Fig. 17 through the action of the elements 325, 332, 334 and 336. The result of this is that the lever 32 is rocked downwardly by the levers 27 and 29, and the lever 138 is rocked downwardly by the levers 143 and 139, whereby the lower shoulders 32'' and 136 of the levers 32 and 138 are positioned in front of the pins 39'' and 134. Thus, when the cam 38 is set in operation, the bevel gear mountings 47 and 125 are negatively connected with the dial bevel gears 61 and 124 of the totaliser and revolutions counter, that is, the control bars 42 and 130 are moved in such manner that the bevel gears 48 and 128 become operative.

Shortly before the bar 249 reaches its lowermost end position, its right end strikes against the pin 341 of the lever 338 and rocks it into the position shown in Fig. 6, in which position the shoulder 346 of the pawl lever 344, pivoted to the lever 338, engages over the pin 347.

It is to be noted that in the downwardly swung position of the lever 301, the pawl shoulder 295 lies over the pin 302. If now the depressed key is released so that it can return to the dotted position of Fig. 6 then, in the consequent swinging of the lever 301 to the dotted intermediate position of Fig. 6, the lever 280 is in the position shown in Fig. 6 by the lever 293. In this position the end 279 on the lever 280 releases the extension 278 of the lever 275 so that the latter can swing into the position of Fig. 6 under the traction of the spring 283 engaged therewith. In this position, the extension 278 of the lever 275 which is formed as a stop pawl engages in the teeth of the ratchet wheel 273.

In the rocking movement of the lever 275 into the position shown in Fig. 6, the bar 286 is moved to the left so that the machine is set in operation through the lever 16, shaft 17 and lever 493 in the manner above described.

Inasmuch as in the preceding rotation of the main shaft 65 the levers 166 and 168 were swung back by the thrust rod 171 into the initial position shown in Fig. 2, the bar 396 was also carried back to the initial position shown in Fig. 2. This, however, caused the lever 392 to be released by the shoulder 395, so that it could rock under the traction of its spring 439 into the initial position shown in Fig. 2. Thus, for the next operation of the machine, the coupling pawl 385 is in the operative position as shown in Fig. 2.

During the first revolution of the main shaft the multiplicand "45" (4500) is subtracted from the value "135" in the totaliser, so that at the end of the first revolution of the main shaft the value 9 999 995 635 appears in the totaliser. At the same time the ratchet wheel is turned back for one shift by means of the bar 376 and the shift tooth 404 during the movement to the right of the thrust rod 171, which takes place on each revolution of the main shaft 65, so that the ratchet wheel moves into the position shown in Fig. 5.

At the end of the first revolution of the main shaft, since the lever 275 and the bar 286 still in the position of Fig. 6, the main shaft at once moves from the first into the sec revolution. During the second revolution, multiplicand "45" (4500) is again subtracted that at the end of the second revolution of main shaft, the value 9 999 991 135 appears.

During the third revolution of the main sh during which the ratchet wheel 273 is tur back for a third shift movement, the multiplic is again subtracted, so that at the end of third revolution of the main shaft, the va 9 999 986 635 appears in the totaliser.

During the third revolution of the main sh the tube 253 is carried from the full line into dotted line position of Fig. 10. The right en the rack 269 therefore strikes against the 351 of the lever 338 and rocks it into the dot line position of Fig. 10, in which movement of lever 338, the pawl lever 344 thereon carries pin 347 along therewith, so that the lever 35 swung into the dotted line position of Fig. In this position, the hook-shoulder 355 of lever 353 is drawn away from the abutment 356. The lever 358, 359, 360 is therefore hel the initial position only by the extension 377 the bar 376, as indicated by the full line posit in Fig. 9.

In the second half of the third revolution the main shaft, the bar 376 returns to the ini position and the extension 377 releases the th armed lever 358, 359, 360 so that the latter rock into the dotted line position of Fig. 9.

By this movement of the lever 358, 359, the machine is set for a carriage shift movem in the manner above described and this ta place in the fourth revolution of the main sh The thousandths position of the totaliser t appears over the right hand key bank of the k board.

It must be also noted that in the rock movement of the three-armed lever 358, 359, which takes place during the second half of third main shaft revolution, the lever 370 is c ried into the position shown in full lines in 11, in which the finger-like extension 374 is p tioned in front of the finger-like extension of the lever 323.

During the fourth main shaft revolution, which the carriage is shifted, the bar 376 is c ried into the dotted line position of Fig. 11. extension 377 on the bar 376 moves the lever 359, 360 into the dotted line position of Fig. (initial position). In this movement the le 353, which was in the meantime released by lever pawl 344, again positions its shoulder in front of the abutment pin 356. Also when three-armed lever 358, 359, 360 was swung i the dotted line position of Fig. 11, the lever connected therewith, by means of its extens 374 swings the extension 375 and the lever connected therewith, into the dotted line posit of Fig. 11.

Through this rocking movement of the le 323 into the dotted line position of Fig. 11, wh corresponds to the position shown in Fig. 2, levers 32 and 138 are pivoted upwardly by me of the elements 325, 332, 336, etc. into the p tion shown in Fig. 2 in which the totaliser the revolutions counter are in position for p tive operation.

At the same time, the three-armed lever 359, 360 which has moved to the initial posit has released the pin 347, so that the lever may move into the locked position. At the

of the fourth revolution of the main shaft the parts are thus again in the position shown in Fig. 2.

During the fourth revolution of the main shaft however, the ratchet wheel 273 has been turned back for a fourth shift and it is now still one shift from its initial position.

The main shaft thus passes at once from the fourth rotation into the fifth, and the multiplicand is carried once, positively, into the totaliser in accordance with the position above set forth of the levers 32 and 138. At the end of the fifth rotation, the result in the totaliser is 31 635.

During the fifth revolution of the main shaft the bar 376 is again carried to the right from the position shown in Fig. 2 and the ratchet wheel is shifted back to the initial position shown in Fig. 3. The pin 274 on the ratchet wheel 273 strikes against the extension 276 of the lever 275 and swings it to the initial position shown in Fig. 3. This takes place with a tensioning of the spring 283 and a simultaneous movement of the bar 286 to the initial position, in which the upwardly directed extension 289 of this bar releases the pin 290 so that the lever 16 may rock back to its initial position. The return of the lever 16 to the initial position causes the elements shown in Figs. 19 and 19A to be returned to their initial positions which brings the machine to a stop at the end of the fifth revolution of the main shaft. As soon as the tube 253 is returned to its initial position, during the last revolution of the main shaft, the extension 245 on the depressed key stem can pass through the recess 254 and thus the key "7" returns to its initial position.

Multiplier key lock operation

For the case in which the multiplier has seven positions, that is, as many decimal positions as there are in the revolutions counter 3, the stop device shown in Fig. 21 is employed. The purpose thereof is to prevent a key being depressed in the seventh decimal position of the multiplier whose value is greater than "5." In such case, as soon as the carriage 2 describes its last shift movement and moves from the sixth to the seventh decimal position, the stop bar 420 affixed on the upper side of the carriage comes in contact with the end 419 of the lever 417 and swings it into the dotted position of Fig. 1, thereby moving the bar 414 into the dotted line position of Fig. 21. The stop bar 405 is thereby left to the traction of spring 409 engaged therewith. If the value of the sixth multiplier position should correspond to a key value of the key row "6"–"0" then, when bar 414 passes to the dotted line position of Fig. 21, the extension 245 of the corresponding key stem is in the coordinated slot 411.

Only after the operation in the sixth multiplier position has progressed to such an extent that the depressed key stem can ascend, does the corresponding extension 245 release the stop bar which then, through the traction of spring 409, moves to the dotted position of Fig. 21 and checks any further depressions of the keys in the coordinated key row. The keys of the key row "1"–"5," on the other hand, can be depressed even after the check bar 405 is in the operative locking position.

Lock for preventing accidental pressure on multiplier keys

After a key has been depressed in the seventh position of the revolutions counter, in order to prevent calculating errors by a further unintentional pressure on the multiplier keys, inasmuch as the carriage cannot be shifted any more, use is made of the arrangement shown in Fig. 22. This arrangement consists substantially of a check or stop bar 440 which corresponds to the bar 405. The bar 440 is coordinated with the multiplier key row "1"–"5" and is provided with slots 441 for the extensions 245 on the key stems. Provided at the left end of the bar 440 as shown in Fig. 22 is an oblong or elongated eyelet 442 which serves for the reception of a special pin 443 attached to the check bar 405. Attached to the bar 440 is a pin 444 with which one end of a traction spring 445 engages while the other end is attached at 446 to the frame plate 243. At the other end of the bar 440 a pawl lever 448 is pivoted by means of the pivot pin 447 and the lever 448 has a projecting shoulder 449 which extends over the front edge of the plate 241. A torsion spring 450 engaging with the lever 448 tends to hold the pawl lever 448 in the extended position shown in full lines in Fig. 22. The front end 451 of the lever 448 cooperates with a cam member 452 affixed on the main calculating shaft 37.

Operation of locks

The operation of the arrangement is as follows: If the check bar 405 is in its initial position, according to Fig. 21 or Fig. 22, the bar 440 is held in the position according to Fig. 22 against the traction of the spring 445.

If, after the carriage has assumed its right end position, the check bar 405 moves to the stop position, the pin 443 releases the bar 440, which is then held for the time in the released position by the pawl lever 448. If, at such time the machine is set in operation by depressing one of the multiplier keys 238, at the first rotation of the main shaft 37 the cam 452 strikes against the end 451 of the pawl lever 448 and raises it into the released position (see dotted line intermediate position in Fig. 22). The pawl shoulder 449 is thereby released and the stop bar 440 moves to the dotted line stop position of Fig. 22 and the multiplier key row "1"–"5" is also checked, so that unintentional further depression of keys is then precluded. Thus, failures which could result through carelessness are avoided by means of the stop bar 440.

Modified construction of Figs. 23 to 29

The arrangement according to the invention presumes that the entire totaliser mechanism is within the range of the tens carrying-over mechanism of the machine, as is the case with the construction described above, or that the totaliser itself has a ten carrying-over mechanism passing entirely therethrough. In order to be able to use the arrangement of the invention also with machines in which the carriage projects at one side beyond the calculating machine and the calculating mechanism itself has no tens carrying-over mechanism passing entirely therethrough, it is advisable to use an arrangement such as that shown in Figs. 23 to 29.

As shown in Fig. 23 the carriage 2 extends at its left end beyond the calculating machine frame proper, so that the four decimal positions of the totalizer at the extreme left have no tens carrying-over mechanism. Notwithstanding this lack, in order to avoid calculating errors, the left end 42' of the bar 42 engages with a correspondingly shaped recess 71' in a slide 71. The recess 71', for reasons given hereinafter, is somewhat longer than the width of the bar 42. Plate 71 is pro-

vided with a slot opening **72** through which two attaching screws **73** pass so that the plate **71** can be swung from the position shown in Fig. 24 into that in Fig. 26. Spring rings are disposed under the heads of the screws to act as frictional resistances.

Affixed to the slide **71** by means of the screws **74** is a plate **75** which is provided with an upwardly extending shoulder **75'**, which latter acts as an abutment for the end **76'** of a lever **76** oscillatably journalled at **77**. The lever **76** is subject to the action of a spring **78** which is attached at **78'** to the slide **71**.

An abutment **79'**, which is provided on the lever **79** rotatably journalled at **80**, cooperates with the lever **76**. The arm **82** of a right angular member **82**, **83** is affixed to the lever **79** by the rivets **81**. The free end of the arm **83** extends into the plane of the check disc which is farthest left with respect to Fig. 1, in such manner so that when it rotates for a subdivision the arm **83** is raised into the dotted position shown in Fig. 29 against the action of a spring yoke **84**. The result of this is that the abutment **79'** provided on the lever **79** is raised out of the range of the lever end **76'** and the lever **76** can swing under the action of spring **78**.

In this connection it is to be noted that the plate **34** (Figs. 2 and 9) is swung back at the end of each main shaft revolution by the roller **36** snapping into the recess **38'** and the shaft **33** returns each time to the initial position shown in Fig. 2. After the return of the plate **34** and the levers **32** and **138** connected therewith, in order that the shafts **40** and **131** will also be carried into the initial position, there are coordinated with the left ends of each of the bars **42** and **130** a pair of levers **67** (Fig. 24).

Fig. 24 shows the pair of levers only as connected with the bar **42** although it is understood a similar pair cooperate with the bar **130**. A strong traction spring **69**, applies the levers **67** against the stop pins **70**. The levers **67** are journalled at **68** on the lateral walls of the machine. The bar **42** extends between the upper ends of the levers **67**. Bar **42** can thus, by overcoming the traction of the spring **69**, be carried from the central position toward the right or the left (Figs. 24 and 26). On the other hand, however, the bar **42**, as soon as the plate **39** is released, is also carried into the neutral central position as shown in Figs. 2 or 24.

Operation of modified construction

The operation of the arrangement according to Figs. 23–29 is explained by using as an example, the preceding calculation 45×703. Insofar as this calculation relates to the two lower decimal places of the multiplier the arrangement shown on Figs. 23–29 is not involved. The arrangement is important in the calculation of the higher multiplier decimal place, that is the "7".

If, after depressing the multiplier key "7", the machine has completed its third main shaft revolution, the following value will appear in the totaliser as a result of the lacking, tens carrying-over mechanism extending therethrough.

0 000 999 999 986 635

(see dotted line position of Fig. 23). In the setting up of the "9" of the above value lying at the extreme left (thus the fifth dial from the left with respect to Fig. 23) the corresponding shaft **50a** has had to describe a tenth rotation through the corresponding shift tooth **56**, and the arm **83**, whose outer end lies in one of the recesses **5**[illegible] the check disc **51**, is raised by the passing [illegible] into the dotted line position in Fig. 29.

At the same time, however, the lever **7**[illegible] rocked upwardly by the arm **83**, so that the ab[illegible]ment **79'** releases the end **76'** and the leve[illegible] can swing under the traction of the spring into the position shown in Fig. 28, in which upwardly extending projection **76''** on the l[illegible] **76** moves within range of the beveled gears **6**[illegible]

As stated, the recess **71'** in the slide **7**[illegible] somewhat larger than the width of the ba[illegible] and the result is, that when the slide **71** has b[illegible]moved in the preceding movement of the ba[illegible] from the position of Fig. 24 into that of Fig[illegible] it will remain in this position after the bar **42** [illegible] again been returned to the neutral central p[illegible]tion shown in Figs. 2 or 25. The lever **76** [illegible] therefore remain in the position of Fig. 28.

In the following shift of the carriage to [illegible] right with the positioning of the fourth deci[illegible] position of the totaliser above the extreme r[illegible] bank of the keyboard, the extension **76''**, in [illegible] position shown in Fig. 28, will engage with [illegible] bevel gear **61** of the dial of the totaliser wh[illegible] on the shifting of the carriage, aligns with [illegible] shaft **50a**, which is the outermost left hand s[illegible] **50** as shown in Fig. 23. According to the [illegible]struction shown on the drawing this would [illegible] the dial coordinated with the fourth sight o[illegible]ing **62** from the left, in which opening t[illegible] would appear a "9" after the carriage come[illegible] a stop. The value appearing in the total[illegible] would then be

0 009 999 999 936 635

wherein the "86" would be above the two r[illegible] banks of the keyboard.

In the following plus or positive rotation, [illegible]ing which the multiplicand is carried into [illegible] ten thousandths and thousandths decimal p[illegible]tions of the totaliser, the "9" at the extreme r[illegible] of the above value is carried to "0". This [illegible]ward rotation of the corresponding dial is [illegible]tinued by the tens carrying-over mechanism [illegible]vided to all the dials toward the left, insofa[illegible] these are in the range of the calculating m[illegible]anism proper. By means of the shaft **50a**, [illegible] corresponding dial is again rotated forward [illegible] one position which was rotated backward for [illegible] position in the previous movement of the [illegible]riage. At the end of the calculation, after [illegible] machine is brought to a stop the following ac[illegible] value appears in the totaliser.

0 000 000 000 031 635

Thus, only zeros stand in front of the re[illegible] proper in the totaliser and although there i[illegible] tens carrying over mechanism extending enti[illegible] through the totaliser, no incorrect "1" app[illegible] in the dials of the totaliser.

It is also to be noted that when the moven[illegible] of the bar **42** is to the left from the posi[illegible] shown in Fig. 24, which occurs when, in [illegible] swinging of the plate **34**, the shoulder **32** [illegible] positioned in front of the pin **39'** as show[illegible] Fig. 2, the slide **71** also returns to its in[illegible] position as shown in Fig. 24. The abutment [illegible] on the slide has also swung the lever **76** b[illegible] to the position of Figs. 24 and 25 which, at [illegible] same time, results in the abutment **79'** on [illegible] lever **79** again being positioned behind the p[illegible] lever **76**. The projection **76''** is therefore alw[illegible] carried out of the range of the bevel gears **6**[illegible]

a positive or plus multiplication has been made (the plus key **8** having been actuated).

If, on the other hand, there has been a negative or subtractive multiplication (the minus key **9** actuated) the projection **76''** is in the operative position shown in Fig. 28, so that on the shift of the carriage the new dial of the totaliser coming into the range of the calculating mechanism proper describes a rotation backward. It is, of course, obvious that the projection **76''** is operative as carriage shifts take place in the preceding negative or subtractive multiplication. For example, if a multiplier "1009" is involved, the single subtraction of the multiplicand (corresponding to the supplementary value of the "9") would be followed by three carriage shifts, each for a decimal position, so that three dials of the totaliser coming within the range of the calculating mechanism would be modified so that each dial would be turned back for a position, and the value "9" appear in the corresponding sight openings.

Inasmuch as each multiplication terminates in a plus movement of the bar **42**, the lever **76** is swung into the position shown in Fig. 25 and the projection **76''** is carried out of the range of the bevel gears **61**, so that on subsequent shifts of the carriage no erroneous position could be set up by the projection **76''**.

KARL BERTHOLD WILHELM KIEL.

PUBLISHED
MAY 25, 1943.
BY A. P. C.

K. B. W. KIEL
CALCULATING MACHINE
Filed March 17, 1939

Serial No.
262,552
14 Sheets-Sheet 1

Fig.1

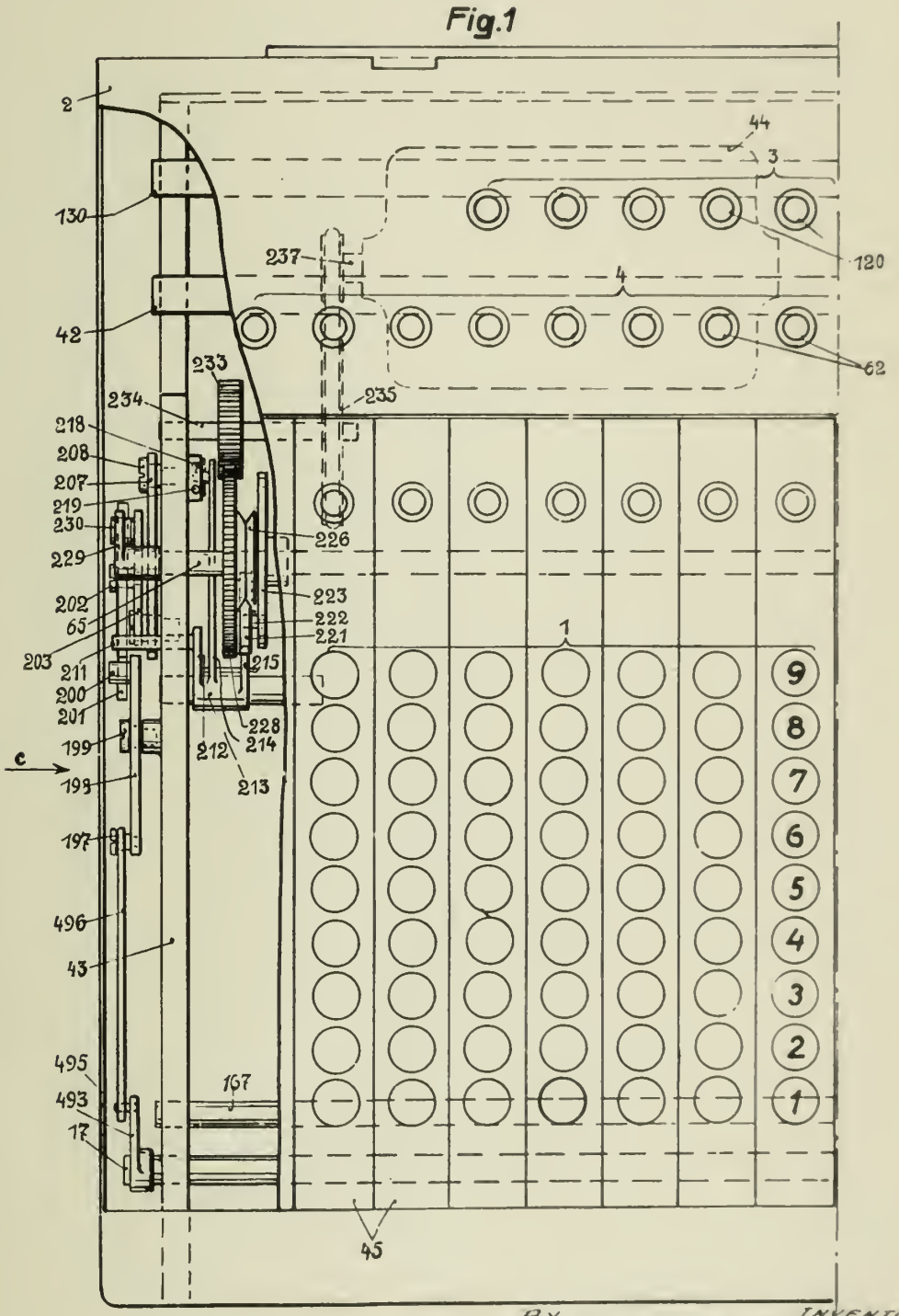

BY John Ohlund
INVENTOR K.B.W. Kiel
ATTORNEY

PUBLISHED

MAY 25, 1943.

BY A. P. C.

K. B. W. KIEL

CALCULATING MACHINE

Filed March 17, 1939

Serial No.

262,552

14 Sheets-Sheet 2

Fig. 1A

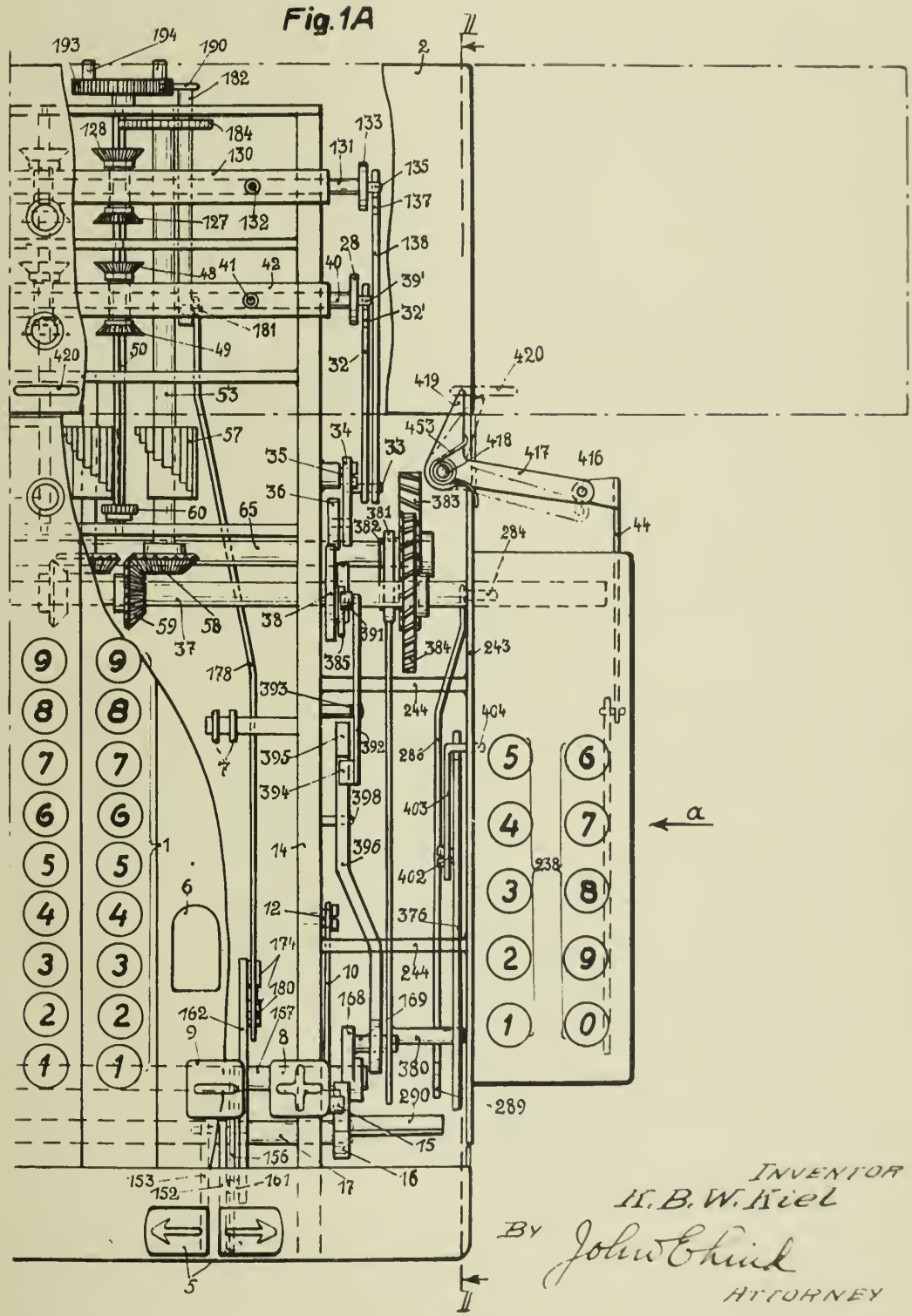

PUBLISHED
MAY 25, 1943.
BY A. P. C.

K. B. W. KIEL
CALCULATING MACHINE
Filed March 17, 1939

Serial No.
262,552
14 Sheets-Sheet 3

Fig.5

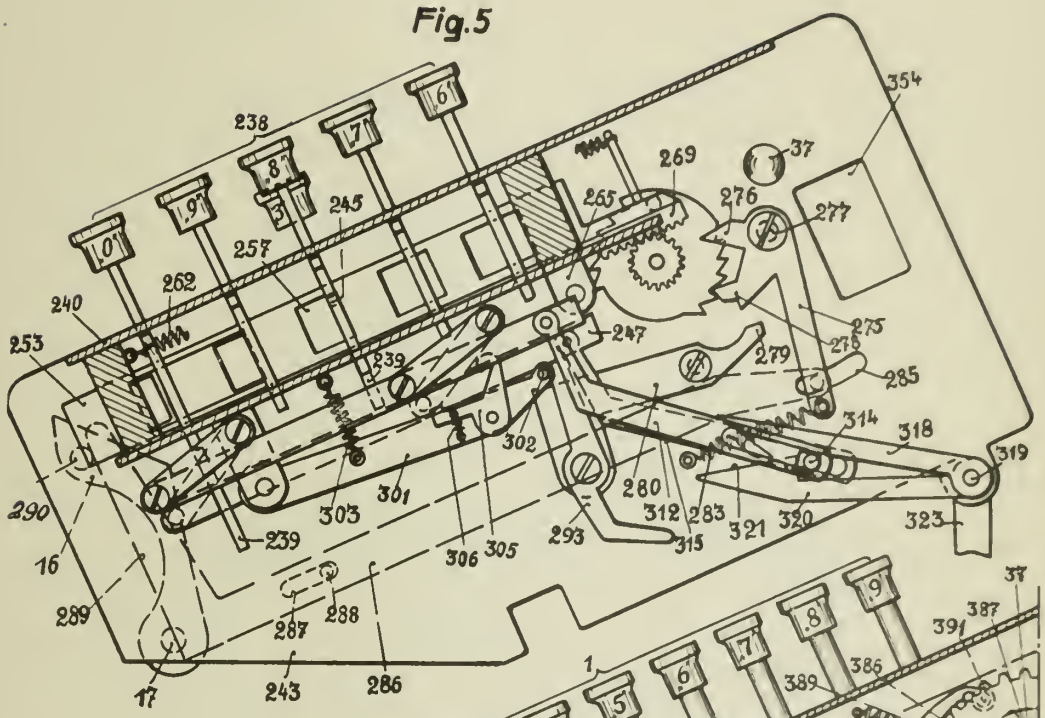

Fig.2

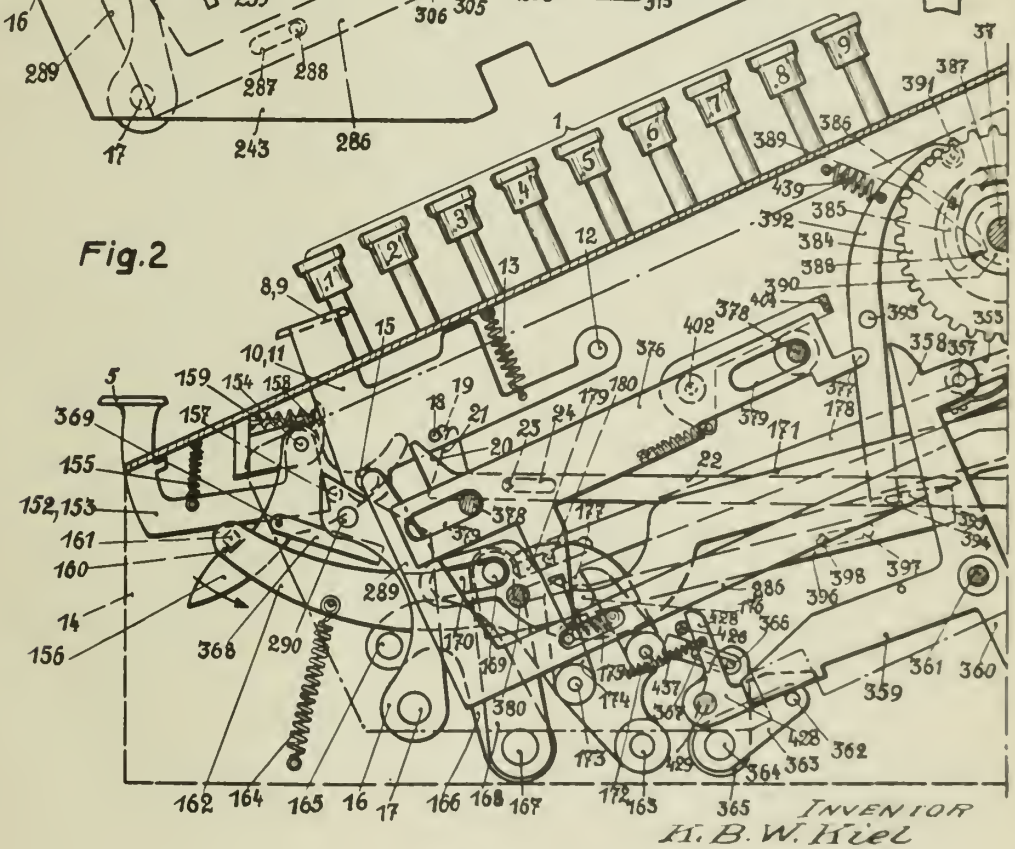

INVENTOR
K. B. W. Kiel
BY John C. Lind
ATTORNEY

PUBLISHED
MAY 25, 1943.
BY A. P. C.

K. B. W. KIEL
CALCULATING MACHINE
Filed March 17, 1939

Serial No.
262,552
14 Sheets-Sheet 4

Fig.18

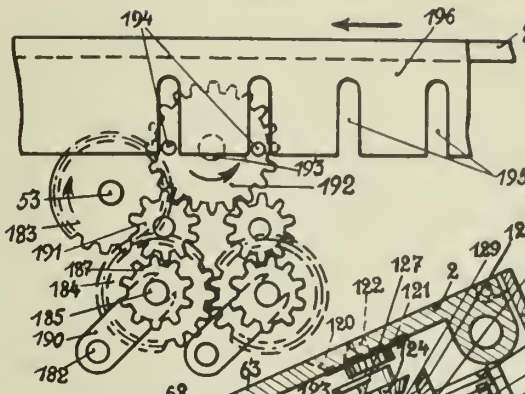

Fig.2A

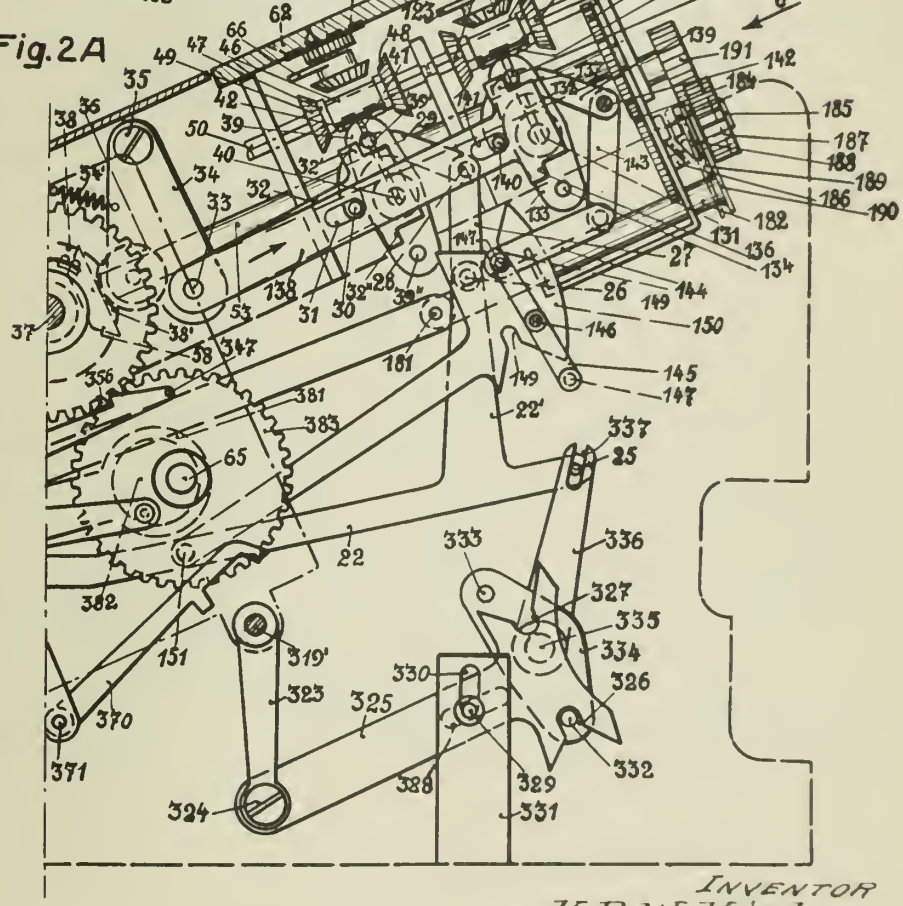

INVENTOR
K. B. W. Kiel
By John W. Ehrlich
ATTORNEY

PUBLISHED
MAY 25, 1943.
BY A. P. C.

K. B. W. KIEL
CALCULATING MACHINE
Filed March 17, 1939

Serial No.
262,552
14 Sheets-Sheet 5

Fig. 3

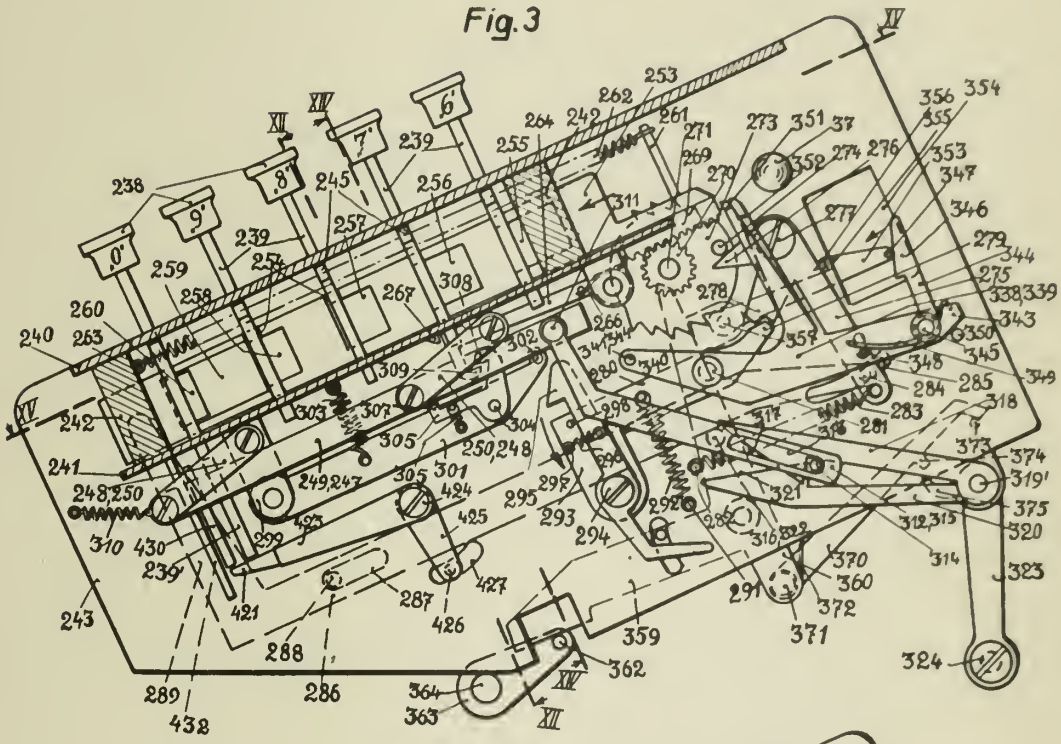

Fig. 4

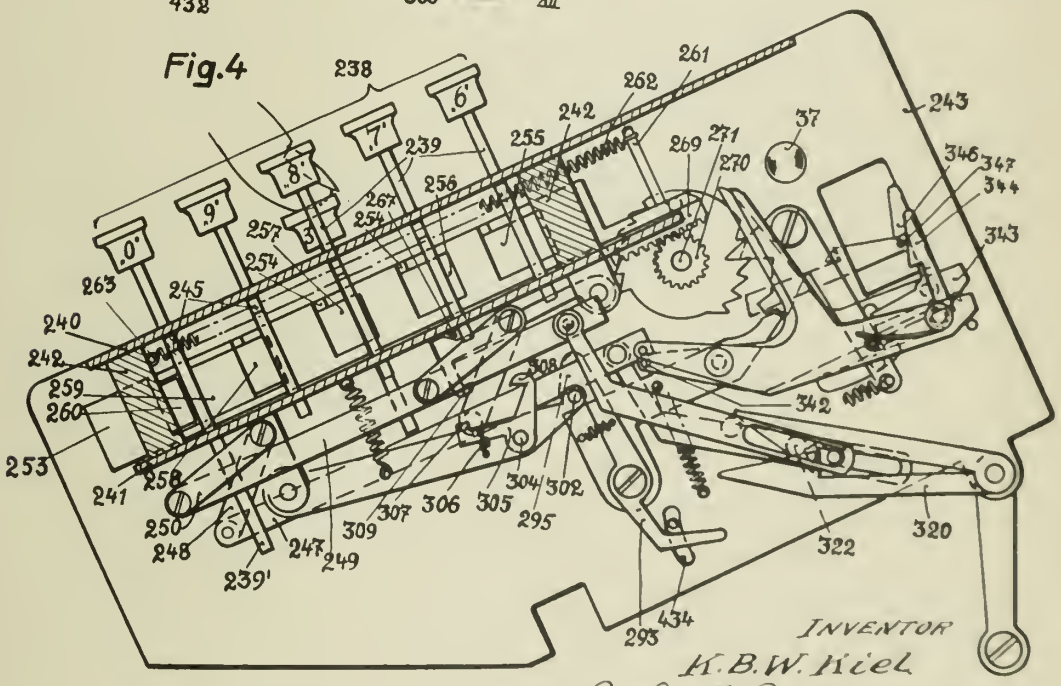

INVENTOR
K. B. W. Kiel
BY John C. Kind
ATTORNEY

PUBLISHED
MAY 25, 1943.
BY A. P. C.

K. B. W. KIEL
CALCULATING MACHINE
Filed March 17, 1939

Serial No.
262,552
14 Sheets-Sheet 6

Fig.6

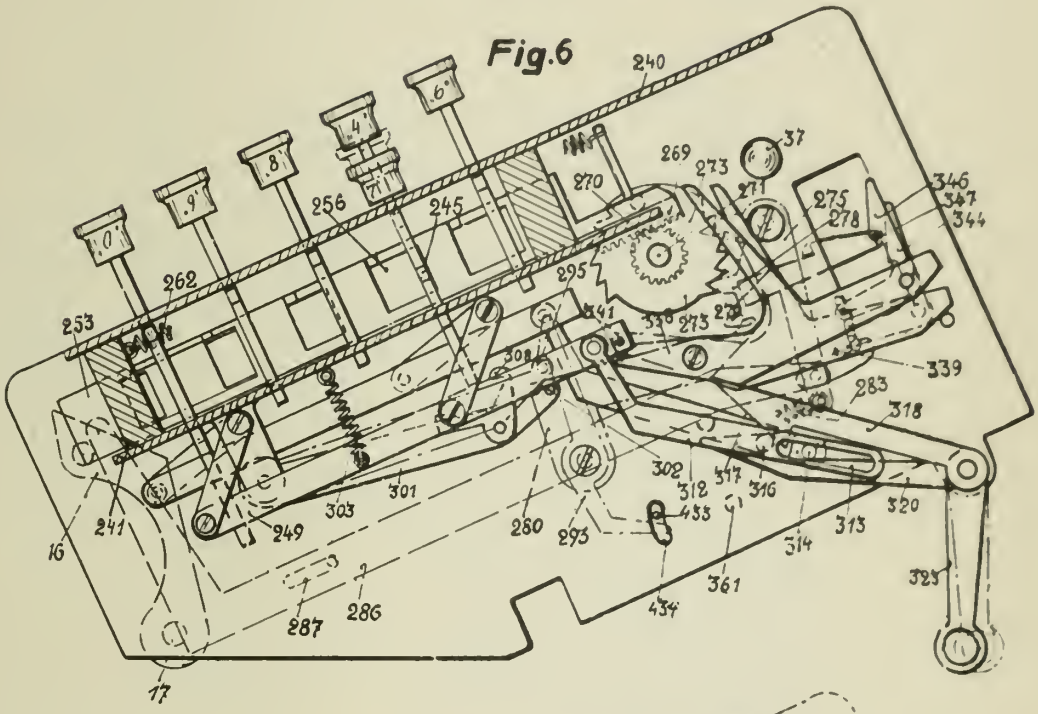

Fig.10

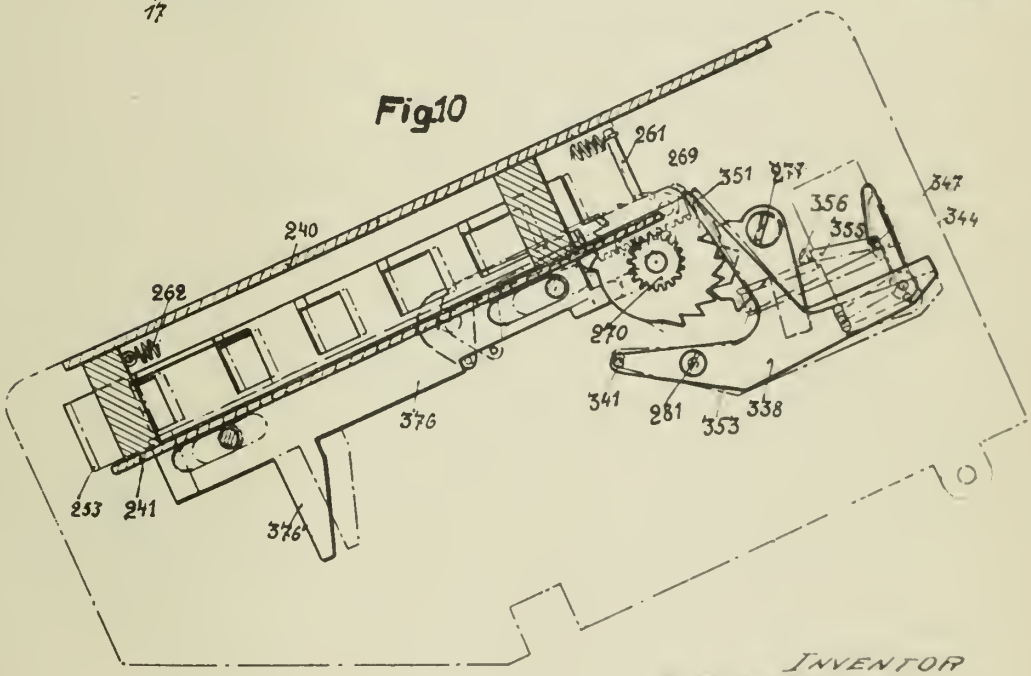

INVENTOR
K. B. W. Kiel
BY John C. Kind
ATTORNEY

PUBLISHED
MAY 25, 1943.
BY A. P. C.

K. B. W. KIEL
CALCULATING MACHINE
Filed March 17, 1939

Serial No.
262,552
14 Sheets-Sheet 7

Fig. 12

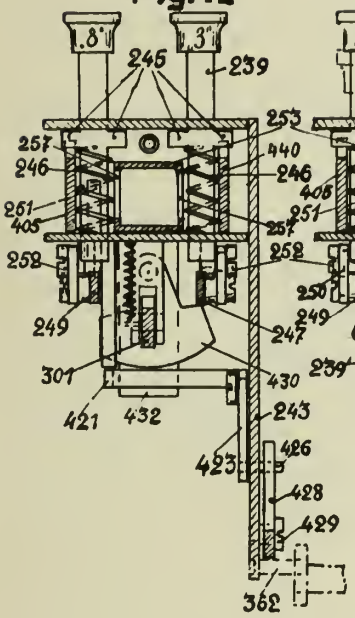

Fig. 13

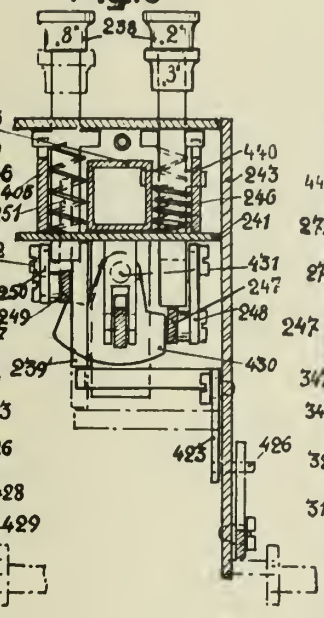

Fig. 14

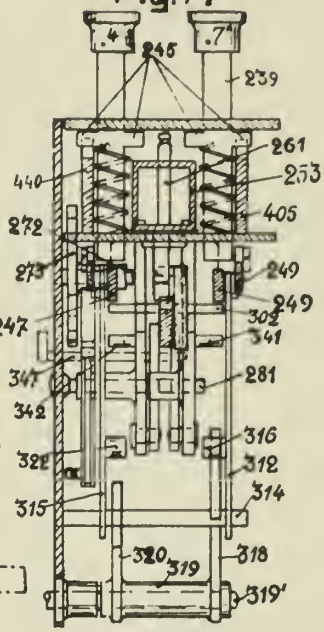

Fig. 7

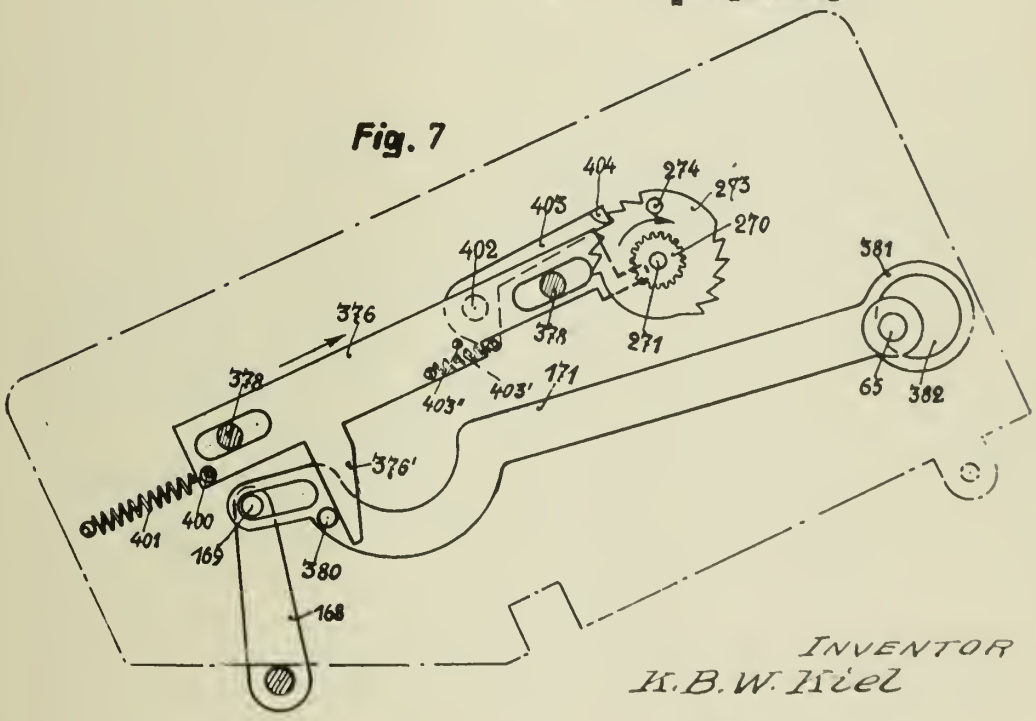

INVENTOR
K. B. W. Kiel
BY John Oliver
ATTORNEY

PUBLISHED
MAY 25, 1943.
BY A. P. C.

K. B. W. KIEL
CALCULATING MACHINE
Filed March 17, 1939

Serial No.
262,552
14 Sheets-Sheet 8

Fig. 8

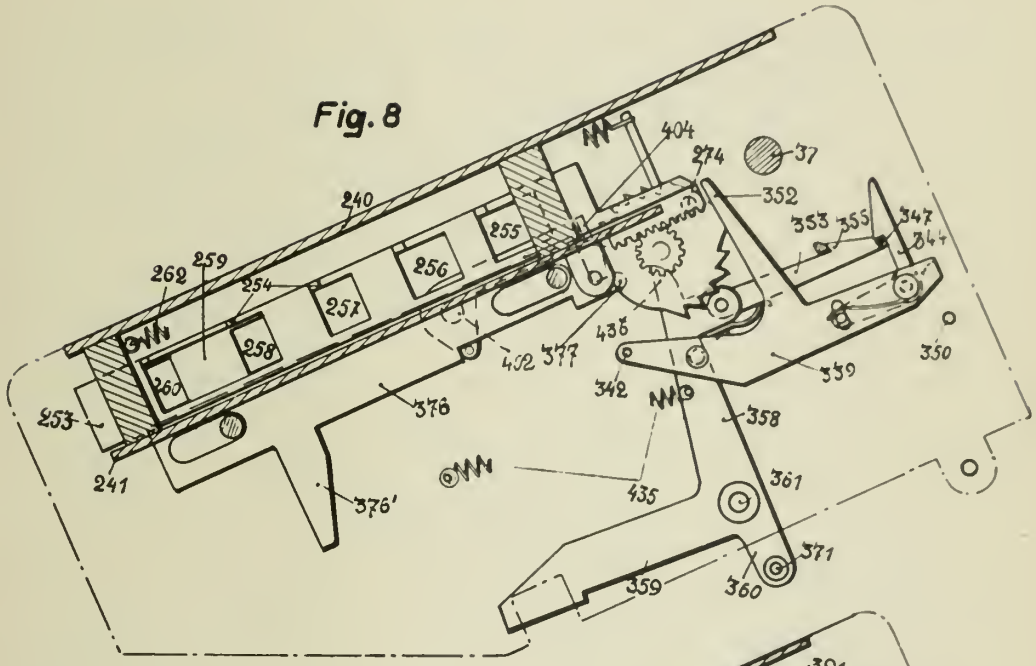

Fig. 9

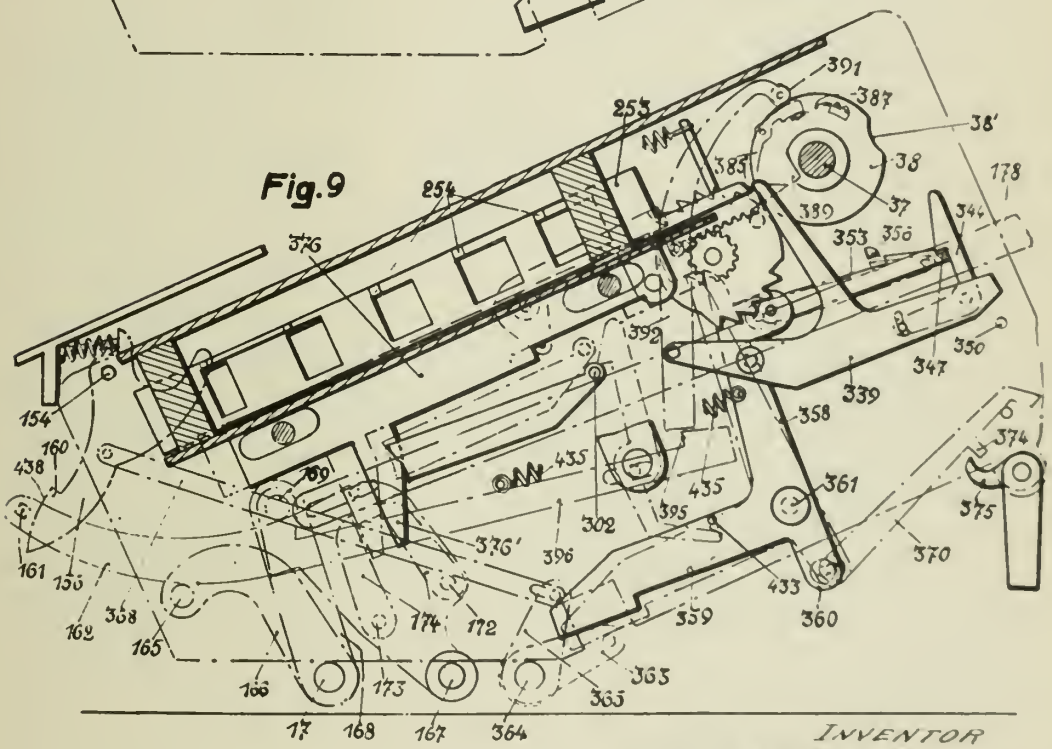

INVENTOR
K. B. W. Kiel
BY John C. Lind
ATTORNEY

PUBLISHED
MAY 25, 1943.
BY A. P. C.

K. B. W. KIEL
CALCULATING MACHINE
Filed March 17, 1939

Serial No.
262,552
14 Sheets-Sheet 9

Fig. 22

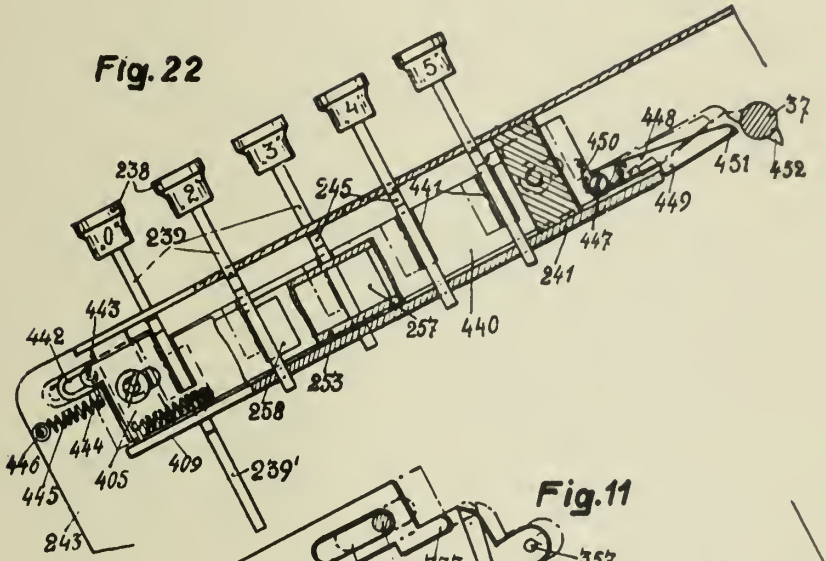

Fig. 11

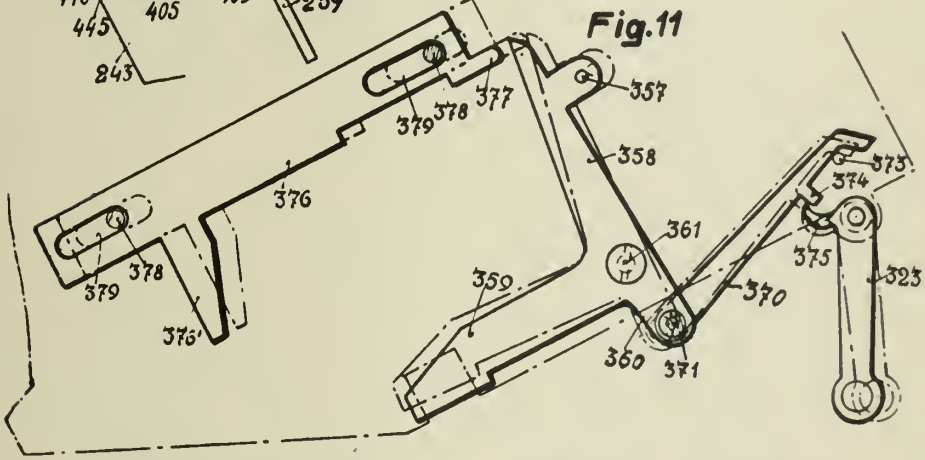

Fig. 15

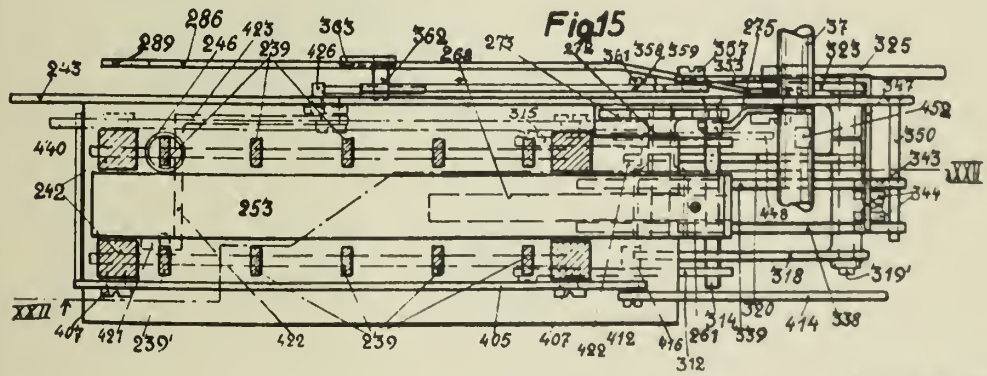

INVENTOR
H. B. W. Kiel
BY John Oland
ATTORNEY

PUBLISHED
MAY 25, 1943.
BY A. P. C.

K. B. W. KIEL
CALCULATING MACHINE
Filed March 17, 1939

Serial No.
262,552
14 Sheets-Sheet 10

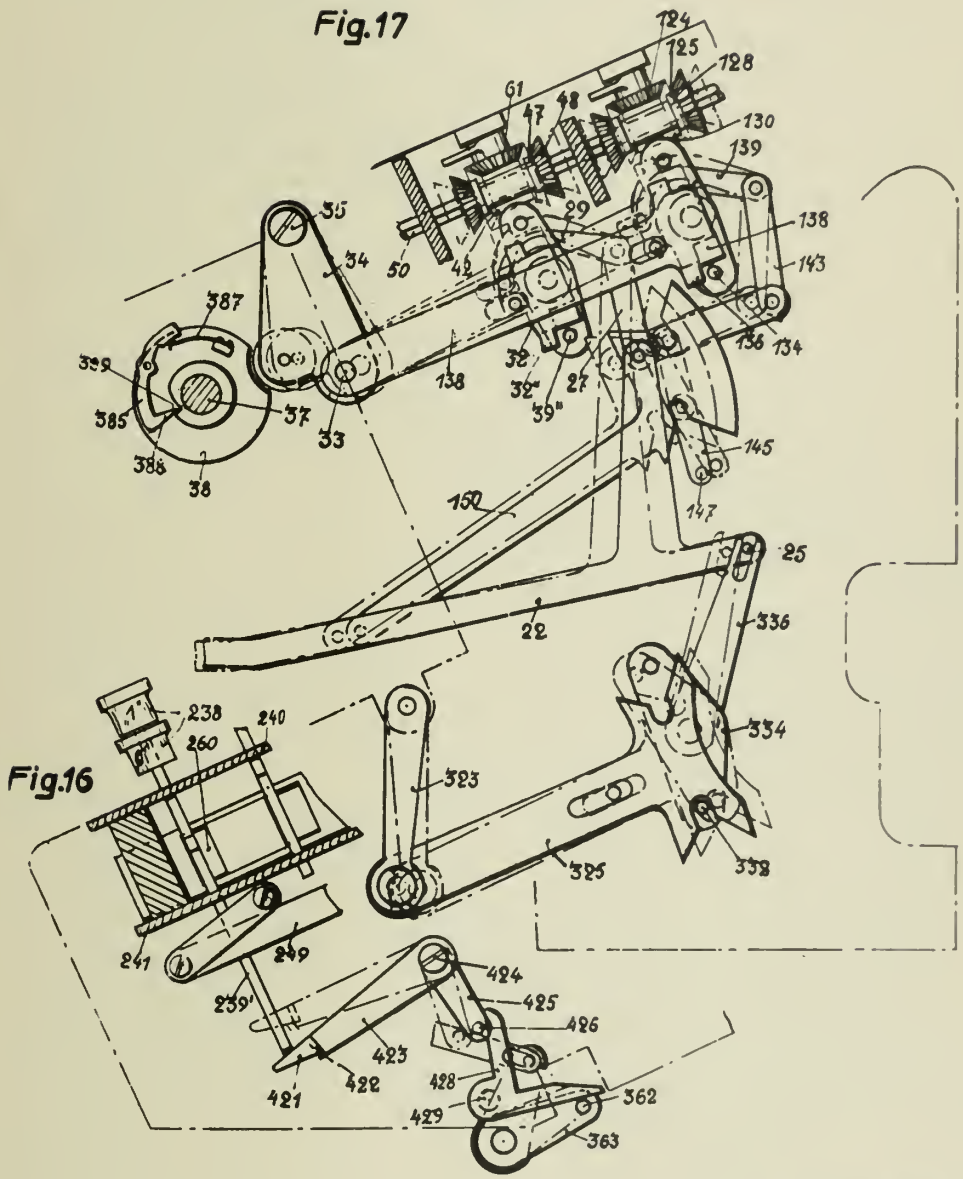

INVENTOR
K. B. W. Kiel
BY John C. Kind
ATTORNEY

PUBLISHED
MAY 25, 1943.
BY A. P. C.

K. B. W. KIEL
CALCULATING MACHINE
Filed March 17, 1939

Serial No.
262,552
14 Sheets-Sheet 11

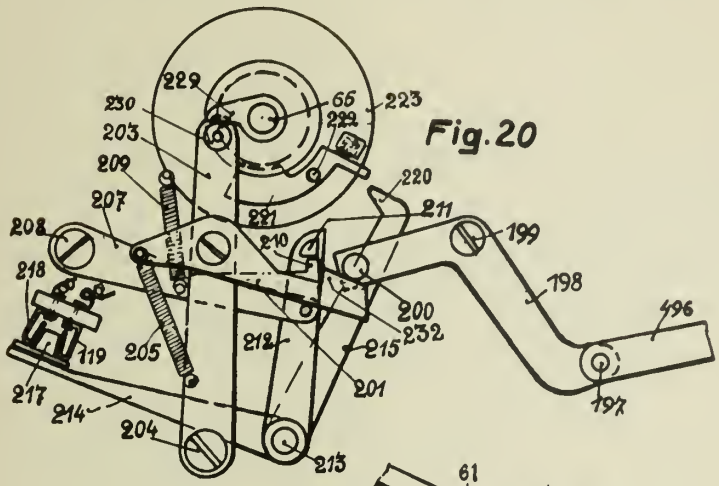

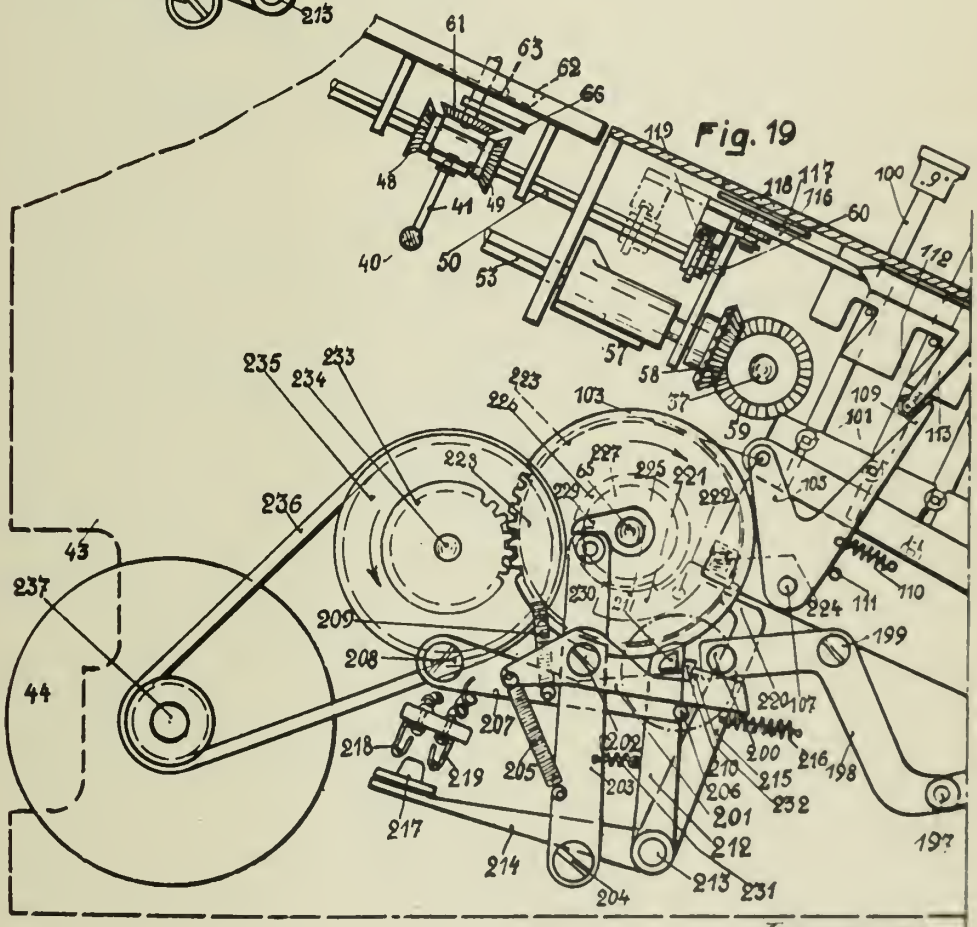

INVENTOR
K. B. W. Kiel
BY John B. Kind
ATTORNEY

PUBLISHED
MAY 25, 1943.
BY A. P. C.

K. B. W. KIEL
CALCULATING MACHINE
Filed March 17, 1939

Serial No.
262,552
14 Sheets-Sheet 12

Fig. 21

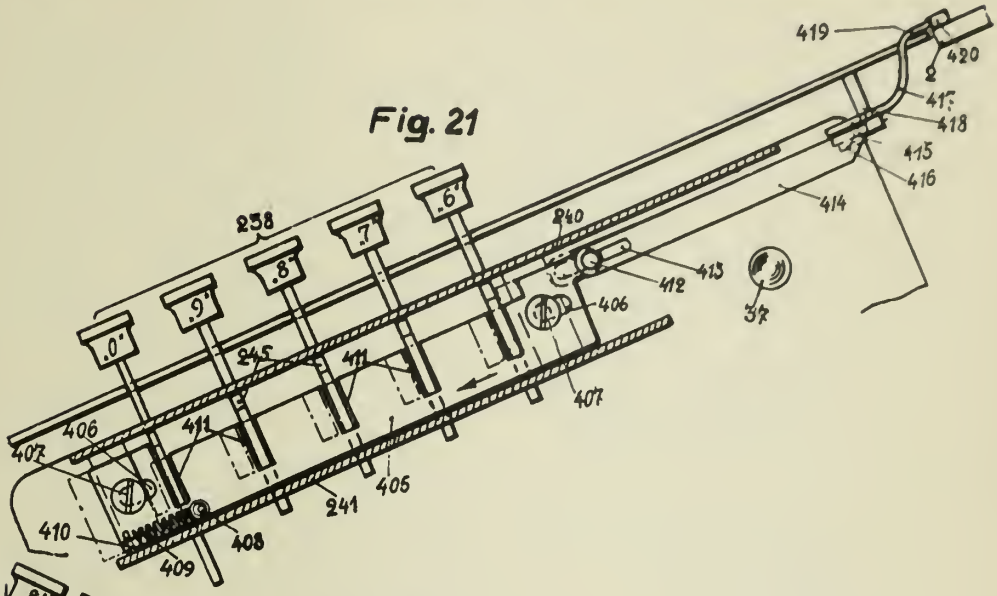

Fig.19A

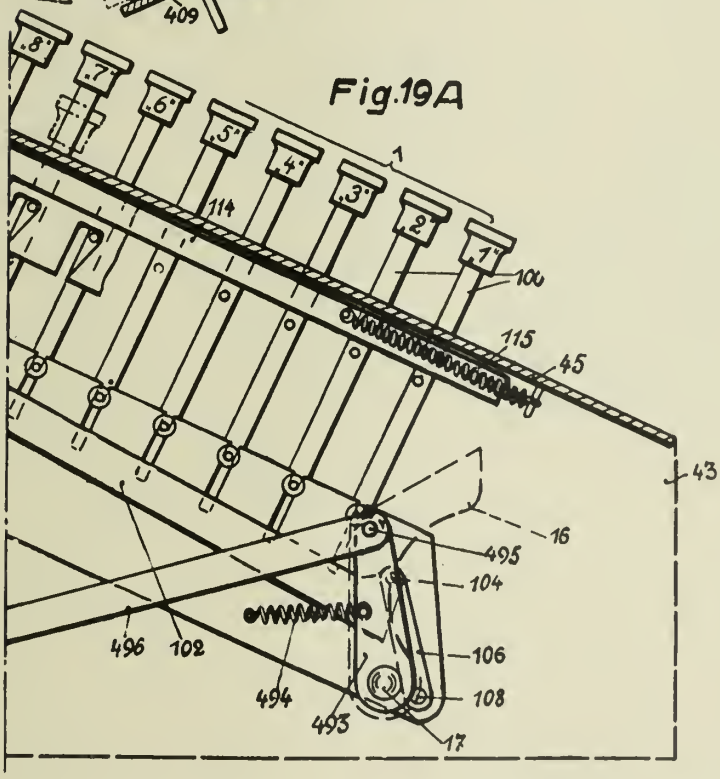

INVENTOR
K.B.W. Kiel
BY John C. Lind
ATTORNEY

PUBLISHED

MAY 25, 1943.

BY A. P. C.

K. B. W. KIEL

CALCULATING MACHINE

Filed March 17, 1939

Serial No.

262,552

14 Sheets-Sheet 13

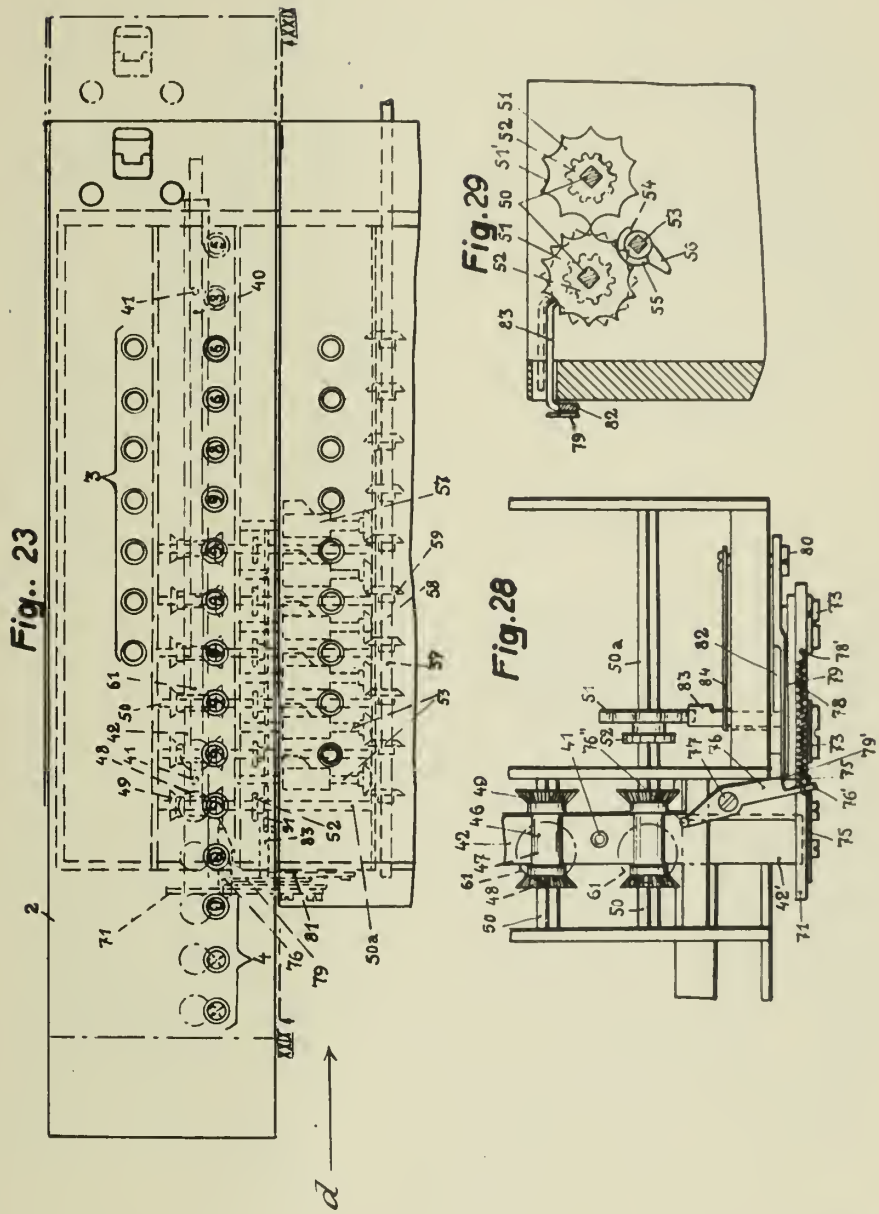

INVENTOR

K. B. W. Kiel

BY John C. Kind

ATTORNEY

PUBLISHED

MAY 25, 1943.

BY A. P. C.

K. B. W. KIEL

CALCULATING MACHINE

Filed March 17, 1939

Serial No.

262,552

14 Sheets-Sheet 14

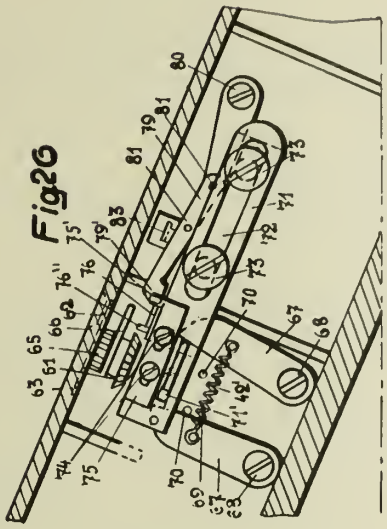

Fig. 26

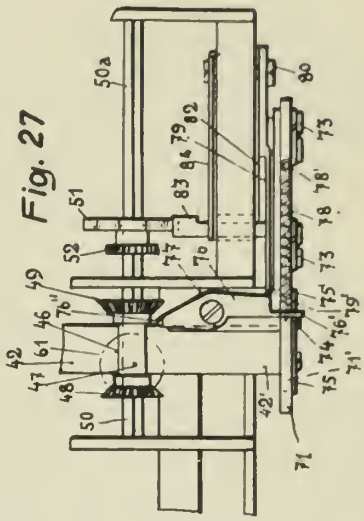

Fig. 27

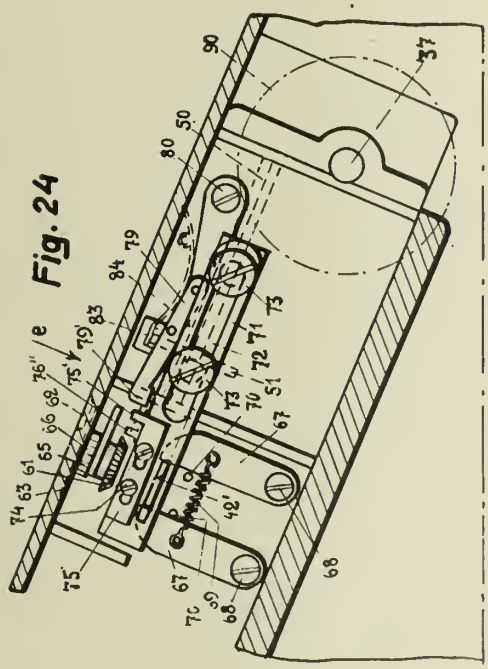

Fig. 24

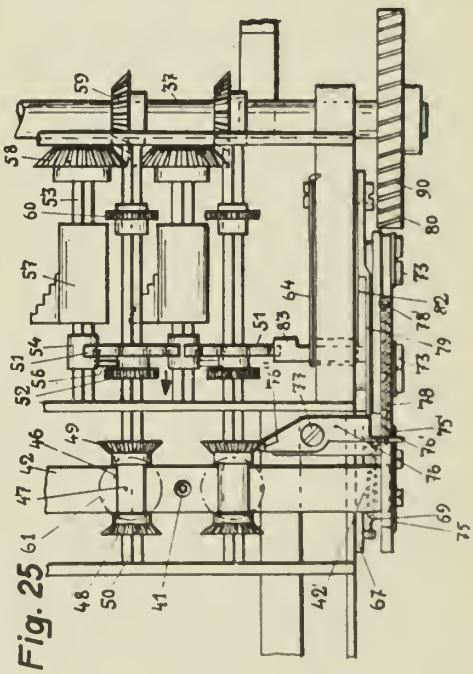

Fig. 25

INVENTOR

K. B. W. Kiel

By John C. Lund

ATTORNEY

Published May 25, 1943

Serial No. 263,139

ALIEN PROPERTY CUSTODIAN

POWDER BOX HAVING A HERMETIC AND INVIOLABLE CLOSURE

André Albert Samuel, Paris, France; vested in the Alien Property Custodian

Application filed March 21, 1939

The invention relates to a powder box having a hermetic and inviolable closure, which is simple and economical to manufacture.

It is known that, for the sale of certain powders in boxes, for example of rice powders or of face paints, it is advantageous for the box to be inviolable after filling so as to provide the client with a guarantee of the origin of the product contained therein.

Furthermore, in order to enable the client to choose the powder, for example of the shade of the paint, said boxes are generally closed at their upper part by means of a disc or an end of transparent material, such as Cellophane.

At the present time, this manufacture is generally effected by starting from a box having a perforated lower end provided with a fairly large diameter opening through which filling is effected and which is then closed by means of a cardboard disc on which is cemented a paper disc in order to ensure hermeticity. This method is expensive, since it necessitates a considerable amount of labour, both for the various sucessive operations and for the finishing manipulations. Furthermore, the box thus obtained is costly to manufacture in order to give it a very finished appearance.

This invention has for its object a cylindrical box device, made for example of cardboard, in which filling is effected through the upper part and the closure of which is obtained quickly and with little labour, while being perfectly hermetic and inviolable.

Said box essentially comprises a cylindrical body which is provided with a non-perforated end and inside which is arranged a tubular part smaller height than said body, on which part then crimped, after filling (either directly or th the interposition of rings, a cup or disc made transparent or other material, thereby giving box thus constituted and closed, both a handome appearance and a hermetic closure.

The accompanying drawings show, by way of examples, two embodiments of the box according to the invention.

Fig. 1 of said drawings is a vertical axial section of a box, showing the first embodiment; Fig. 2 is a general view of a second embodiment.

As can be seen in Fig. 1, the box comprises an outer cylindrical body 10, made of cardboard for example, provided with a non-perforated end 11 which may be made by machine with said body.

In to the cylindrical body 10 is introduced a tubular cardboard part 12, which is adapted to bear against the wall of the cylinder 10 and is of slightly smaller height than the body 10, for example a few millimetres less than the latter.

For the closure, a small stamped cup 13 is used, made for example of Cellophane, thin metal, plastic material or other appropriate material, having a diameter equal to the inner diameter of the outer cylinder 10 and a height equal to the difference of height between the cylindrical body 10 and the inner tubular part 12. Said cup 13, which slides with running friction into the box, is adapted to rest on the shoulder formed by the upper edge of the inner tubular part 12. A roller inner beading 14, obtained by rolling and crimping the upper edges of the outer cylindrical body 10 and the cup 13, ensure an inviolable and hermetic closure of the box by firmly pressing the body 10 and the cup against each other.

In the embodiment of Fig. 2, the outer cylindrical body 10, provided with an end 11, is lined in the same manner as the inner tubular part 12 to a height slightly less than the body 10. A circular ring 15, made of slightly resilient material, for example cardboard, and of a equal diameter to the inner diameter of the cylindrical body 10, rests on the upper edge of the inner tubular part 12.

A closure disc 16, made of Cellophane or other transparent material, of the same diameter as the ring 15, is then placed on said ring. A second ring 17, identical with the previous one is then placed on the disc 16 to increase the hermeticity of the box. Finally, a beading 14', obtained by rolling and crimping the upper edge of the outer cylindrical body 10 and pressing on the arrangement formed by the disc and the rings, ensures the inviolable and hermetic closure of the box.

This second embodiment offers the advantage of permitting, by an appropriate colouring of the rings and if necessary by an original cutting out of the inner circle of said rings, an artistic appearance to be given the box.

Furthermore, the rings prevent the powder from blowing out of the box when same is opened, by suction between the cover and the box proper.

The filling of the boxes which are the object of the invention, is effected before the cup 13 (Fig. 1) or the disc 16 (Fig. 2) is placed in position, the box being filled with powder up to the level of the upper edge of the inner tubular part 12.

When the cup 13 or the disc 16 has been placed in position, the crimping of the upper edge of the cylindrical body 10 ensures, by pressure, a perfect hermeticity of the closure, at the same time as the inviolability of the box.

Instead of two rings, an inner one **15** and an outer one **17**, such as those shown in Fig. 2, a single inner ring **15** may be employed, the closure beading obtained by crimping the upper edge of the body **10** being adapted to press directly on the closure disc **16**.

It is obvious that the embodiments which have been described and illustrated have only been given by way of practical examples of the invention and that said invention is capable of being subjected to any modifications.

In particular, the shapes, materials and dimensions of the component parts, viz. body, inner tubular part, closure disc or cup, may be mo fied without in any way changing the inventi Thus, instead of being made of cardboard, box would be made of any material capable being rolled and crimped. Similarly, the cup, rings and the closure disc may be made of plas material, thin metal or of any sufficiently mal able substance. Likewise, if the thickness of inner tubular part is sufficient to form an effici seating, the use of the lower ring **15** may be d pensed with.

ANDRÉ ALBERT SAMUEL

PUBLISHED

MAY 25, 1943.

BY A. P. C.

A. A. SAMUEL
POWDER BOX HAVING A HERMETIC AND INVIOLABLE CLOSURE
Filed March 21, 1939

Serial No.
263,139

Fig.1

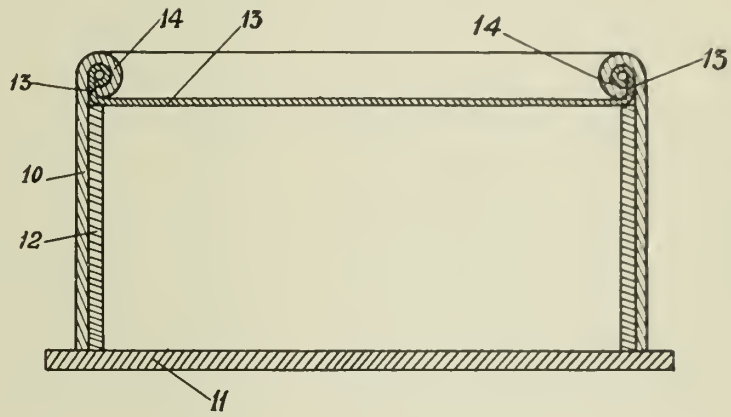

Fig.2

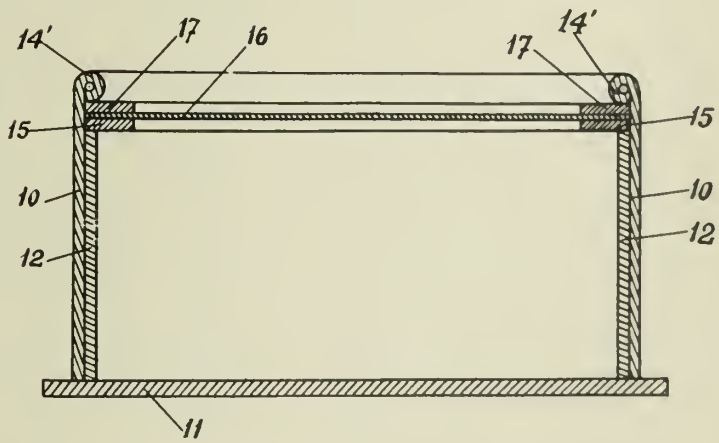

INVENTOR
ANDRÉ ALBERT SAMUEL
BY Richards & Geier
ATTORNEYS

Published May 25, 1943

Serial No. 263,333

ALIEN PROPERTY CUSTODIAN

CHASSIS ESPECIALLY FOR MOTOR VEHICLES

Max Wagner, Stuttgart, Germany; vested in the Alien Property Custodian

Application filed March 22, 1939

This invention relates to improvements in the construction of chassis for vehicles, especially for motor vehicles. It consists essentially in that the longitudinal members of the chassis comprise on the one hand a practically straight (straight or only slightly outwardly bent) section of one-piece tubular cross-section and on the other hand of a cranked section (especially in the region of the rear axle) the cranked section being formed by at least two pressings which are welded together by longitudinal seams to form a closed cross-section.

Experience has shown, that such chassis built-up of several sections, contrary to first expectations, are in no way weakened by the subdivision, but, on the contrary, possess considerable advantages not only as regards the process of production but also as regards strength.

Owing to the fact, that the straight or substantially straight portion of the frame is formed of a tube of one-piece cross-section, a considerable simplification and cheapening of the chassis is attained. On the other hand, as the rear cranked part is not made also of such one-piece tubes, the objection is obviated that a complicated shaping of the tube is necessary which would also be detrimental for the strength of the chassis.

Moreover owing to the fact that merely that part of the frame which is sharply bent or has a changing cross-section, is composed of several sheet metal pressings, the objection is avoided that the sheet-metal pressings are of very large dimensions, which would require exceptionally large shaping forces and very large machines and pressing dies. With the relatively small dimensions used according to the invention the pressings can be produced without difficulty and advantageously. By suitably welding the pressings and suitably connecting the different sections of the longitudinal chassis members very high strength properties are obtained.

The invention combines the advantage of easy production with the advantage of great strength of the chassis, without the disadvantages of complicated and expensive shaping of tubes and the disadvantages of large pressings.

The invention also relates to a particularly advantageous connection of the two longitudinal member sections resisting bending and torsional stresses.

The invention furthermore relates to a joint between longitudinal and cross chassis members of closed, for example, box-shaped or tubular cross-section, especially for motor vehicles, and insofar consists substantially in that at least one member (particularly a cross member) extends through at least one other member (particularly a lateral longitudinal member) and is reduced in cross section between the two walls of the latter in such a manner that it possesses a larger passage cross section on the side subjected to the heavier load, that is on the inner side, than on the side subjected to the lighter load, that is on the outer side. The penetrating chassis member is welded on its entire periphery to both walls of the chassis member through which it extends.

The object of the further invention is, to increase the strength and stiffness of the connection of the chassis members without the pierced chassis member being weakened by unnecessarily large holes for the passage of the other chassis member. At the same time the reduction in cross-sectional area of the penetrating chassis member represents a saving in weight and material.

The invention finally consists in the provision of tunnel-like passages in these parts of the vehicle which are in the way of the cross-members, for example the chassis members located within the range of the engine and change gears viz. the casings of the driving parts of the engine pass through these. The housing of a driving aggregate consisting of engine and change gear is preferably provided with tunnel-like passages at the joint between the engine and the change-gear flanged thereto through which passages the chassis cross members extend freely. The tunnel-like passages are preferably closed at the bottom by a supporting bridge for the gear case.

This arrangement possesses the advantage that the chassis members need not be bent in proximity to the driving aggregate so that their torsional resistance is fully preserved. This is of particularly great advantage for tubular chassis members. Furthermore, the height at which the bearings of the engine and change gear are located is in no way influenced by the girders, and moreover no vibrations are transmitted from the drive directly to the chassis tubes, and inversely the housing of the drive is protected against the torsional stresses of the chassis.

It is of course also possible to combine the shown combination of the parts of the longitudinal members with the provision of the tunnel-like passages for the cross members with the passing of at least one member, preferably a cross member, through at least one another member, preferably a lateral longitudinal member, especially as shown above for this latter feature.

Other features and advantages of the invention

are disclosed in the construction hereinafter described by way of example with reference to the accompanying drawing, in which:

Fig. 1 shows a chassis in side elevation,

Fig. 2 is a top plan view of Fig. 1,

Fig. 3 is a cross-section on line 3—3 of Fig. 2,

Fig. 4 is a cross-section on line 4—4 of Fig. 2.

The chassis consists of two longitudinal members *a* and of tubular cross members *b*. Each of the longitudinal members is built up of a front section c of oval cross-section and extending substantially straight from its front end to near the rear wheels of the vehicle and of a rear section *d* which extends over the rear wheels in a strong bend.

The cross members, as shown particularly in Figs. 3 and 4, extend through the longitudinal members and are welded thereon on both their passage cross-sections b_1 and b_2, the passage cross-section b_1 on the inner side of the longitudinal member being larger than the passage cross-section b_2 on the outer side thereof.

The front section c of the longitudinal chassis member is formed from a plate rolled into a tube of oval cross-section, the abutting edges of the rolled tube being welded together by a longitudinal seam *e* (Fig. 3).

The rear, strongly bent section *d* is formed by two U-shaped pressings d_1 and d_2 each having short flanges *f* by which they are welded together by means of a lower and upper longitudinal seam in such a manner that they form members with a closed substantially box-shaped cross-section.

The front member section c is connected to the rear member section *d* in such a manner that the tubular end c_1 of the member section *c* is introduced obliquely and laterally into the abruptly rising portion of the rear section. To enable this, the front ends of the two pressings d_1 and d_2 are bent apart so that they grip the ring-shaped end c_1 of the front section on both sides; the wedge-shaped gap thus formed between the two ends of the pressings d_1 and d_2 is covered by a filling plate d_3 which is welded both to the pressings d_1 and d_2 and to the tubular end of the member *c* to form a closed cross-section.

Moreover, the rear end of the front section c is welded at the contact edges to the pressings d_1 and d_2 of the rear section.

If desired the front tapering end c_2 of the front section of the longitudinal member may be built up from two pressings corresponding to the rear longitudinal member section, so that the one-piece longitudinal member section c is of uniform cross-section along its entire length.

Two embodiments of the further improvements are illustrated in Figs. 3 and 4.

Through the longitudinal member a tubular cross member *b* extends having on the right, inner side a^1 of the longitudinal chassis member a passage cross-section D1 and on the left, o side a^2 of the longitudinal chassis memb smaller passage cross-section with a diameter The cross member *b* tapers from the D1 to along the section *b'* between the two pas cross-sections.

In Fig. 4 the tubular cross-member *b* tape outward direction from the diameter D1 to outer smaller cross-section D2 along the in mediate section *b'*. The length L of the tap section *b'* is shorter than the distance betw the side walls d_1 and d_2 of the longitud chassis girder, so that the connection of t side walls of the longitudinal chassis mem with the cross-member takes place at the cy drical portions of the latter.

In both instances the cross-chassis memb welded to the walls of the longitudinal ch member on its entire periphery at the pas points, so that a very stiff joint is obtained.

In a corresponding manner the cross-ch member is connected with another longitud chassis member arranged symmetrically on opposite side of the longitudinal central plan the vehicle.

If, for example the cross chassis membe loaded on its middle portion (with diameter the load will be taken up chiefly by the in wall a^1 or d_1 of the longitudinal chassis mem whereas the outer wall a^2 or d_2 will be less hea loaded.

For this reason the passage cross-sectional of the outer wall a^2 or d_2 of the longitud chassis member may, as mentioned above smaller than the passage cross-sectional are the inner wall a^1 or d_1.

Near the front end of the chassis (Figs. 1 2) the driving engine **3** and the change ge are arranged, the change gear being unsuppo and flanged to the engine **3**, and the engine i is rigidly connected with the longitudinal ch members by lateral lugs **5**. According to the vention the housing of the driving aggregate has, at the point **6** between the engine and cases, a tunnel-like passage **7** (Fig. 1) thro which the chassis cross member *b'* locate this point extends freely. The tunnel-like sage **7** is closed at the bottom by a bridge **8** w supports the gear case **4** on the engine cas The bridge **8** is separately fitted and bolted between the engine and gear cases. It however, be made in one piece either with engine case or with the gear case.

The invention may be applied in such a m ner that the chassis cross-member exte through a tunnel-like passage in the engine c provided the constructional shape of the cr shaft and sump will allow.

MAX WAGNE

PUBLISHED

MAY 25, 1943.

BY A. P. C.

M. WAGNER

CHASSIS ESPECIALLY FOR MOTOR VEHICLES

Filed March 22, 1939

Serial No.

263,333

Fig. 1.

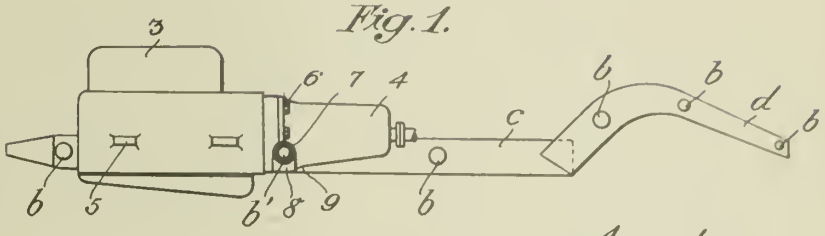

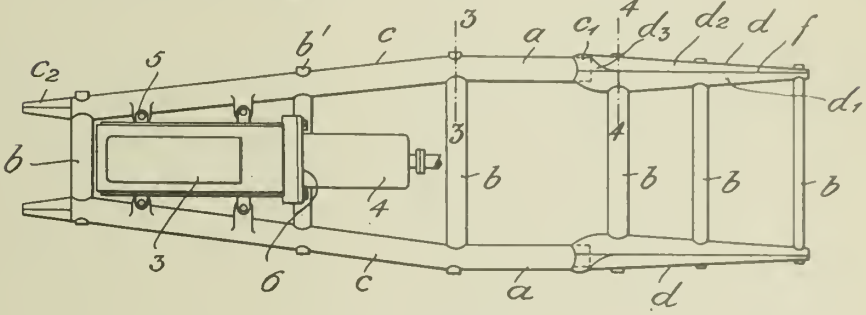

Fig. 2.

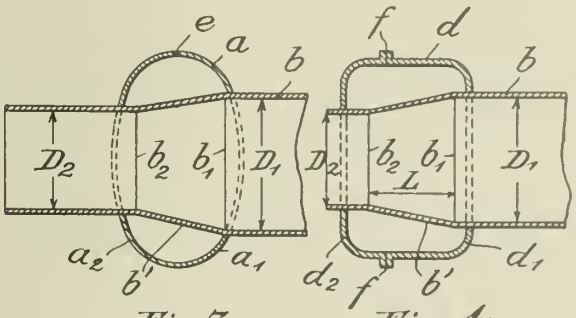

Fig. 3. Fig. 4.

INVENTOR:
MAX WAGNER
BY Haseltine, Lake & Co.
ATTORNEYS

Published May 25, 1943

Serial No. 264,004

ALIEN PROPERTY CUSTODIAN

STABILIZERS FOR AIRCRAFTS

Paul Aimé Richard, Clichy, France; vested in the Alien Property Custodian

Application filed March 24, 1939

The present invention relates to the stabilizing or balancing devices of aerial locomotion machines and it is more especially, although not exclusively, concerned, among these devices, with those carrying the control surfaces of these machines.

The chief object of the present invention is to provide devices of this kind which are better adapted to meet the requirements of practice than those made up to the present time, especially concerning their rigidity, their resistance to stresses more especially produced by the controlling surfaces and their capacity of reducing the tail vibrations which are very important with the devices of this kind as they are made at the present time.

According to an essential feature of the present invention, the stabilizers of machines of the type above mentioned are constituted by at least two streamlined planes, substantially horizontal and transversely supported by the fuselage, these horizontal planes being interconnected by at least two substantially vertical streamlined planes, respectively located in the vicinity of the free ends of said horizontal planes and forming, together with them, at least one element or section of a so-called "ladder" beam.

Other features of the present invention will result from the following detailed description of some specific embodiments thereof.

Preferred embodiments of the present invention will be hereinafter described, with reference to the accompanying drawings, given merely by way of example and in which:

Fig. 1 is a vertical sectional view, on the line 1—1 of Fig. 2, of a stabilizer made according to a first embodiment of the invention;

Fig. 2 is an elevational view corresponding to Fig. 1;

Fig. 3 is a plan view corresponding to said Fig. 1;

Fig. 4 is a diagrammatic elevational view of a modification of this first embodiment of the invention;

Fig. 5 is a diagrammatical plan view of another modification of this first embodiment of the invention;

Fig. 6 shows, in diagrammatical plan view, a stabilizer made according to a second embodiment of the invention;

Fig. 7 shows, in a similar manner, a stabilizer device made according to a modification of this second embodiment;

Fig. 8 shows, in diagrammatical elevation, a device made according to a third embodiment of the invention.

In the following description with reference to the drawings, it will be supposed, by way of example, that it is desired to provide an improved stabilizer or tail for an airplane.

In this case, on the fuselage of the airplane, for instance at the rear end thereof, I provide two streamlined planes 3 and 4, constituting a kind of biplane structure, and which are arranged in staggered relationship with respect to each other. Between these planes 3 and 4, I provide an interval 2 which is more or less important as the case may be.

I arrange these streamlined planes 3 and 4 in such manner that they are substantially horizontal and perpendicular (Figs. 1 to 3 and 6 to 8) or oblique (Fig. 5) with respect to the axis of the fuselage, or again these planes are inclined with respect to the horizontal plane passing through said axis, in such manner as to form a kind of V the branches of which make a large angle with respect to each other and are perpendicular (Fig. 4) or oblique with respect to said axis of the fuselage.

In order to fit or mount said planes on the fuselage and especially at the rear part thereof, I may make use, as shown by Figs. 1 to 5 inclusive, and by Fig. 8, of a streamlined central support provided at the upper part of said fuselage and extending vertically in a fore and aft direction. The planes in question may be engaged in said support as shown by Figs. 1 to 5. According to another embodiment of the invention, only the upper plane 3 is mounted in said support, while the lower plane is made of two elements 4^1 and 4^2 respectively hinged at 6^1 and 6^2 to this support 5 or to fuselage 1.

When the apparatus includes several fuselages or tail supporting beams, such as 1^1 and 1^2, as shown by Figs. 6 and 7, this central support 5 may be dispensed with, and the horizontal planes are mounted directly on said fuselages or beams. The free ends of said planes may be located close to the vertical planes passing through the axes of said fuselages, as shown by Fig. 6, or they may extend, in a more or less overhanging manner, beyond said vertical planes, as shown by Fig. 7.

The horizontal planes are connected together by means of vertical planes 6 and 7, which are located, respectively, at the free ends of said horizontal planes or in positions intermediate between these free ends, as shown in dotted lines by Fig. 2.

These vertical planes may either be rigidly en-

gaged in horizontal planes **3** and **4**, as shown by Figs. 1 to 7, or they may be hinged, at **4***a* and **4***b*, to the corresponding portions of the lower plane **4**.

These vertical planes **6** and **7** are made of sizes such that they can act not only as connections between the horizontal planes but as tail fins, such as they are made at the tips of some supporting surfaces. However, the vertical planes **6** and **7** according to the present invention should not be confounded with these fins, since the latter are supported by each supporting surface or plane, individually, and do not serve to provide a connection, either rigid or articulated, between two horizontal planes, and, more especially, two planes of this kind belonging to a stabilizer device.

If necessary, for reasons of resistance or rigidity, the horizontal planes **3** and **4** may be connected together by means of bracing members **8** suitably distributed over the span of these planes and fixed thereto either rigidly (Figs. 1 to 3) or rigidly to the top plane and pivotally to the lower plane, as illustrated by Fig. 8.

Whatever be the specific embodiment that is chosen, I obtain a stabilizer structure in which the horizontal and vertical streamlined planes, connected together as above explained and including eventually, a central support such as **5**, and/or several bracing members such as **8**, constitute one or several sections of a ladder with rigid angles or including rigid angle articulated angles.

At the rear of one or the other, or both, horizontal planes **3** and **4**, I may hinge bl and **10**, controlled either simultaneously dividually, and acting as adjustable stab elements.

Likewise, I may hinge to the rear edge of cal planes **6** and **7**, and eventually of b members, respectively, vertical panels or **11** and **12**, which act as rudder elements.

Of course, the whole of the stabilizing s instead of being provided at the rear of the machine, as above explained, can be moun well at the front thereof.

Furthermore, I might provide more tha horizontal or vertical planes, while maint the arrangement, connection, and mo characteristics above mentioned.

In any case, I obtain a structure which c tutes a beam capable of absorbing, with the imum of rigidity, the bending stresses whi sult chiefly from the efforts transmitted fro control surfaces of the aircraft.

Furthermore, with the arrangement acc to the present invention, I greatly reduce t or other vibrations which are very consid with the arrangements now in use.

PAUL AIMÉ RICHA

PUBLISHED

MAY 25, 1943.

BY A. P. C.

P. A. RICHARD

STABILIZERS FOR AIRCRAFTS

Filed March 24, 1939

Serial No.

264,004

2 Sheets-Sheet 1

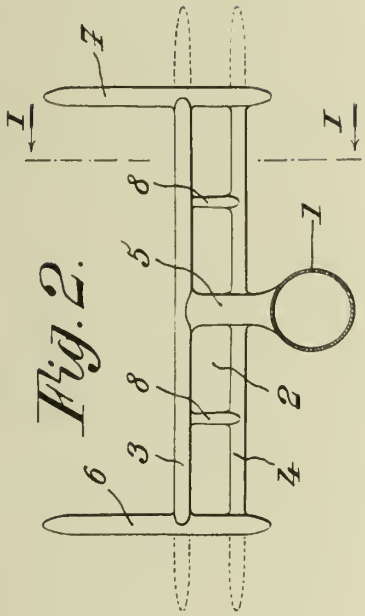

Fig. 2.

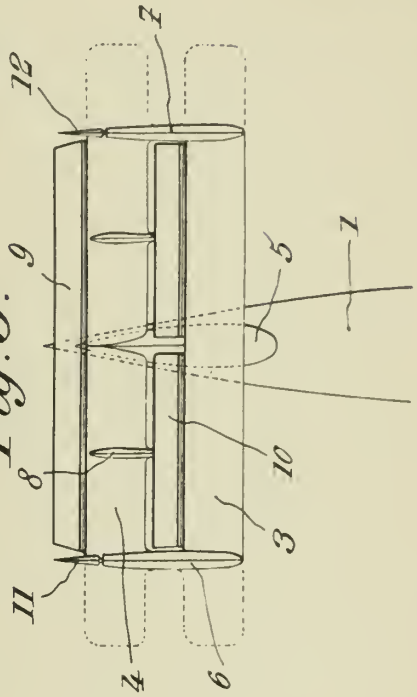

Fig. 3.

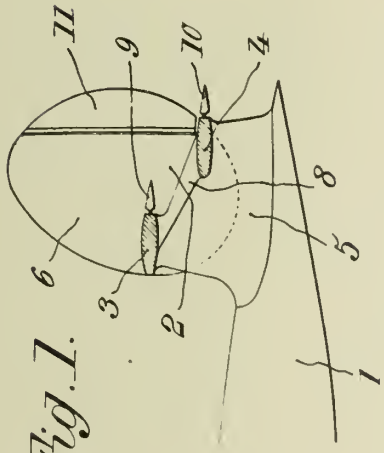

Fig. 1.

Inventor
Paul Aimé Richard

Bailey & Larson
Attorneys

PUBLISHED

MAY 25, 1943.

BY A. P. C.

P. A. RICHARD

STABILIZERS FOR AIRCRAFTS

Filed March 24, 1939

Serial No.

264,004

2 Sheets-Sheet 2

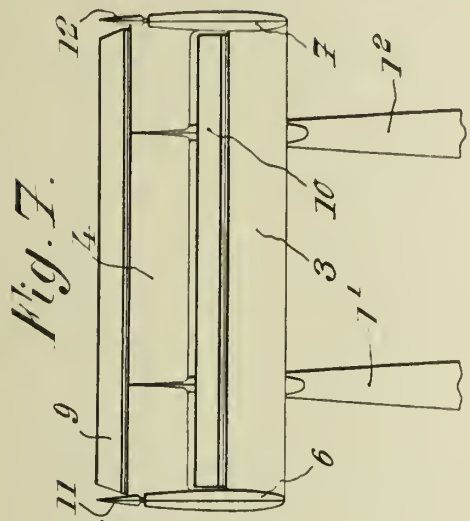

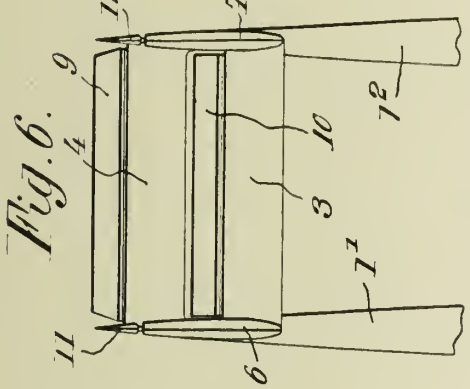

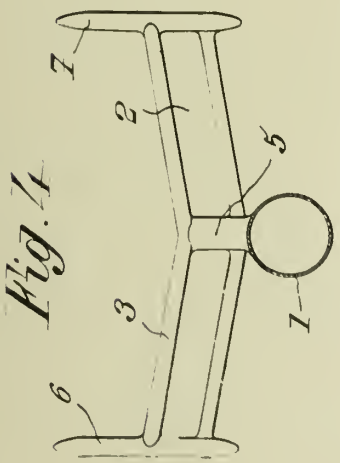

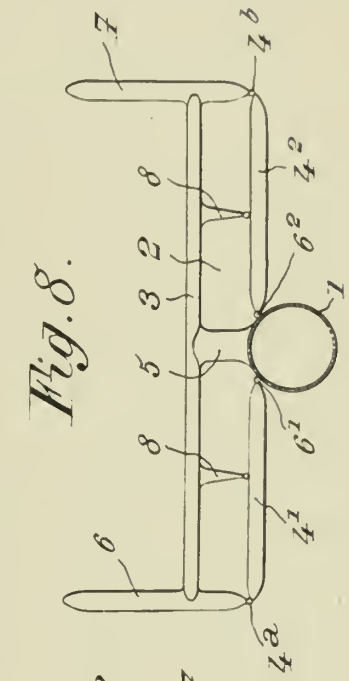

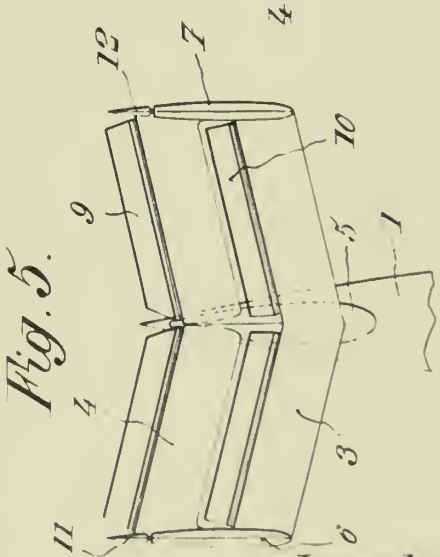

Inventor:
Paul Aimé Richard,

Bailey & Larson

Attorneys

Published May 25, 1943

Serial No. 264,425

ALIEN PROPERTY CUSTODIAN

LIDDED VESSELS

Kotaro Takahashi, Tokyo-shi, Japan; vested in the Alien Property Custodian

Application filed March 27, 1939

This invention relates to improvements in lidded vessels and has for its object to provide a lidded vessel adapted to maintain the lid in place to completely cover the opening of the vessel, no matter whether an instrument for taking out the contents in the vessel is put in the vessel with the handle extended out of the vessel or the implement is taken out of the vessel.

Heretofore, it is usual to put an implement, such as spoon, dipper, ladle and scoop, for taking out the contents, such as liquid and other substances, particularly things to eat and drink, in a vessel and put a lid thereon with the handle extended out of the vessel over its lip or flange, the lid being partially raised to some extent at a part of its edge to leave a space open, or to put the implement in its entirety in the vessel without extending the handle out of the vessel and put the lid thereon, when it is inconvenient to leave the implement somewhere out of the vessel because of some contents clinging to the implement. In the former case, flies, insects, or dirts in the atmospheric air are liable to enter in the vessel through the said open space, and in the latter case, the handle of the implement which may be unclean will be in contact with the contents in the vessel, so that in both cases the contents will be made foul to be at a disadvantage. According to the invention, this disadvantage may be eliminated.

The accompanying drawings illustrate by way of example embodiments of the invention, in which:

Fig. 1 is a side view of a lidded vessel with a lid with a dipper put in the vessel with the handle extended out of the vessel;

Fig. 2 is a plan view of the same, but the dipper being removed;

Figs. 3, 4 and 5 are diagrammatical views of the upper parts of the lidded vessel in aid of illustrating how the dimensions of the spout of the vessel and the annular projection on the under side of the lid must be determined.

Referring to Figs. 1 and 2, 1 represents a vessel and 2 a lid with a knob 3. The lid is shown as being of a diameter as the same as the diameter of the outer edge 5 of the lip or flange 4 of the vessel 2, though the diameter of the lid may be larger or smaller to some extent than the diameter of the outer edge of the flange of the vessel. The vessel is formed with a spout 6, the top edge of which is flush with the upper surface of the flange 4, for permitting the handle 8 of a dipper 7 to extend out of the vessel through it while the dipper is put in the vessel.

The spout is so sized as the radial distance between the outermost edge 9 of the spout 6 and the outer edge 5 of the flange 4 is not larger than the radial distance between the outer edge 5 of the flange 4 and the inner edge 10 thereof on the inside of the vessel. The lid 1 is formed on the under side with an annular projection 11 concentrically therewith, the diameter of which is so selected as one half of the difference between the diameter of the lid and the diameter of the annular projection is equal to the radial distance between the outermost edge 9 of the spout 6 and the inner edge 10 of the flange 4, or larger than that, but not exceeding twice the radial distance between the outer edge 5 and the inner edge 10 of the flange 4.

In order that the determination of the dimensions of the spout of the vessel and the annular projection of the lid may be more clearly understood reference is made to Figs. 3, 4 and 5, in which the same numerals as the reference numerals in Figs. 1 and 2 refer to the similar parts, and the length AB represents the diameter of the lid, the length A'B' the outer diameter of the lip or flange of the vessel, the length AC one half of the difference between the diameters of the lid and the annular projection, the length A'D' the radial distance between the outer and inner edges of the flange of the vessel and the length C'A' the radial distance between the outer edge of the flange of the vessel and the outermost edge of the spout.

According to the invention, when the diameter of the lid is equal to the outside diameter of the flange of the vessel, as shown in Fig. 3, the following conditions must be met:

$$C'A' \leqq A'D', \text{ and}$$

$$AC \geqq C'D', \text{ but} \leqq 2A'D'$$

when the diameter of the lid is larger than the outside diameter of the flange of the vessel, as shown in Fig. 4, the following conditions must be met:

$$C'A' \geqq A'D' + (AB - A'B'), \text{ and}$$

$$AC \geqq C'D', \text{ but} \leqq 2A'D' + (AB - A'B')$$

when the diameter of the lid is smaller than the outside diameter of the flange of the vessel, as shown in Fig. 5, the following conditions must be met:

$$C'A' \geqq A'D' - (A'B' - AB), \text{ and}$$

$$AC \geqq C'D', \text{ but} \leqq 2A'D' - (A'B' - AB)$$

Thus, it will be seen that the vessel according to the invention enables the lid to completely cover

the opening of the vessel, with the exception of the passage of the handle of a dipper in the spout, when the dipper is put in vessel with the handle extended out of the vessel, as shown by the solid line in Fig. 2, and by the displacing the lid until the shoulder of the annular projection abuts against the inside of the vessel adjacent the spout so as to cover the opening of the spout when the dipper is taken out of the vessel, as shown by the dash and dot line in Fig. 2.

The invention is not intended to be limited to the exact forms herein described for purpose of illustration, but should be understood to c modifications and variations thereof within scope of the appended claims, for example place of the annular projection on the u side of the lid, a number of suitable lugs or jections may be provided on the circular lin the coincidence with the circumference of said annular projection, and the outside of body of the vessel may be of various forms, s for example as shown by the dash and dot l in Fig. 1.

KOTARO TAKAHASH

PUBLISHED
MAY 25, 1943.
BY A. P. C.

K. TAKAHASHI
LIDDED VESSELS
Filed March 27, 1939

Serial No.
264,425

Fig. 1.

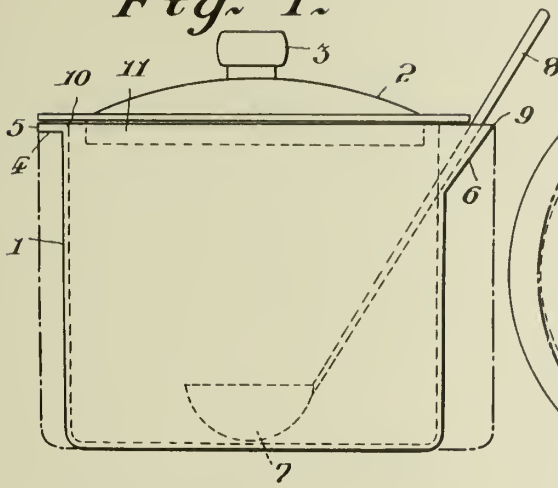

Fig. 2.

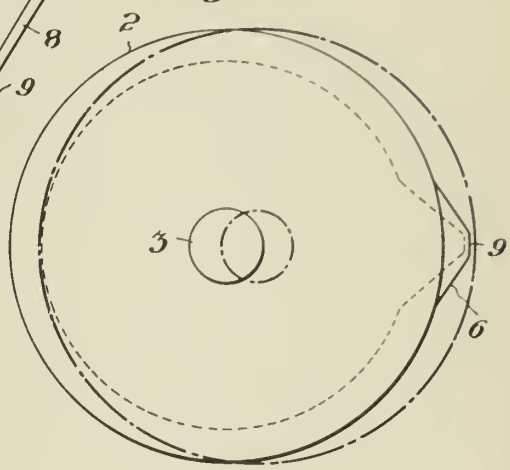

Fig. 3.

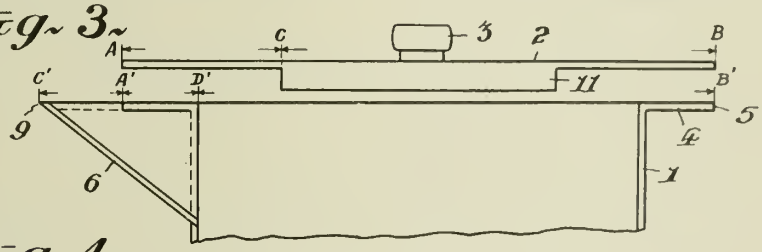

Fig. 4.

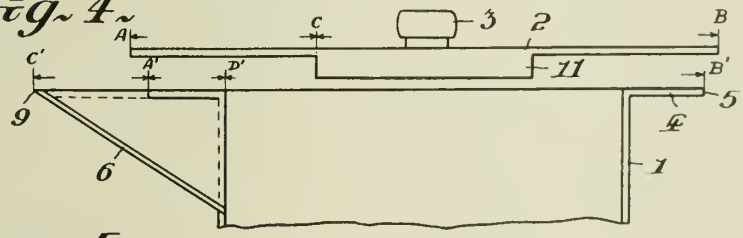

Fig. 5.

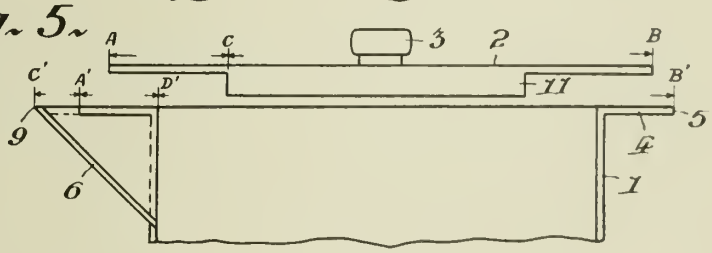

INVENTOR,
K. Takahashi
BY
Glascock Downing & Seebold
ATTORNEYS.

Published May 25, 1943

Serial No. 265,334

ALIEN PROPERTY CUSTODIAN

METHOD OF ATTACHING CLOSURE CAPS

Herman Lewin, Rosmalen, Netherlands; vested in the Alien Property Custodian

Application filed March 31, 1939

The present invention relates to a receptacle closure and more particularly pertains to a cap for sealing a bottle or similar container. This application is a division of my co-pending application Serial No. 100,568, filed September 12, 1936.

One of the objects of the invention resides in the provision of a cap which is particularly simple in construction and having a smooth exterior and the invention includes the method of attaching the cap to a bottle in such a manner as to be removable therefrom with the application of a relatively small force and the cap is particularly suitable for bottles wherein the contents are under a relatively high pressure.

The cap is constructed to be applied to a bottle of the usual type wherein the neck is provided with an enlargement or an annular ridge around the outer part of the neck and the method of applying the cap to such a bottle includes the downward and inward movement of the rolled skirt portion of the cap so as to cause the rolled portion to engage the neck of the bottle below the annular enlargement.

Other and further features of the invention will be more apparent to those skilled in the art upon a consideration of the accompanying drawings and the following description wherein several exemplary embodiments of the cap construction are disclosed and wherein the steps of the method are illustrated and described.

In the drawings:

Figure 1 is an enlarged sectional view of the cap and the preliminary relationship thereof with respect to the bottle neck.

Figure 2 is a similar view illustrating the position of the cap during the attachment thereof to the bottle neck.

Figure 3 is a sectional view of the cap after the same has been fixed on the bottle neck.

Figure 4 is a sectional view of a modified cap construction and arranged in a preliminary position upon the bottle neck.

Figure 5 is a sectional view of the cap shown in Figure 4 illustrating the position of the parts during an intermediate stage of the attaching operation.

Figure 6 is a sectional view of the modified cap illustrating the final position of the parts with the cap attached to the bottle neck.

Referring to Figure 1 the cap 1 consists of relatively thin metal and is provided with a depending skirt having an outwardly rolled lower edge portion. The rolled edge portion may be rolled until the outer edge 2 faces away from the depending skirt of the cap. A sealing disc 3 is arranged within the cap 1 in a well-known manner. The upper part of the bottle neck is indicated at 4 and the neck is provided with an annular enlargement 5.

In attaching the cap to the bottle the upper face of the cap 1 lies against a presser member 15. As illustrated in Fig. 1 a block member 13 is arranged over the cap. The block member 13 is provided with a straight hollow cylindrical upper part 16, a straight conically expanding inner part 14 and a convexly curved conically expanding hollow end part 17.

As the block 13 is moved downwardly as shown in Fig. 2 the rolled skirt portion of the cap is pressed somewhat downwardly and inwardly under the annular enlargement 5 whereby the cap is securely fixed on the bottle neck, and the final position of the parts are shown in Fig. 3.

The form of construction of the cap according to Figs. 4 to 6 has a rolled part 8 which forms the end of a bent-over part 7 which is relatively straight and forms with the depending skirt 6 a V-shaped lower end for the cap when viewed in section.

The method of attaching this type cap to the bottle neck will be apparent from a consideration of Figures 4, 5 and 6 wherein the initial shape of the cap prior to application to the bottle neck is illustrated in Fig. 4. During the initial movement of the block 13 in a downward direction the ductile lower edge of the cap is pressed downwardly and inwardly whereby the relatively straight portion or the part 7 is moved from a generally upright position as shown in Figure 4 until the straight portion 7 lies substantially in a horizontal direction as shown in Figure 6.

During the downward movement of the block 13 the conical portion 14 first engages the upper part of the V-shaped skirt as illustrated in Figure 5. Further downward movement of the block 13 causes the lower end of the V-shaped skirt to move inwardly and downwardly and finally the skirt is deformed into a position as illustrated in Fig. 6 to securely fix the cap to the bottle neck.

Experiments have shown that the cap according to the first form of construction as shown in Fig. 3 is able to withstand a pressure up to about eight atmospheres while the cap according to the second form of construction and application as shown in Fig. 6 will withstand a pressure of approximately 12 atmospheres within the bottle.

While the invention has been described with reference to specific constructional features of the cap and with reference to a particular method of deforming such caps and attaching the same to a bottle neck it will be apparent that changes may be made therein by those skilled in the art.

HERMAN LEWIN.

PUBLISHED

MAY 25, 1943.

BY A. P. C.

H. L. LEWIN

METHOD OF ATTACHING CLOSURE CAPS

Filed March 31, 1939

Serial No.

265,334

2 Sheets-Sheet 1

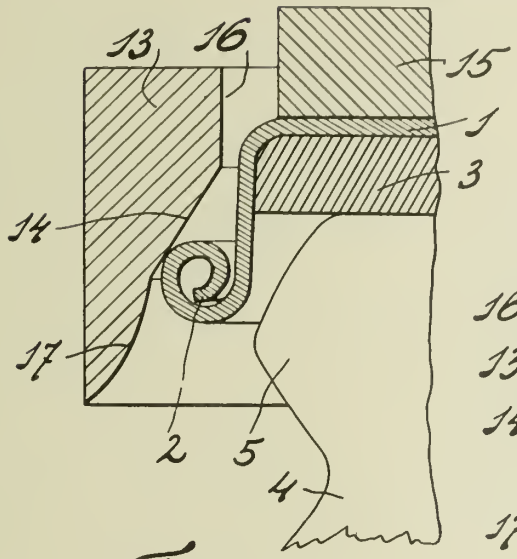

Fig: 1.

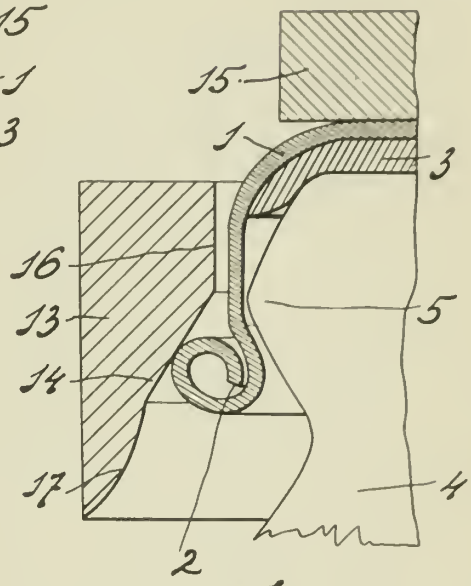

Fig: 2.

Fig: 3.

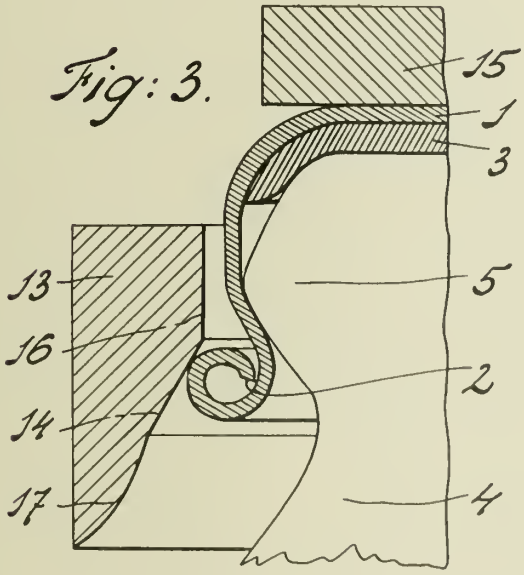

H. Lewin
Inventor

By Glascock Downing & Seebold
Att'ys

PUBLISHED
MAY 25, 1943.
BY A. P. C.

H. L. LEWIN
METHOD OF ATTACHING CLOSURE CAPS
Filed March 31, 1939

Serial No.
265,334
2 Sheets-Sheet 2

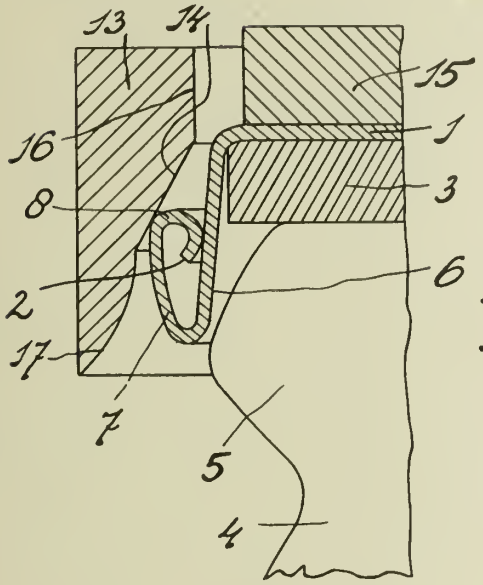

Fig: 4.

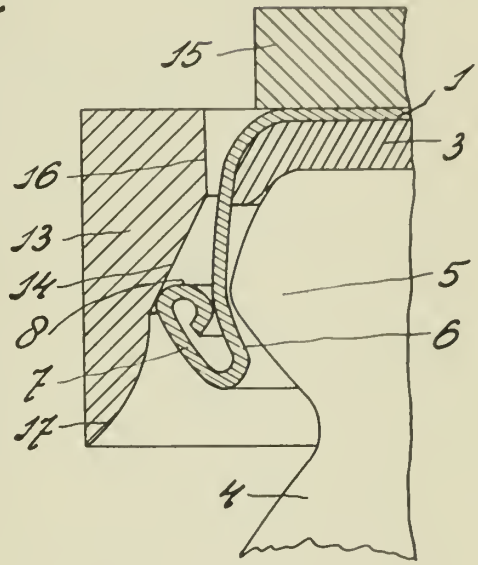

Fig: 5.

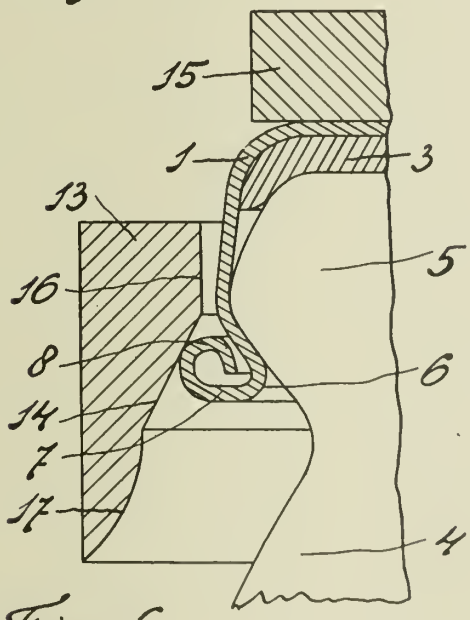

Fig: 6.

Inventor,
H. Lewin

By: Glascock Downing & Seebold
Attys

Published May 25, 1943

Serial No. 267,138

ALIEN PROPERTY CUSTODIAN

DEVICE FOR HEATING SURFACES OF AIRCRAFT EXPOSED TO FREEZING

Otto Neumann, Frankfurt - on - the - Main, Germany; vested in the Alien Property Custodian

Application filed April 10, 1939

To prevent the formation of ice on the lifting surfaces or other parts of aircraft, a known device is to fit heating tubes underneath the surfaces exposed to freezing, such as the front of the wing, through which heating tubes flows water from the engine cooling system or exhaust gases from the engine or in a further manner already proposed, whereby an electrical resistance heater is provided in the said planes. A further known device is to use engine exhaust gases for heating an air current which, by means of a compressor, is blown through an annular space formed by the double membrane of an airship cover. These devices are, however, not adequate, especially in the case of large aeroplanes, to effect a sufficient heating of the surfaces to be protected from freezing, and are particularly ineffective when it is necessary to provide against a considerable variation in temperature, as is the case on oversea and Polar flights.

The invention is likewise concerned with the problem of heating by a heated medium conducted past the surfaces to be heated, but in contradistinction to the known devices it provides for the construction of a heating plant with a separate heater and independent of the motive power of the aeroplane, in which plant the heating medium is circulated in a closed circuit, preferably under pressure. For this purpose a material having a high boiling point, such as oil, is used as the heating medium. This form has the advantage that, by having the heater (boiler) and the pipe line of suitable measurements, an adequate heating can be obtained, even for the largest types of planes. With the use of a special heater which can be removed when not required, the heating temperature can be adapted to exigencies at any time. The closed heat conductor circuit, the separate branches of which can be disconnected according to requirements, in conjunction with a heating medium having a high boiling point, makes it possible to bridge over considerable differences in temperature. Moreover, the device can be used for heating the pilot's cabin and saloon.

The boiler may be of small dimensions if the heating medium is circulated rapidly, so that the additional load on the aeroplane is likewise small. This additional load in comparison with aeroplanes in which the heating device is driven by the driving engine is, however, compensated by the fact that the power of the engine is taken up exclusively to the drive of the aeroplane. Moreover, the additional weight of equipment required for the heating device is likewise compensated by the fact that, by virtue of the small extra load involved, the now necessary safety factor in respect of freezing can be kept low or even eliminated.

The new design is principally intended for large planes engaged in overseas and Polar service in which the danger of freezing is great.

The heater can be of any desired construction and is preferably operated by the same fuel as the engines. It is of advantage to use a blower burner which delivers an atomised spray of oil and air and which develops a high heating temperature with a small weight.

The use of the special heater has the further advantage that, when the driving engines of the planes are driven with heavy fuels, such as crude oil or Diesel engine oil, these fuels can be preheated by the heater.

In the case of short distance planes, the boiler can be replaced by a container provided with a rotary pump, the wall of which container is fitted with a heat-insulating materiaal. Before the commencement of the flight, the container is filled with the preheated medium. By virtue of the heat insulation of the container, the temperature of the heating medium is kept sufficiently high to prevent freezing over short flights.

In order that the invention may be clearly understood and readily carried into effect, reference may be had to the accompanying drawings on which:—

Figure 1 shows diagrammatically a side elevation of an aeroplane showing the invention applied thereto.

Figure 2 is a plan view, and

Figure 3 illustrates, on an enlarged scale, the heater for the heating arrangement.

The drawings show a monoplane with a fuselage or body **1**, planes **2** and landing gear **3**. At the forward end of the fuselage is arranged the pilot's cabin **4**, behind which is situated the saloon **5**. Behind the saloon **5** is a compartment **6** in which is arranged the receptacle **7**, from the upper end of which emerges an outlet pipe **8** which is connected to a T-piece **9**. Each arm of the T-piece **9** is connected to a lead pipe **11** by way of a shut-off valve **10**, the pipe **11** passing along the side wall of the fuselage **5** and which pipe **11** connects with a descending pipe **12** to the mouth of the plane **2**. In the nose **20** of each plane **2** is arranged, from end to end, a lead pipe **13** with the return pipe underneath. The lead pipe **13** is connected with the pipe **11**, whilst the return pipe **14**, by way of the lead **15**, is connected through the union pipe **21** with the

receptacle 7. The valve 16 in the lead 15 forms a non-return, that is to say shuts off the back flow.

The receptacle 7 may be adapted to contain heating material under pressure and particularly oil. For this purpose the heating material is suitably heated in the receptacle 7. Under the receptacle 7 is a burner 17 which receives fuel to be sprayed from the receptacle 18. For this purpose the fuel is sprayed from the burner jet which is connected to the compressed air container.

To start the heating arrangement the burner 17 is lighted and the valves 10 and 16 are opened. The heat is circulated through heating pipe lines 13 and 14 by way of the pipes 11 and 12 and back through the pipe 15 to the receptacle 7. The pipes 13 and 14 are arranged in the leading edge and formation of ice is prevented. The pipes 13 and 14 being arranged in the interior of the nose 20 of the planes form part of the supporting structure. The flow of the heating material can be regulated by the valves 10 and 16. The burner 17 can be regulated so that the required temperature of the pipes 13 and 14 can be obtained. Furthermore the lead 11 behind the outlet 8 can be fitted with a pump, so that the heating material can be circulated as required. By means of the valves 10 and 16 and the union pipes 8 and 21, the container 7 can be disconnected from the burning ar ment. Furthermore the pipes 13 and 14 shaped to form an arrangement of pipes 23 passing to the rear of the plane, whil tail plane 24 can be similarly heated.

The heat arrangement can similarly he saloon 5 and also pilot's cabin 4. In t rangement shown, the T-piece 9 is connec pipe 25 which passes around the saloon back to the return lead 15. The valves 27 regulate the flow of the heating m in the pipe 25.

The supply and return conduits for the ing material to the pipes 13 and 14 as well 23 and 25 are heat insulated. In the c small flights only, the heat container 7 used alone and without the burner constr In this case the heat container, before the mencement of the flight, is filled with material and a rotary pump is placed be the union 8 and the T-piece 9, the rotary being driven by a small electric motor or source of power.

The heating arrangement can be discon from the receptacle 7, together with the 17, the fuel receptacle 18 and pressure rece 19, for which purpose the valves 10 and only required to be closed.

OTTO NEUMA

PUBLISHED

MAY 25, 1943.

BY A. P. C.

O. NEUMANN
DEVICE FOR HEATING SURFACES OF
AIRCRAFT EXPOSED TO FREEZING
Filed April 10, 1939

Serial No.
267,138

Fig.1

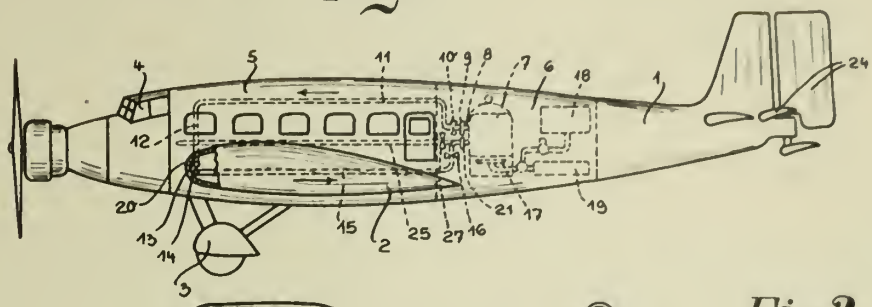

Fig.3

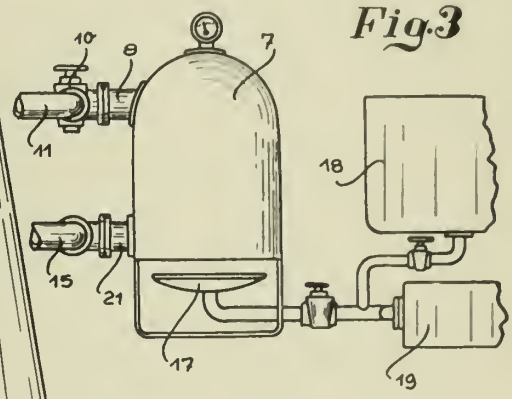

Fig.2

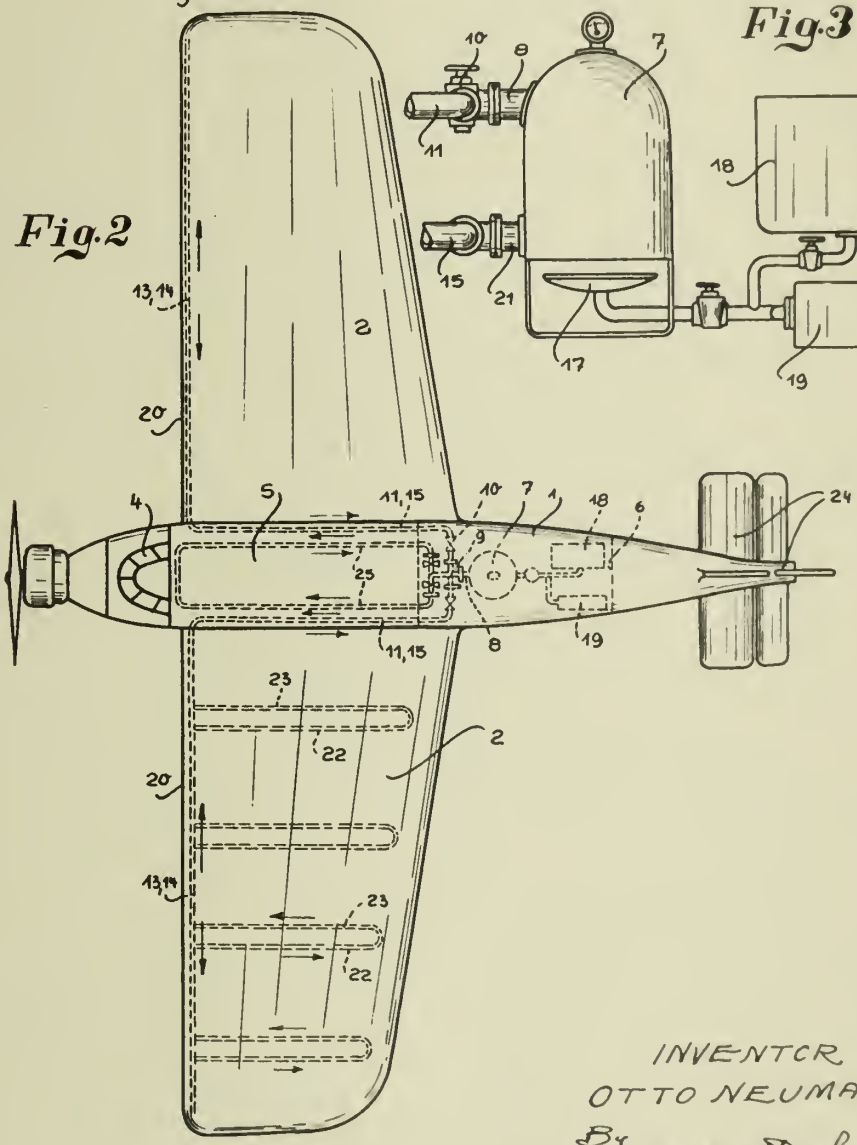

INVENTOR
OTTO NEUMANN
By Wheelan, Ted & Groff,
Attys.

Published May 25, 1943

Serial No. 267,210

ALIEN PROPERTY CUSTODIAN

CATHODE RAY BEAM DEFLECTION APPARATUS

Max Geiger, Berlin, Germany; vested in the Alien Property Custodian

Application filed April 11, 1939

The present invention is concerned with circuit arrangements of the kind serving to cause time proportional magnetic deflection of cathode ray pencils, especially in television.

The invention is concerned with means and measures to be adopted when a second inductance is connected in parallel relation to the deflection coil and for electromagnetic deflection. Such an inductance may be used in conjunction with the deflecting coil when it is necessary to superpose an additional wave onto the normal sawtooth wave of constant amplitude. The normal sawtooth current of constant amplitude produces what is commonly called keystone or trapezium effect in scanning. What is meant by this is the production of a rectangular frame or picture field in a television sending or receiver tube when the axis of the cathode ray tube upon the screen on which the picture field is to be projected is other than vertical. If in such an arrangement all lines of the picture field are attempted to be scanned with sawtooth currents of like amplitude, there results a trapezoidal or trapezium picture frame rather than the desired rectangular frame upon the screen to be scanned. In order to prevent this from happening and to scan a rectangular frame, the amplitude of the sawtooth currents during the scanning of each frame, or in interlaced scanning during an entire line series or sequence, has been changed in such a way that in spite of the obliquity of the scanning beam to the target a rectangular frame is produced. Other instances where a second oscillatory action arises and where the same is superposed upon the normal oscillatory process produced in a deflector coil shall be described further below.

My invention will best be understood by reference to the drawings in which

Fig. 1 shows an arrangement of the prior art, and

Fig. 2 shows another embodiment thereof.

Referring to Fig. 1, points I and II, and points III and IV respectively, are inter-connected. In other words, the deflection coil L whose ohmic resistance is denoted by R_L has been directly connected in the plate circuit of a tube V. The circuit organization known in the art serves for the production of sawtooth current curves for line deflection. The operation of the known arrangement is not essentially altered by the presence of transformer T. The current flowing in coil L is roughly sawtooth in shape, that is to say, a slow, almost straight rise followed by a very brief drop. In trapezium deflection, another periodic action of lower frequency is superposed upon the shape of current obtained in a circuit arrangement Fig. 1. (For instance, in case of sawtooth-shaped modulation of the amplitudes of the coil current as required for trapezium deflection, there arises an additional additive sawtooth-shaped current component due to the damping action of the coil). It has then been discovered that the scanning or reproduction of the lines is disturbed by superposed equalizing or building-up actions. The effects are explained from the fact that the inductance of the secondary winding is connected in parallel to the coil L, and that these two branches, as a general rule, do not have the same time constant. In order to avoid the distortions in the curve shape which will result therefrom, the invention discloses the idea to connect a resistance W in series with the secondary winding of the transformer by the aid of which, in both branches, the ratio between inductance (S and L), and the resistance (W and R_L) may be rendered alike (see Fig. 2). This balancing could also be obtained by winding the secondary winding of the transformer of suitable wire so that this winding may possess the desired values of inductance and resistance. However, the state of balance here suggested could be secured also by choosing the wire thickness or gauge for the deflector coil as well as the wire gauge for the secondary winding of the transformer in such a way that the ratio of inductance and resistance in both arms will become equal to each other.

The invention is not confined to the exemplified embodiment of trapezium deflection here discussed; in fact, it will be found useful in all cases where an inductance is paralleled to the deflector coil, and where two actions of dissimilar frequency are superposed in one and the same circuit. Such a case of superposition is present also when the normal oscillation mechanism of a line deflection generator is transiently interrupted, as may be true, for example, when this generator is rendered inoperative, while the generator for deflection in the other coordinate just happens to produce the short flank or slope of its sawtooth. Also in this instance, as a result of the interruption, owing to coil damping an additive current component of lower frequency is produced which is liable to lead to troublesome building-up actions, and these are prevented by the present invention.

MAX GEIGER.

PUBLISHED

MAY 25, 1943.

BY A. P. C.

M. GEIGER

CATHODE RAY BEAM DEFLECTION APPARATUS

Filed April 11, 1939

Serial No. 267,210

Fig. 1

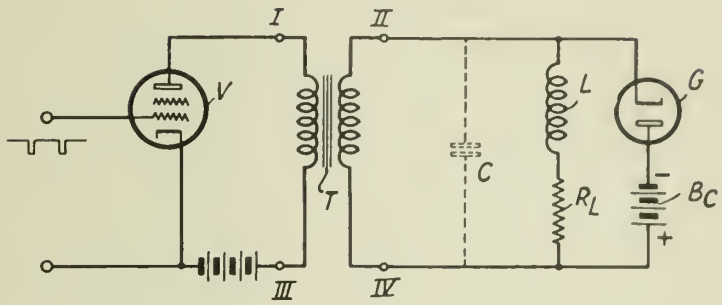

Fig. 2

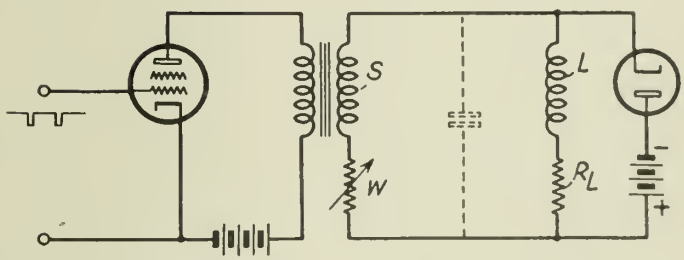

INVENTOR
MAX GEIGER
BY H. S. Grover
ATTORNEY

Published May 25, 1943

Serial No. 268,009

ALIEN PROPERTY CUSTODIAN

APPARATUS FOR GAS TURBINES

George Jendrassik, Budapest, Hungary; vested in the Alien Property Custodian

Application filed April 15, 1939

In sets of equipment composed of a gas turbine and of a compressor for the preliminary compression of the working fluid, in which in the turbine part of the set, in accordance with the kinds of constructional material known at present and suitable for being employed, only moderate maximum temperatures [500 to 600 deg. centigrade] are permissible, it is, in order to obtain high efficiencies, very important to recover the heat of the spent gases leaving the turbine. The recovery of such heat is preferably effected by means of heat exchangers in which the spent gases leaving the turbine are transmitting their heat to the fresh working fluid, already compressed by the compressor in such a manner as to ensure that the temperature of the fresh gas of higher pressure leaving the heat exchanger should approximate as far as possible the temperature of the spent gas of lower pressure entering the heat exchanger, such a heat exchanger being, accordingly, usually a necessary accessory of the equipment. In addition to low thermal loss, it is, of course, essential that the process of heat recovery should take place with as little mechanical loss as possible. This mechanical loss manifests itself in the first place by the loss of work corresponding to the pressure drop set up owing to flow friction during throughflow through the heat exchanger. In addition to all this, the heat exchanger should be designed so as to require little material of construction, this being necessary to prevent the heat exchanger to be expensive and of great weight, and to ensure that its space requirements also should not exceed certain limits.

The heat exchangers proposed in connection with the known gas turbine proposals are, partly, of a type the operation of which is periodical, their working space filled with heat-storing material being inserted alternately into the gas stream to be heated and into the gas stream to be cooled, and, partly, devices in which one fluid flows inside a system of tubes, whilst the other fluid flows outside the tubes of that system or in the tubes, surrounding the first-named tubes, of a second system, each working fluid thus flowing in a separate working space. As regards the devices belonging to the first group of design, they are, if they should be made so as to require a small amount of space and of material, of low efficiency, and further drawbacks of this type of devices are, on the one hand, that the changing-over members, requiring control mechanism also, involved by their alternate operation, are complicated and expensive, and, on the other hand, that the changes of pressure presenting themselves in the working space of the heat exchanger in consequence of the operations of changing over themselves are accompanied by a special loss in work.

In the case of the devices belonging to the group corresponding to the second type of design, the requirements of material are very substantial as compared to those of the first group of devices, seeing that in consequence of their type of design the coefficient of heat transfer of the heat transmitting surfaces is low, and consequently their space requirements are also very high, whilst on the other hand their cost of manufacture is high, and, at the same time, their efficiency also is unsatisfactory.

The working process and apparatus according to the invention relates to gas turbine apparatus equipped with a heat exchanger, and to the economical operation of such apparatus, in which the drawbacks mentioned can be eliminated, whilst the type of design of the heat exchanger employed consisting of bundles of sheets is such that the said heat exchanger is easy to manufacture, relatively inexpensive, possessing a high efficiency, and can, moreover, also be easily cleaned.

In order to enable the invention to be more readily understood, Fig. 1 illustrates the diagrammatical view, shown by way of example, of an apparatus according to the invention, Fig. 2 is a view of one of the sheets of the heat exchanger, whilst Fig. 3 is a cross-section of the sheet, and Fig. 4 of the view of the sheet adjacent to the sheet shown on Fig. 2. Fig. 5 hows a detail [the ribbing] of the cross-section of a bundle of sheets, whilst Fig. 6 is a detail of the cross-section of a bundle of sheets made with a different kind of ribbing. Fig. 7 is a detail of the side elevation of the last-named bundle of sheets. Fig. 8 is a view of a sheet made with a ribbing of different type, whilst Fig. 9 is the view of a further variant. Fig. 10 is the view in perspective of a type of sheet bundle. Fig. 11 is a diagrammatical section of a bundle of sheets, equipped with a cleaning device and with junctions for inlet and outlet, whilst Fig. 12 is the side elevation of the same bundle of sheets. Figs. 14 and 15 are views of two further types of sheet bundles. Fig. 13 shows the diagrammatical section, shown my way of example, of the apparatus according to the invention. Fig. 16 shows the diagrammatical section of a heat exchanger equipment of a somewhat different type, and Fig.

17 shows the diagrammatical cross-section of the latter.

According to the arrangement shown on Fig. 1 it is into the compressor casing 1 that the compressor for the compression of the fresh working fluid entering through the inlet opening 2 is installed, the said compressor being driven through the shaft 3 by the turbine proper arranged in the turbine casing 4. The gas compressed to a substantial pressure passes, after leaving the compressor, through the duct 5 into the heat exchanger 6, and during its throughflow through the latter absorbs the heat of the spent gases leaving the turbine and entering through the pipe 7 into the heat exchanger, following which it leaves the heat exchanger through the pipe 7 into the heat exchanger, following which it leaves the heat exchanger through the pipe 8. Following this the working fluid is, at least in part, passed into the combustion space 9 in which it becomes heated owing to combustion, and then enters the turbine, in which it expands whilst performing work and leaves the working space of the turbine through the pipe 10. The pipe 10 joins on to the duct 7 already named through which the gases leaving the turbine are entering the heat exchanger. Here the spent gases are transmitting their heat to the fresh working fluid and are leaving the heat exchanger through the pipe 11.

The heat exchanger employed in this gas turbine apparatus serves according to the invention for heating gases of higher pressure by means of gases of lower pressure, and is composed of one or more bundles of sheets, stayed one against the other, preferably by close ribbing or in any other manner, which are in places mutually held together (clamped together, possibly soldered together or welded together) and which as far as their effective part is concerned are of mutually equal shape. One side of the sheets of the sheet bundle forms a lateral boundary surface of the throughflow space of the heat transmitting working fluid, whereas their other side forms a boundary wall of the throughflow space of the heat absorbing working fluid, whilst at the same time the spaces between the sheets are, by means of the tight closing (clamping together, soldering together or welding together) of the sheet edges in the direction of throughflow, separated from each other in such a manner, that by dispensing with the said closing along certain sections of the sheet edges, openings for the mutually independent inlet and outlet of the heat-transmitting and of the heat-absorbing working fluid are provided, it being possible to mutually unite the said openings, separately for each working fluid, at the inlet as well as at the outlet.

A sheet for such a heat exchanger sheet bundle is shown on Fig. 2, according to which the inlet and outlet extensions 13 and 14 of pointed arch or triangular shape are joining on to the oblong intermediate part of the sheet 12. On the longitudinal sides of the sheet, between each pair of adjacent sheets, the liner bands 17 and 18 are inserted, which are preferably fixed to the sheets, e. g. by means of welding. These liner bands are, either as extensions of the bands 17, or as independent bands 18, also running along an edge of both the inlet and outlet branches 13 and 14, and are only wanting on the two remaining sides of the said branches, notably either in such a manner as shown on Fig. 3 in connections with the bands 17 and 18 mentioned, or as shown on Fig. 4 at the outlet and inlet branches 21 and 22, respectively, in connection with the bands 1
The sheet bundles forming the heat exch
are obtained by the alternate mutual supe
tion of the sheets fitted with liner band
ranged according to Fig. 2 and Fig. 4, re
tively, if the liner bands and the sheets
ported against them are mutually held tog
tightly by one of the methods mentioned
the various sides of the inlet and outlet bra
alternately inlet and outlet openings ar
tained, one group of which will be open fro
side of the said branches (e. g. according t
2) whilst their other group will be open fro
other side (e. g. according to Fig. 4.) In v
the fact that the pressures of the heat-absc
and heat-transmitting fluids are unequal
necessary to make provision for the absc
of the difference of pressure, so as to ensur
the mutual distance of the mutually ad
sheets should not become altered during c
tion. This purpose is served by the syst
ribs 23, visible on Fig. 3, showing the cros
tion of the sheet illustrated on Fig. 2, th
system of ribs being preferably produc
stamping from the material of the sheet.
type of design according to the inventio
ribs for guiding the same working fluid a
inlet and outlet branches are substantia
mutually equal direction, in consequence wh
parts of fluid entering at different points
inlet opening are covering equal lengths of
between the sheets and the guiding ribs, ar
therefore flow through the heat exchanger
uniform distribution of velocities. The se
taken along the plane A—A, of the bund
tained by the mutual superposition of the
is shown on Fig. 5, on which it is possible
on the one hand, the liner band 17 conn
with the sheets by means of soldering or we
and, on the other hand, the ribs 23, whic
gether with the liner bands mentioned,
the staying of the sheets. In view of th
that the heat transmission of the sheets de
in a high degree on their mutual distance
care should be bestowed on ensuring tha
sheets should not be deformed by the diffe
of pressure mentioned. For this reason th
tual distance D of the ribs stamped int
sheets should preferably not exceed 50 tim
thickness of the sheets. Considering the
shown on Figs. 2 and 4, the working fluid
heated will, for instance, enter the bund
sheets in the direction of the arrow 24 an
leave it in the direction of the arrow 25, wh
the working fluid transmitting heat will
the bundle of sheets in the direction of the
26, and will leave it in the direction of the
27. Accordingly, such part of the sheets
heat exchanger as represents the effective
proper is operating according to the count
principle, which arrangement enables very
ourable heat transfer to be obtained. In
arrangement the inlet and outlet openings
bundle of sheets are arranged in such a m
that two mutually non-communicating ope
(i. e. two openings not belonging to the
working fluid, as, for instance, the openin
and 27, or 13 and 26) are situated at a les
tance from each other, than two openings
municating with each other through the thr
flow space situated between the sheets (e.
openings 13 and 14.)

Fig. 8 shows a type of design of the she
which, in a manner similar to the one in
the arrangement according to Figs. 2 and 4

ates, one working fluid flows into the sheet bundle along the edges **28**, and leaves it along the edges **29**, whereas the other working fluid flows-in along the edges **30** and leaves the bundle along the edges **31**; in the case of this example, however, the ribs **32** are interrupted in the longitudinal direction, and are, moreover, forming an angle with the direction of the flow. The purpose of this arrangement is to produce eddies, the direction of the axis of which is identical with the direction of the flow, such eddies substantially increasing the heat transmission without increasing the resistance to flow in a measure which would exceed that corresponding to the increase of the heat transfer.

In addition to the arrangement described, the most varied arrangements are possible as to the staying, relatively to each other, of the sheets of the sheet bundles. In the embodiment shown by way of example in cross-section on Fig. 6 the sheets **33** and **34** are placed directly on each other, whilst between each two such pairs of sheets the liner band **35** is arranged, the ribs stamped into the sheets being constructed in such a manner that the sheets **33** and **36** are supported on each other by means of ribs stamped into each of the sheets in the direction towards the other sheet, whereas the sheets **33** and **34** are kept at a suitable distance from each other by the short supporting ribs stamped in places into the sheets. In the case of such an arrangement it is advisable to employ the space between the ribs **33** and **34** for the working fluid of higher pressure, whereas the working fluid of lower pressure occupies the space between the sheets **33** and **36**. In the case of such an arrangement the sheets **33** and **36** will be well stayed against the higher pressure by the numerous ribs, whilst for the staying of the sheets **33** and **34** the ribs of small number and short length will be sufficient, because these sheets are not exposed to compression under pressure. In the case of this arrangement the liner bands **35** can be constructed, in accordance with Fig. 7, representing the side elevation of Fig. 6, in such a manner that the said liner bands, interrupted in places, will create the gaps **37**. This can be done, as the liner bands are closing the space of the working fluid of lower pressure, the pressure of which is preferably equal to the pressure of the ambient, and as here, therefore, it is not necessary to make provision for any particularly careful packing. The advantage of the interruption in this manner of the liner bands is that this will enable the loss caused by the capacity of heat conduction of the liner bands to be avoided or substantially reduced, which loss manifests itself by a transfer of heat from the hot end of the heat exchanger towards its cold end.

Should—as will usually be the case with gas turbines—the pressure of the fluid to be heated and of the fluid transmitting heat be different, it will be preferable to choose the depth of the throughflow spaces serving for the two fluids, i. e. the mutual distance of adjacent sheets, at different figures, in consequence whereof the mutual distance of the sheets will be alternately greater and smaller. In general the mutual distance between the sheets forming the boundaries of the flow space of the fluid of higher pressure will be smaller than the mutual distance of the sheets forming the boundaries of the flow of the fluid of lower pressure.

In the longitudinal direction of the ribbing also, the ribbing of the sheets can be constructed in many different ways, regarding which an example has already been described with reference to Fig. 8. By way of a further example of construction a ribbing **38** of wave-line shape is shown on Fig. 9, the purpose of which is, similarly to the ribbing shown on Fig. 8, to increase heat transfer.

Fig. 10 is a sketch in perspective view, of another type of construction of the bundle of sheets. In the case of this arrangement the closing, at the inlet openings of the sheet bundles, of the sheet spaces not communicating with the inlet opening is effected by the direct fastening together, preferably by the welding together of the mutually adjacent sheets [**39** and **40**]. Thereby the gap widths of the inlet openings at the inlet into the sheet bundle gradually diminish owing to the gradual increase of the mutual distance of the sheets fastened together, and in consequence thereof the gas flow will not contract, which fact results in diminished flow losses. At the vertices **41** of the inlet and outlet branches of the bundle of sheets the terminal openings **43** of triangular shape formed between the sheets fastened together in pairs and the liner bands **42** must be packed [preferably by means of welding].

Fig. 11 and 12 are illustrating a bundle of sheets having no external closing sheathing, but fitted with outlet and inlet branches and with cleaning arrangements. The mutually superposed sheets are held together by the terminal sheets **44**, **45** of greater thickness, and further by the reinforcing profile irons or ribs **46**, **46'**, **46''** and **47**, **47'**, **47''** and by the bolts **48**, **48'**, **48''** etc. by which the profile irons or ribs mentioned are drawn together. In addition hereto the sheets may be welded together to each other and/or to the liner bands. The discharge branch **49** consisting of a sheathing sheet fixed e. g. welded in the sheet bundle serves for the discharge of one of the working fluids,—preferably for the discharge of the working fluid of higher pressure—whereas the admission of the working fluid is effected by means of the inlet branch **50** fixed or welded on the sheet bundle likewise. In this case the working fluid of lower pressure enters the sheet bundle along the length of the inlet edges **51** and leaves it along the length of the edges **52**. In view of the fact that it is possible for the dirt, soot, flue dust etc. to become deposited in the heat exchanger, it is advisable to make provision for the cleaning of the latter.

According to a further inventional discovery it is possible to effect the cleaning of the heat exchanger in such a manner that throttling or closing members are provided in the passages of the heat exchanger, preferably at its cold end, by means of which the various passages can be partly or entirely cut-out from the gas flow, in consequence whereof the velocity of the gas in the other passages will become substantially increased and will become suitable for blowing out the dirt from between the sheets of the heat exchanger. Such a cleaning device is visible on Figs. 11 and 12 according to which throttle valves **54**, **54'** mounted on the shaft **55** are provided in the junction ducts **53**, **53'** of the high pressure working fluid to be heated.

The shaft **55** further also carries the lever **57** fitted with the roller **56** keyed on it, which lever is supported on the cam **59** keyed on the shaft **58**. It is similarly on the shaft **55** that the lever **60** is also keyed, which latter is, by means of the yoke **61** joining on articulately to it, connected,

in an articulate manner likewise, to the lever **64** of the throttle valve **63** journalled so as to be pivotable around the shaft **62**. The throttle valve **63** is arranged in the outlet cross-section of the heat transmitting fluid [i. e. of the fluid of lower pressure] and is suitable for throttling this cross-section. If a heat exchanger composed of at least two such heat bundles connected in parallel is employed in connection with the gas turbine, it will be possible, by deflecting the shaft **58** i. e. by deflecting, in the final result, the throttling members **54**, **54'** and **63**, to throttle certain passages of the heat exchanger [in case of only two bundles connected in parallel the passages of one bundle], in consequence whereof, in those passages which are not throttled, the dirt is blown out by the flow of increased intensity.

In the case of the heat exchanger shown on Fig. 13, three sheet bundles [**65**, **66** and **67**], connected in parallel with each other, are employed. The fresh working fluid to be heated flows into the heat exchanger through the pipe **68** and after having become heated, leaves it through the pipe **69**. The heat-transmitting working fluid, the pressure of which is preferably equal to that of the surroundings, enters the insulating sheathing **71** of the heat exchanger through the pipe **70** and in the interior of the said sheathing enters through the inlet openings **72**, into the various sheet bundles, which it leaves through openings provided along the length of the edges **73**, following which it leaves the sheathing of the heat exchanger through the outlet pipe **74**. This device is fitted with the cleaning equipment shown on Figs. 11 and 12, which can be operated by the deflection of a shaft **75** corresponding to the shaft **58** of the arrangement shown on Fig. 11. The operating cams and levers keyed on this shaft are keyed-on in such a manner relatively to each other as to ensure that the throttling of the passages should be preferably effected simultaneously in two sheet bundles, and that it is in one sheet bundle that the passages should remain free. By the gradual deflection of the shaft the place of throttling will be altered in such a manner that the throttling of the passages will take place periodically in a given order of sequence. It is preferable to make provision for the constant uniform alteration of these bundles which are to be connected to throttling, by means of the cleaning equipment, whereby it becomes possible to completely prevent any clogging by dirt of the heat exchanger. In view of the fact that in this manner the heat exchanger will assume temperatures varying during operation, it is necessary in order to avoid any detrimental stresses, to employ, at least on one place, a dilatation member in the ducts leading to the heat exchanger. Such a dilatation device [a pipe branch having the shape of bellows] is shown on Fig. 13, where the pipe branches **76** have been inserted into the duct of the working fluid of higher pressure.

The more detailed investigation of the heat exchanger reveals the fact, that a heat exchanger presenting small losses, and capable of being well utilized, can only be constructed with the aid of such sheet bundles in which the length of the path of travel of the gas is less than 1.2 m. Accordingly, in such cases, when the heating or cooling of a greater quantity of gas is concerned, it is necessary to employ a great number of sheet bundles mutually connected in parallel, in consequence whereof it is necessary to make provi-

sion for ensuring that the weight of the
and inlet pipe branches and similar f
should not amount to a too large proport
the total weight of the sheets.

In view hereof, it is, as far as possible, a
advisable to unite the sheets—as has been
on the preceding figures—at least in pair
even sheets united in groups of three ca
be considered, whilst on the other hand, of c
in case of necessity, simple non-united shee
also be employed.

Sheet bundles shown by way of example,
posed of such sheets, and fitted with outl
inlet branches are shown (with simple shee
Fig. 14, or (with sheets united in groups of
on Fig. 15, the said bundles being, simila
the arrangement according to Figs. 11, 12 a
fitted with the simple inlet and outlet bra
77—**78**, or respectively with the united inl
outlet branches **79**—**80** for the high-pr
working fluid only. By thus dispensing wi
inlet and outlet branches for the working
er lower pressure, and particularly by emp
the uniting arrangements as shown on F
and 17, the weight of the fittings now dis
can really be diminished to the lowest p
limit. As against this, it should be rem
that in such cases when the pressure
working medium of lower pressure also
from the ambient pressure, inlet and
branches are of course required for this
named working fluid also, which, howeve
on the analogy of the uniting arrangeme
be described with reference to Figs. 16 a
also be simplified within a heat exchan
greater size, so as to enable substantial s
in weight to be attained likewise.

Figs. 16 and 17, to which reference ha
made repeatedly, are diagrammatically
senting a method of assembly, shown by
example, of such heat exchanger batter
substantial size. According to these figur
individual sheet bundles **81**—**82** are, in or
obtain an as great simplification and unifi
as possible of the inlet and outlet branch
ranged in such a manner relatively to each
that at the places of meeting of the inl
outlet openings **83** and **84**, respectively,
sheet bundles, such parts of these bund
belong to working fluids of identical pressu
temperature will meet, and will, for the p
of the distribution of one or the other w
fluid, leave the ducts **85**, **85'** and **86**, **86'**, r
tively at right angles to the sheets of the
bundle, open. These ducts are then—acc
to the various working fluids—joining-on t
ther ducts **87**, **87'** or **88**, **88'**, respectively,
are effecting the united inlet and outlet
working fluids.

It is an advantage, deriving from thei
of design, of the embodiments described b
of example, that their heat-transmitting su
are operating with a high coefficient o
transfer, and therefore the capacity of a
exchanger intended for transmitting a
quantity of heat is small. This circumsta
of importance from the point of view of th
ulation of the turbine, notably if at a par
the heat exchanger operates at a tempe
different from that at which it operates
load, the stationary thermal condition
the case of a set of equipment fitted with
exchanger of such a type be arrived at mor
idly than in the case of heat exchangers o
types of design, and this is a circumstan

vantageous also regarding the efficiency of the equipment.

In view of the fact that the abovementioned friction loss due to through flow will be all the greater, the greater the throughflow speed of the working fluid, tt will be preferable to employ a low speed; in this case, however, a high coefficient of heat transfer, and thus, a good utilization of the sheets can only be obtained if the mutual distance of the sheets is small, which circumstance makes it necessary to employ very small distances between sheets. Notably, in the case of a purely laminar flow the coefficient of heat transfer between the flowing medium and the sheets is

$$\alpha \sim \frac{\lambda}{\delta}$$

in which formula λ is the coefficient of heat conduction in a condition of rest of the fluid, whilst δ is the thickness of the sheets. For this reason the mutual distance between the sheets should preferably be less than 2 mm, but it is possible to diminish this distance to as far as 0.5 mm, or even less. In order to prevent any excessive quantity of heat being conveyed by the sheets by conduction from the hot end of the heat exchanger towards its cold end, it is advisable to employ sheets of very small thickness. Accordingly, the thickness of the sheets shouuld be preferably less than 1 mm, e. g. 0.3 mm.

In order to ensure that in the interests of an as favourable efficiency of the heat exchanger as possible, the working fluid to be heated should be able to leave the heat exchanger at nearly the same temperature at which the fluid to be cooled enters it, it is necessary that on both sides of a sheet the weights of the fluid flowing in these parts of the heat exchanger should be mutually equal. The fulfilment of this requirement can be ensured by keeping the proportion of the gaps at both sides of the sheets

$$\left(\frac{s1}{s2}\right)$$

at a constant figure for the various sheets. Similarly it is important, that the condition according to which fluids of equal weight should flow on both sides of the sheet should be satisfied not only for each sheet, but also for each strip of the working parts of the sheets along the length of the flow. The fulfilment of this condition can be ensured if the two working fluids are handled in an equal manner from the point of view of guidance, i. e. if the resistance to flow is rendered equal along any line of flow of the sheet.

From the point of view of the operation at a favourable efficiency of the gas turbine plant is it most essential that the heat exchange device described should be used so as to ensure that the suitable conditions of operation of that device should be permanently maintained. In view of the fact that for the transmission of a given quantity of heat with a given difference of temperatures and with a given flow speed a smaller amount of friction work has to be performed in the case of a flow of laminar character, and as thus the quantity of loss of energy due to friction with which it is necessary to count will be substantially smaller in the case of laminar flow than in the case of a flow of turbulent character, it will be advisable to use the equipment according to the invention under conditions of service likely to assure this. The condition of the flow between the sheets of the heat exchanger being of a laminar character is that the so-called Reynolds figure characteristic for the flow

$$R = \frac{4F}{K} \cdot \frac{c\phi}{\eta}$$

should be lower than a certain critical figure amounting to about 2300, in which formula F is the cross-section of some flow separated in itself, K is the periphery of this cross-section [see the cross-section shown in dotted lines on Fig. 51, c is the average speed of flow, ϕ is the density of the flowing working fluid and η is the factor of viscosity of the fluid. It should be particularly emphasized in connection herewith that what is substantially decisive for the question whether the flow is of a laminar character or not is whether the condition raised above regarding the Raynolds figure is satisfied or not and not whether the flow itself is absolutely laminar in all its flow cross-sections or at any point of any flow cross-section, because the formula, in view of the average figures contained in it, will also be satisfactory in these cases when turbulences, gradually fading-out [abklingend], are set up in places in the flow. The flow will, if its characteristic figures satisfy the limit requirements fixed regarding the Reynolds formula, be of a laminar character also in spite of such phenomena of a turbulent nature, and in fact the creation of such local turbulences, which on their part do not modify the condition of the flow being of laminar character, is, from the point of view of improving the coefficient of heat transfer, not only permissible but directly desirable, regarding which fact an example has been stated in what precedes for the case of the employment of the sheets according to Figs. 8 and 9, respectively. Notably, such local turbulences without increasing on their part the friction resistance of the throughflow in any appreciable extent, are stirring and mixing the so-called boundary layer i. e. that layer of the flowing working fluid which is immediately adjacent to the sheets and which on the one hand, is moving at a diminished flow speed, whilst on the other hand, it acts in a certain extent as a heat insulating layer, and accordingly such local turbulences improve and facilitate heat transfer. As appears from the Reynolds formula, the satisfaction of the limit condition for the flow being of laminar character depends on the one hand on the type of design and suitable dimensioning of the heat exchanger, and on the other hand, on the working conditions which have to be chosen so as to be in conformity therewith [e. g on the figure of the average throughflow speed] and thus it will in any case be possible to ensure by means of the heat exchanger described as part of the invention, i. e. by the apparatus according to the invention, that it should be possible to create and maintain this working condition, essential and advantageous for the operation of the gas turbine plant, whilst at the same time employing a heat exchanger of a type which will be the most suitable from other points of view also.

In a gas turbine plant, assumed by way of example, which operates as constant pressure and in which the working fluid is compressed by the compressor from atmospheric pressure to a pressure of 2 atmospheres [absolute], and in which, further, the temperature ruling at the inlet into the turbine is 450 deg. Centigrade, a quantity of heat of 27,3 cal. has to be introduced during the combustion of each kg of working fluid, as against which the working fluid will absorb a quantity of heat amounting to about 64 cal. per kg in the heat

exchanger. A heat loss of 10% in the heat exchanger will accordingly already increase the total quantity of heat to be introduced by 23.5%, and will thereby diminish the total efficiency in the same extent. In the case of this plant the useful work per kg of gas flowing through the turbine amounts to about 4270 mkg, and accordingly each $^1/_{100}$ of an atmosphere of pressure loss set up in the heat exchanger is liable to diminish the useful work by about 200 mkg, i. e. to diminish the efficiency by about 4.7%. These figures show, in what a great extent, with what degree of perfection exceeding that required by general technical practice the heat exchanger must operate advantageously, in order to prevent that it should diminish the efficiency of the gas turbine plant in an extent which would already render the creation of the gas turbine impossible from an economic point of view.

The gas turbine plant according to the invention, equipped with the heat exchanger described, will, particularly if the service condition outlined above is adhered to, or rather because it enables this condition to be kept easily, owing to its type of design, suit the requirements, difficult to be satisfied, raised, which no gas turbine plant fitted with any other kind of heat exchanger, suitable for any other kind of technical employment, would be able to satisfy. Notably, the heat exchanger of the type described will, not only because it renders throughflow of a laminar character possible, but also for other reasons, be suitable, in case of its being arranged and dimensioned in a suitable manner, for enabling the resistance to flow of the working fluid flowing through it, and therewith the loss resulting from such resistance and substantially influencing the total efficiency, to be reduced to a minimum, without deteriorating the coefficient of heat transfer and indeed whilst substantially im ing the latter. In obtaining these advan on the other hand, a substantial role is play the consideration, discussed above, accordi which it should be possible to keep the wo fluids, each separately, but if possible also i tual dependence, flowing in the working s of the heat exchanger in such a manner working conditions should be approximately tually equal at all points of the flow. As ap from the above, this is rendered possible i most satisfactory manner, and whilst ensu high coefficient of heat transfer, by means heat exchanger composed in the manne scribed of bundles of sheets. The heat excl er described accordingly represents a subst and advantageous necessary accessory of th turbine plant, by means of which the eco of the operation of the whole plane can b fluenced in a decisive manner.

In the heat exchanger it is, in case the operates at high temperatures, advisable (at in the vicinity of the hotter part of the la to employ sheets made of sutiable heat- material.

The compressor, the gas turbine proper, a as the other accessories of the whole equip can, of course, within the scope of the i tion, be of any type of design correspondi the present stage of development of the a engineering, provided that they are on thei part also suitable, on the basis of presen knowledge, for assuring a high total effic and within one set of apparatus it is also po to employ more than one compressor or tu which may possibly be mechanically indepe of each other.

GEORGE JENDRASS

PUBLISHED
MAY 25, 1943.
BY A. P. C.

G. JENDRASSIK
APPARATUS FOR GAS TURBINES
Filed April 15, 1939

Serial No.
268,009
5 Sheets-Sheet 1

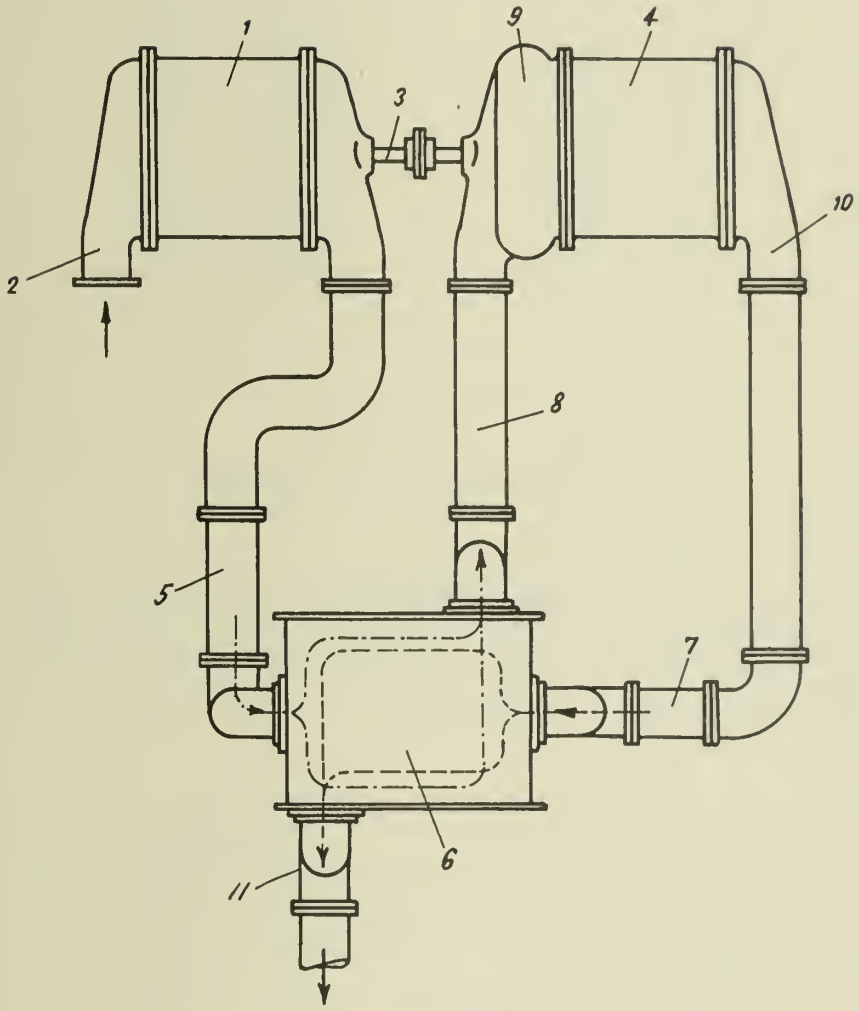

Fig. 1.

Witnesses:
Julius Forges
Edwina Tann

Inventor:
George Jendrassik

PUBLISHED
MAY 25, 1943.
BY A. P. C.

G. JENDRASSIK
APPARATUS FOR GAS TURBINES
Filed April 15, 1939

Serial No.
268,009
5 Sheets-Sheet 2

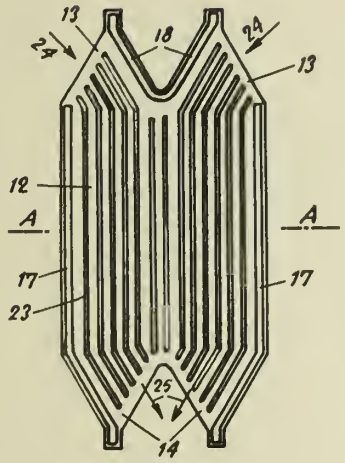

Fig. 2.

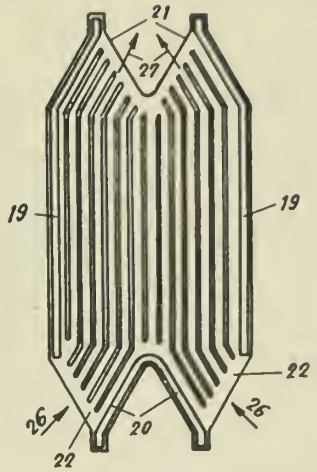

Fig. 4.

Fig. 3.

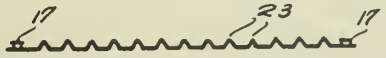

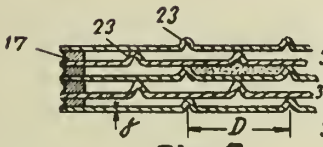

Fig. 5.

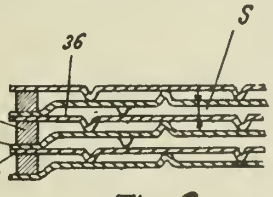

Fig. 6.

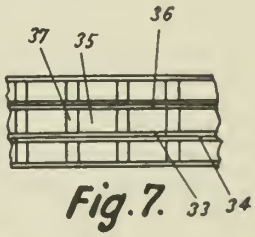

Fig. 7.

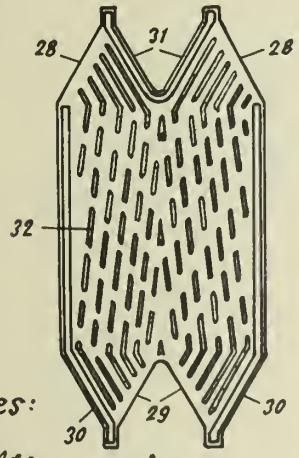

Fig. 8.

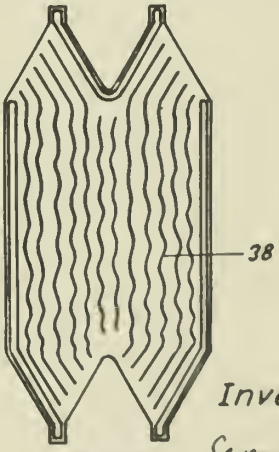

Fig. 9.

Witnesses:
Julius Harger
Edmund Tamm

Inventor:
George Jendrassik

PUBLISHED

MAY 25, 1943.

BY A. P. C.

G. JENDRASSIK

APPARATUS FOR GAS TURBINES

Filed April 15, 1939

Serial No.

268,009

5 Sheets-Sheet 3

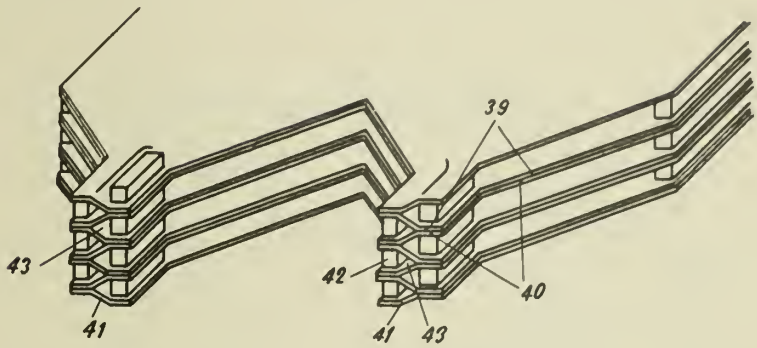

Fig. 10.

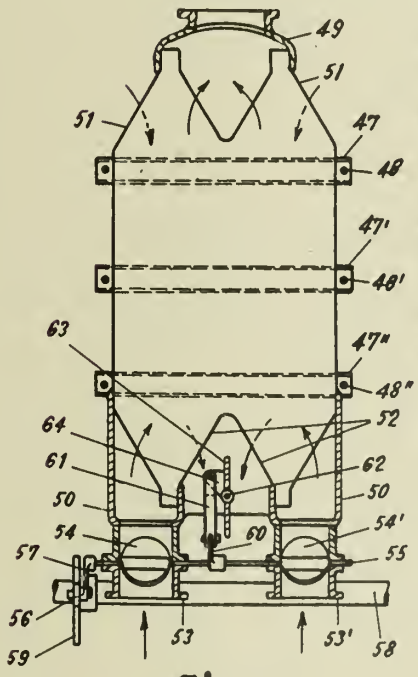

Fig. 11.

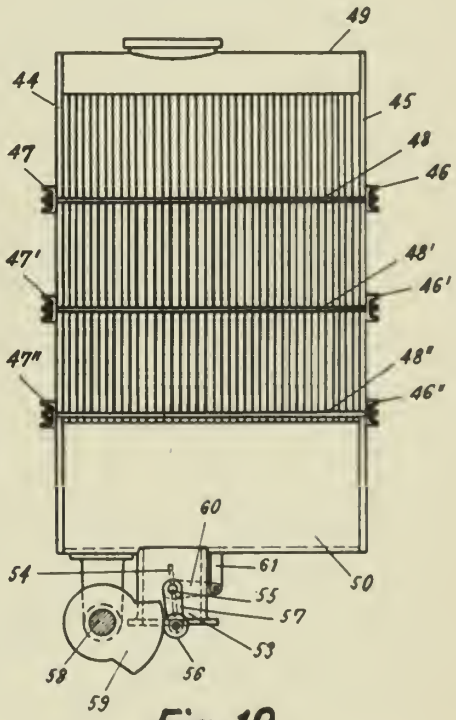

Fig. 12.

Witnesses:

Julius Karger

Edmund Tauer

Inventor:

Jenzi Jendrassik

PUBLISHED
MAY 25, 1943.
BY A. P. C.

G. JENDRASSIK
APPARATUS FOR GAS TURBINES
Filed April 15, 1939

Serial No.
268,009
5 Sheets-Sheet 4

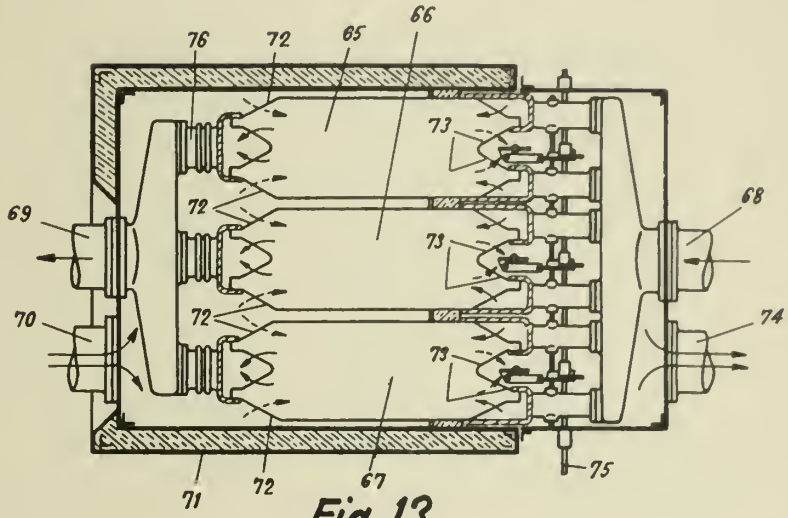

Fig. 13.

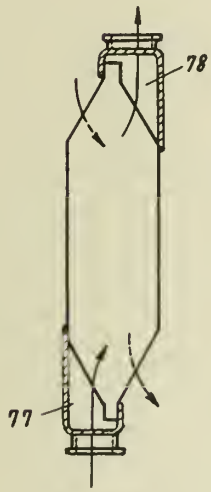

Fig. 14.

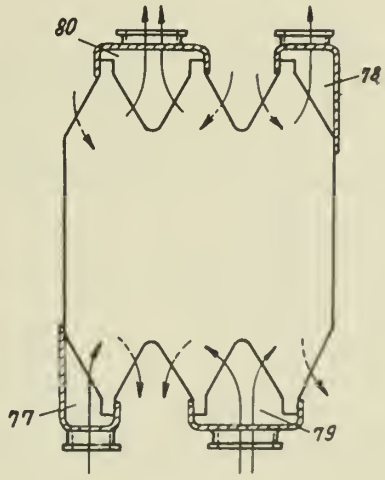

Fig. 15.

Witnesses:
Julius Harger
Edmund Tauer

Inventor:
Georg Jendrassik

PUBLISHED
MAY 25, 1943.
BY A. P. C.

G. JENDRASSIK
APPARATUS FOR GAS TURBINES
Filed April 15, 1939

Serial No.
268,009
5 Sheets-Sheet 5

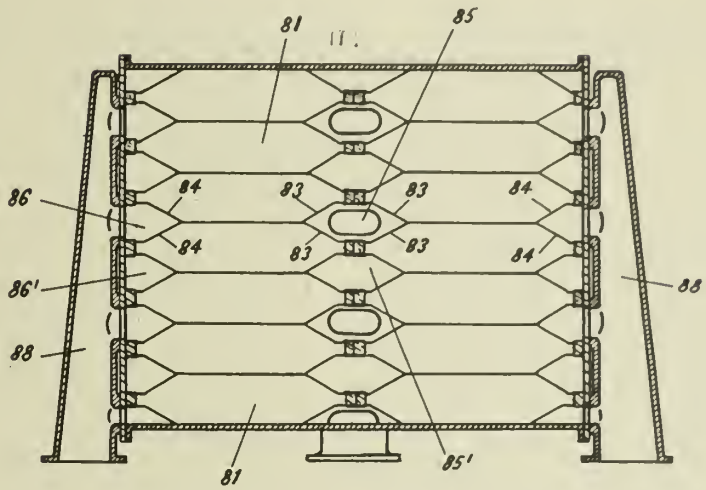

Fig. 16.

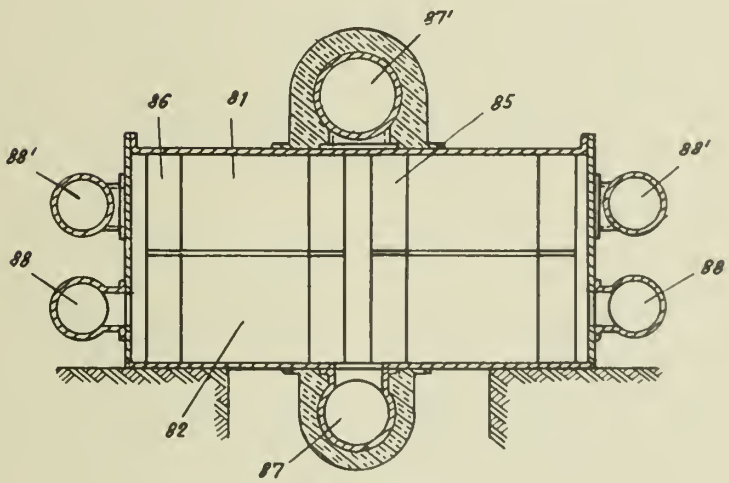

Fig. 17.

Witnesses:
Julius Ferger
Edmund Tamm

Inventor:
George Jendrassik

Published May 25, 1943

Serial No. 268,262

ALIEN PROPERTY CUSTODIAN

CATHODE RAY TUBE

Hanns-Heinz Wolff, Berlin, Germany; vested in the Alien Property Custodian

Application filed April 17, 1939

It is sometimes desirable, and in many cases, for example in television scanning apparatus, absolutely essential, to have a cathode ray tube, the image screen of which exhibits no after-lighting effect, or at least only a very brief and/or very weak after-lighting effect. The known luminous screen materials, so far as they possess a good conversion factor (ratio between the light intensity given off and the energy impinging on the screen), exhibit for the greater part a comparatively strong after-lighting effect. This is disclosed in particular exactly in the case of those luminous substances, the spectral range of which falls, from the light-intensity point of view, within the ranges in which the majority of photo-cells are particularly sensitive in response.

The present invention relates to cathode ray tubes which are so designed, or can be so operated, that the after-lighting effect can be reduced to an amount no longer adapted to create interference. It has been found that if the material of the luminous screen is maintained in a cool condition, and is preferably greatly under-cooled, the after-lighting effect can be very much shortened or even practically suppressed entirely.

The present invention makes use of this property, and consists in the provision of means which enable the substance of the luminous screen of a cathode ray tube to have cooled or undercooled. The invention will be described more particularly in conjunction with certain possible embodiments.

In Fig. 1, 1 is a glass bulb, in which a cathode 2 produces an electronic beam, which is concentrated by an electron-optical system indicated in broken lines and is deflected in the vertical and horizontal directions by a pair of deflecting plates 3 and a pair of coils 4. The substance of the luminous screen 5 is provided on a plate 6, which preferably consists of copper or another good conductive material and is cooled by a cooling current, such as a current of water, which is supplied at the rear through the pipe 7 and is discharged through the pipe 8. The supply of the cooling current to the plate 6 preferably takes place in such fashion that this current is distributed as evenly as possible over the entire surface and, for example by means of a mouthpiece 9 constructed in the form of a rose, flows over the rear of the plate 6. The image resulting on a luminous screen 5 can then be utilized in the known fashion, for example by way of an optical system 10.

The cooling of the luminous screen 5 can also be performed in such a manner that this luminous screen forms the termination of the bulb, as illustrated in Fig. 2. In this figure the bulb 1 is connected in vacuum-tight fashion with the plate 6 carrying the luminous screen. The plate 6 can be furnished with special cooling ribs 11. The cooling in this case takes place by means of a fan 12, which is arranged behind the plate 6 and projects a cooling current of air on to the rear of the plate 6. The remaining elements are furnished with the same numerals as in Fig. 1.

In the arrangements described above the support the luminous screen has been assumed to be of a material impervious to light, although light-transmissive materials may naturally be employed also in these arrangements. If it is desired to employ a light-transmissive material, it is more simple to arrange the supporting plate vertically to the axis of the bulb, in order to avoid the disadvantages of the requirement for an optical or electrical trapezoidal distortion. An arrangement complying with these requirements is illustrated in Fig. 3. Here again the corresponding elements of the Braun tube are furnished with the same reference characters as in Fig. 1. The plate 6, which carries the luminous screen 5 and in this case preferably consists of a plano-parallel sheet of glass, forms the termination of the bulb 1 containing the cathode ray system 2, 3, 4. The plate 6 forms together with a second plate 13, which is conveniently also plano-parallel and preferably likewise consists of glass, in conjunction with the bottom 14 and side portions 15 a trough, which is filled with a cooling liquid 16, this liquid, for the purpose of obtaining a good cooling action, preferably being maintained in flow by an agitating mechanism or other known cooling means in order to effect continuous cooling, or also being additionally cooled by inflow from the exterior. The agitating means or the like would naturally require to be arranged in such a manner that they would not interfere with the optical path of light. In these cases the trough will preferably be made so large that the agitating means or cooling coils are arranged in parts extending laterally beyond the image screen. The use of cooling coils offers particularly advantages, as in this way there is avoided an excessive flow of the liquid and accordingly the formation of bubbles. The arrangement in Fig. 3 is also advantageous because it permits of the use of liquid air, an embodiment of the invention which is to be preferred particularly in

those cases in which particularly extensive suppression of the after-lighting effect is required. The embodiment of the single electrical elements of the arrangement can be carried out in the known fashion as desired. Attention must merely be paid to the fact that naturally in the case of arrangements in which the luminous screen is not disposed vertically to the optical system for the electronic beam either optical or electrical trapezium-distorting means will require to be employed.

The arrangement according to the invention is particularly suitable for television apparatus in which a scene requires to be scanned by a moving beam of light. The additional subject matter of the present invention is constituted by a television scanning device of such a kind in which use is made of a cathode ray tube of the type forming the subject matter of this invention. An embodiment by way of example is illustrated in Fig. 4. In the latter **21** is a tube according to the invention, in which by means of two scanning potentials a linear screen is produced, which by way of the lens **10** scans a scene occurring in a room **22**. The beam of light proceeding from the luminous screen of the tub and scanning the scene is reflected when fa on the scene and then impinges on one or photo-cells **23** which, protected optically aga the direct beam of light, give off or perm the generation of a potential which is pro tional to the light intensity of the poin impingement.

An additional field of use with respect to vision transmission devices is found by the according to the invention in the scannin films. An arrangement of this kind is illustr in principle in Fig. 5. In this case the tub according to the invention impinges by wa the lens **10** on the film **24**, which accordin the darker or lighter shade of the image being scanned projects rays of light of gre or smaller intensity by way of a further len on to a photo-cell **26**, which then supplies desired potential or current.

The photo-cells **23** and **26** can naturall furnished in the known fashion with secon electron multipliers.

HANNS-HEINZ WOLF

PUBLISHED
MAY 25, 1943.
BY A. P. C.

HANNS-HEINZ WOLFF
CATHODE RAY TUBE
Filed April 17, 1939

Serial No.
268,262
2 Sheets-Sheet 1

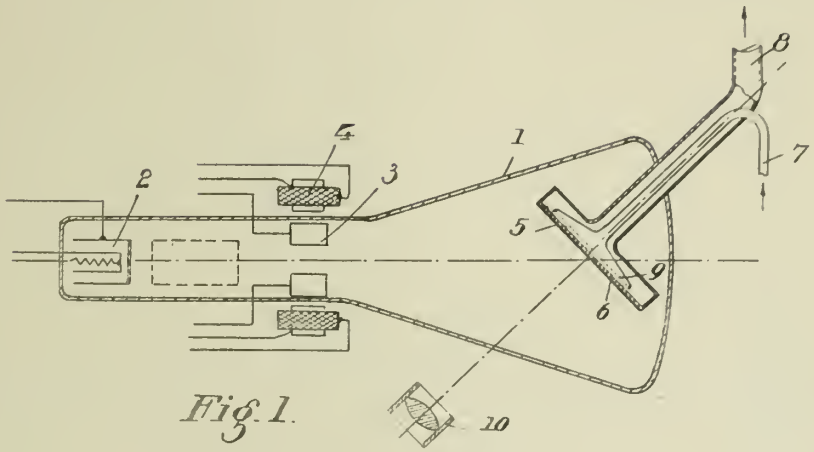

Fig. 1.

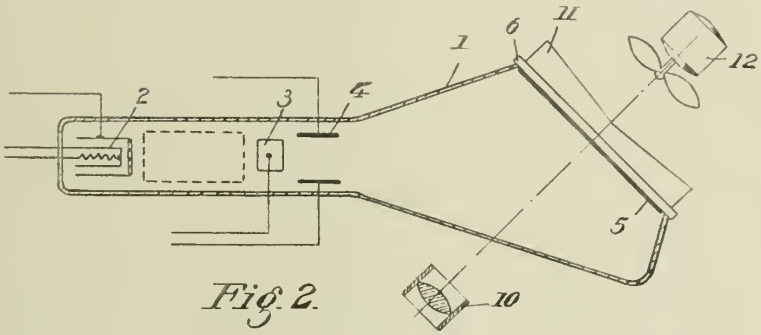

Fig. 2.

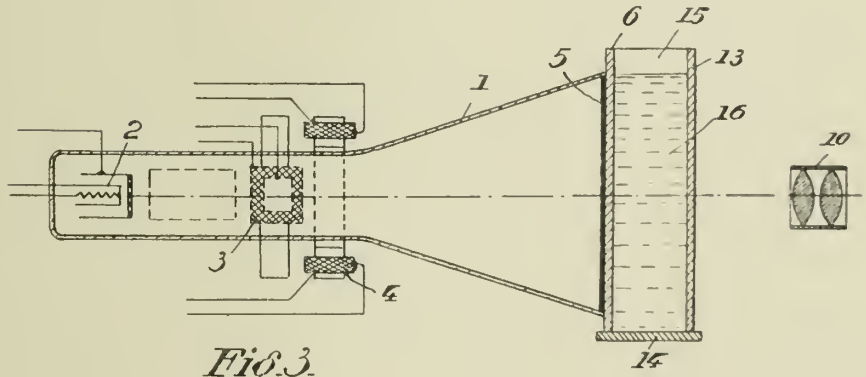

Fig. 3.

Inventor:
Hanns-Heinz Wolff

PUBLISHED
MAY 25, 1943.
BY A. P. C.

HANNS-HEINZ WOLFF
CATHODE RAY TUBE
Filed April 17, 1939

Serial No.
268,262
2 Sheets-Sheet 2

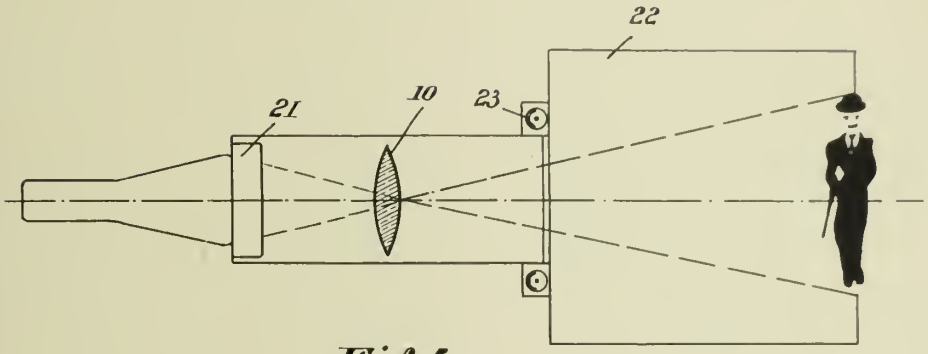

Fig. 4.

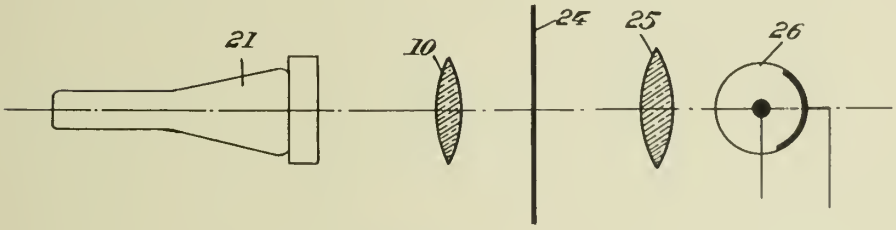

Fig. 5.

Inventor:
Hanns-Heinz Wolff

Published May 25, 1943

Serial No. 268,414

ALIEN PROPERTY CUSTODIAN

METHOD FOR INSIDE RIVETING BY MEANS OF HOLLOW RIVETS AND MEANS FOR ACHIEVING THE SAME

Adamo Cucchi and Giuseppe Manzini, Sesto S. Giovanni, Milan, Italy; vested in the Alien Property Custodian

Application filed April 17, 1939

The object of the present invention is a method for riveting from the inside with hollow rivets for joining plates and the device for achieving said method.

It is known how difficult it is to obtain a perfect riveting of plates fixed against hollow bodies, whose inside is inaccessible. In said riveting, hollow rivets are used, namely small bushes with a flange at one end, forming the head of the rivet.

The problem consists in upsetting the tail-end of the bush, after it has been slipped in the corresponding hole, so that said tail may be flared and upset against the inside face of the plate, thus forming the other head of the rivet.

Device have been proposed to achieve such a work, but have proved slow in practice, due to the fact that the striking member has to increase its diameter after having been slipped into the rivets hole, and has again to diminish in diameter when taken out after the rivet is set.

Besides, the systems heretofore known can be achieved only with complicate and delicate devices.

The method according to the invention solves the problem in the simplest way and consists essentially in this, that it makes use of a beading-head, extending only for a small sector of the bushes periphery and that in the heading operation it revolves around its axis so as to operate gradually over the whole periphery of the bush.

Such an action is achieved with a series of successive blows or a hammering, accompanied by an automatic rotation of the hammer head.

But in another embodiment of the invention, one might just provide pressure, always accompanied by the characteristic rotation, automatic or non-automatic, so that the rivet's tail may be flared gradually and upset against the inner wall.

The device achieving the method disclosed above, consists substantially of a beading tool, slipped in a cavity of a matching snap or reaction member, said tool having its stem divided longitudinally in at least two parts, so that the beading head may enter the hole of the hollow-rivet when the other part of its stem is off, and cover the inside edge of the bush; then the said other part of the stem is replaced in working position. Thus the beading head extends along a sector of the periphery of said bushes' tail and can exert its beading action (by hammering or by simple pressure), when the tool is rotated around its own axis.

The tool is being operated through driving springs in the case of a hammer-riveting, each hammering impulse being combined with an automatic angular displacement of the same tool; but it is apparent that said drive might be obtained through other forces, pneumatic, electromechanic or simply mechanical, such as a pressure by screws, wedges, levers and so on.

The invention will be now disclosed with reference to the attached drawing, given solely as example of an embodiment, limiting in no way the range of the invention.

In the drawing, the first two figures are given just to explain the method, whilst the remaining figures show an embodiment of a hand apparatus, based on the beading-action of a hammer using a spring drive and with angular automatic displacements obtained step to step by a ratchet wheel. Namely:

Fig. 1 is an elevation in section, showing the riveting action obtained within an inaccessible shroud;

Fig. 2 is a plan view of the same, with certain parts missing;

Fig. 3 is a perspective view of the device for performing the riveting;

Fig. 4 is an elevation of the device in section, according to Fig. 3.

Fig. 5 is a lateral section obtained along line 5—5 of Fig. 4;

Figs. 6 and 7 and 8 are sections, cut respectively along lines 6—6, 7—7, 8—8 of Fig. 4;

Fig. 9 is a partial section in a larger scale of the riveting hammer.

With reference to Figs. 1 and 2: A is the box or shroud to be riveted on a proper side to B by means of hollow-rivets 10, having an axial hole 11 for passing into it the riveting tool or hammer 12 and a guiding bar 13. These slide within a counter-snap 14, whereupon the head of the rivet 15 comes to bear. If a rotation is given to the riveting tool around its axis, combined with a longitudinal motion along the same axis, as will be shown hereafter, the edge of the tail of the hollow-rivet 10 is beaded or upset by the hammer 12, towards the outside obtaining the fixture of the two members.

In order to start riveting, first the riveting hammer 12 is introduced in hole 11, the guide-bar 13 being off.

The riveting tool 12 is designed so as to freely go through hole 11 of hollow-rivet 10. The guiding-bar 13 is then slipped in the rivet's hole and riventing is begun. In a similar manner the riveting tool 12 can be taken off.

Figs. 3 to 9 show an embodiment of the riveting device: this has two handles 20, fixed to the outer shroud of the apparatus. Under one of

said handles projects a working-lever 21, whilst under the other handle is placed a lever 22 for lifting and extracting the guiding-bar 13 and for operating on the blocking member as will be disclosed hereafter. Lever 21, besides controlling the riveting hole 12, provides for its rotation so as to move the hammer tool to operate over the whole periphery of the hollow-rivet's tail. Besides, said lever is blocked as soon as the riveting action is terminated namely when the riveting hammer 12 has completed a revolution and is also combined with means for adjusting the spring of the tool 12, according to the length of the rivet and the thickness of the articles to be united.

Lever 21 is fulcrumed in 23 (see Figs. 4 and 6) and has two hinged arms 24, influenced by springs 25, which keep said arms engaged in a round groove 26 cut in a tube 27 to which are applied the riveting hammer and its guide-bar 13.

Arms 24 (see also Fig. 6) carry on their end, revolving balls 28 or rollers for reducing friction between the moving parts, and also cooperating with an appendix in form of a wedge 29 which, on getting between said arms during the action of lever 21, compels them to open, thus allowing tube 27 to disconnect from said arms.

The appendix 29 ends with a screwed stem 30, sliding in a collar 31 and cooperating with a screw 32 provided with an adjusting knob 33 projecting outside.

On the screwed stem 30 is fixed an index 34, running along a graduated scale or a multiple scale, placed outside, the graduation of said scales depending on the thickness of the plates to be united and on the material of the rivets.

To lever 21 is connected a bar 35, controlling a lever 36 fulcrumed in 37 to the body of the apparatus; said lever ends at its lower end with a small roller 38 hinged in 39 (see Fig. 5) to lever 36 and influenced by a flat spring 40, so that said roller 38, due to its lateral shift, can assume a new position 38′, shown in dotted lines in Fig. 5.

A ratchet wheel 41 is made solid to tube 27 (see Fig. 8) by means of an appendix sealing in a longitudinal key-way 41′, cut in said tube, so as to allow its axial motion. The ratchet-wheel 41 is rotated by lever 21 through roller 38, which, by engaging in its teeth, moves it on by a certain angle depending on the number of teeth of the wheel. The latter is also influenced by an elastic stop 42, or by a proper claw or tooth, which, on acting on the teeth of said wheel, prevents any involuntary or accidental rotation of the wheel.

Lever 22 is fulcrumed in 43 (see Fig. 4) to an appendix 44 operating as a stop for lever 21. A small link 45 is articulated on lever 22 and carries on its end small tooth 46 influenced by a spring 47, which compels it to cooperate with crown 48 of a sleeve 49, concentric with tube 27 (Fig. 9).

In the inside of said sleeve is fitted a bolt 50 with a head 51, which retains it within sleeve 49 by means of a helical spring 52, encircling bolt 50. Moreover said bolt has, at its lower end, a projection 53 retaining a ring 54 influenced by spring 52;

In said projection is cut a notch for fixing, by means of said ring, the end 55, provided with a projection 56, of the guide bar 13.

The sleeve 49 is placed in a second bush 57, retained by the action of spring 52 and both are coaxial with tube 27. On the mouth of this tube is cut a projection holding a bush 58 with a cavity, influenced by a second helical spring 59 concentric with spring 52, whilst in cavity 60 enters the end 61 of the riveting member 12, so that the latter moves with tube 27. The end 61 of tool, carries a notch into which a projectio of bush 58 is lodged, so as to obtain the p bility of displacing the guide bar 13 independ from the riveting tool 12.

Bush 57 carries pins 63, which form a bay fixture with grooves 64 cut within the tub being maintained engaged in said grooves b action of spring 59. Lever 22 provides a small roller 65 (see Figs. 4 and 7) carried by 66 and which can operate on a tooth 67 carri lever 21. Said tooth is influenced by a spri and engages at the proper moment a notch 69 Fig. 9) in tube 27, at such a height preventing further operation of lever 21.

Roller 65 rolls on an inclined surface cut guiding sleeve 70 of tube 27, so as to be displ laterally.

Lever 22 carries also extensions 71 (see F and 7) united by a cross-bar 72, which for stop for a fork 73, pivoted in 43 and influenc a spring 74.

Said fork can cooperate, as will be disc hereafter, with a stop in the shape of a frame 75 (see Fig. 6) carried by pivot 76 fix lever 21, and influenced by a spring 77.

The apparatus is completed by a driving s 78, wound round tube 27 and the lever gu bush of the latter 79, ending with a threaded jection 80, to which is screwed-on the cou snap 14, which eventually can bear agains rivet's head.

After the above description, the operatio the apparatus appears evident.

In order to proceed riveting, first the riv tool 12 is slipped in the hole of the rive means of the operation of levers 21 and 22. pressing on the latter, the tooth 46 engages c 48 of bush 49, lifting it; this will lift also guide-bar 13 carried by rod 50. Then on pre lever 21 and due to a small clearance left bet the fork 73 and stop 75, the riveting tool partly pushed out and passes in the hole o rivet. By letting levers 22 go, the guide-ba enters also in the rivet's hole and by letting 21 go, the initial conditions will be restored.

Now, on pressing again on lever 21, it swing freely and arms 24 will cause the dr tube 27 and also of the whole mechanism with it, thus compressing the driving spring

On dropping, arms 24 engage appendix which, due to its wedged shape, will open arms disconnecting them from grooves 26 allowing the quick return of the tube 27 u the action of spring 78. Thus the riveting 12 on its return stroke, causes the upsettin a part of the projecting tail of the rivet.

By operating on lever 21, lever 36 is displ in such a manner that the roller 38 is actu and moves on by one pitch, ratchet whee rotating with it the tube 27 and its mechan In this way the active part of the riveting 12 works over the whole circumference of rivet's tail, automatically, without requiring hand-rotation of the apparatus, and obtai at each stroke the upsetting of a part of rivet, so that after a certain number of str the riveting is completed.

In the case illustrated, the ratchet whe having six teeth, the riveting is completed six strokes. As soon as this is completed tube 27 reaches such a position that tooth carried by lever 21 engages in notch 69, bloc said lever and keeping it lifted or reente Thus the operator is advised that the opera

is completed and can take out the riveting tool **12**.

To do this he presses lever **22**, which, besides lifting guide-bar **13**, in the manner shown above, sets the tooth **67** free by means of roller **65**, which rolls on the inclined surface of bush **70**, setting lever **21** free. On pressing now on the latter, the riveting tool **12** comes out partially, as stated above, and so it can be taken out to go on with the same cycle of operations with the next rivet.

Springs **52** and **59**, placed inside tube **27**, besides maintaining in position the members attached thereto exert also a safety function, when the riveting tool **12** and the guide-bar **13** should encounter, on being depressed, an obstacle preventing them to complete their stroke, on an obstacle to the return of the tube.

This also, the tools **12** and **13** are protected from breakages, so that on their meeting with an obstacle, they can reenter the tube **27**, compressing springs **52** and **59**.

It appears also evident that the replacement of the riveting tool **12**, of the guide-bar **13** and of the counter-snap **14**, to fit them for different diameters of rivets, is quite simple.

It is sufficient to take out said counter-snap and to block temporarily, with known means, the tube **27** and, acting on bush **49** with a screw-driver or other tool, disengage it from the bayonet fitting.

Thus the whole mechanism mounted in tube **27** is taken out and the riveting tool **12** with its guide-bar **13** can be easily changed or replaced.

Notwithstanding our having specified and illustrated a very practical embodiment of the invention, the same may vary and be driven for instance with other known means (electrically) with compressed air, etc. It is to be understood that, in practice, particulars in design and construction may vary without thereby exceeding the limits of the invention and of the patent's protection.

ADAMO CUCCHI.
GIUSEPPE MANZINI.

PUBLISHED

MAY 25, 1943.

BY A. P. C.

A. CUCCHI ET AL

METHOD FOR INSIDE RIVETING BY MEANS OF HOLLOW RIVETS AND MEANS FOR ACHIEVING THE SAME

Filed April 17, 1939

Serial No. 268,414

2 Sheets-Sheet 1

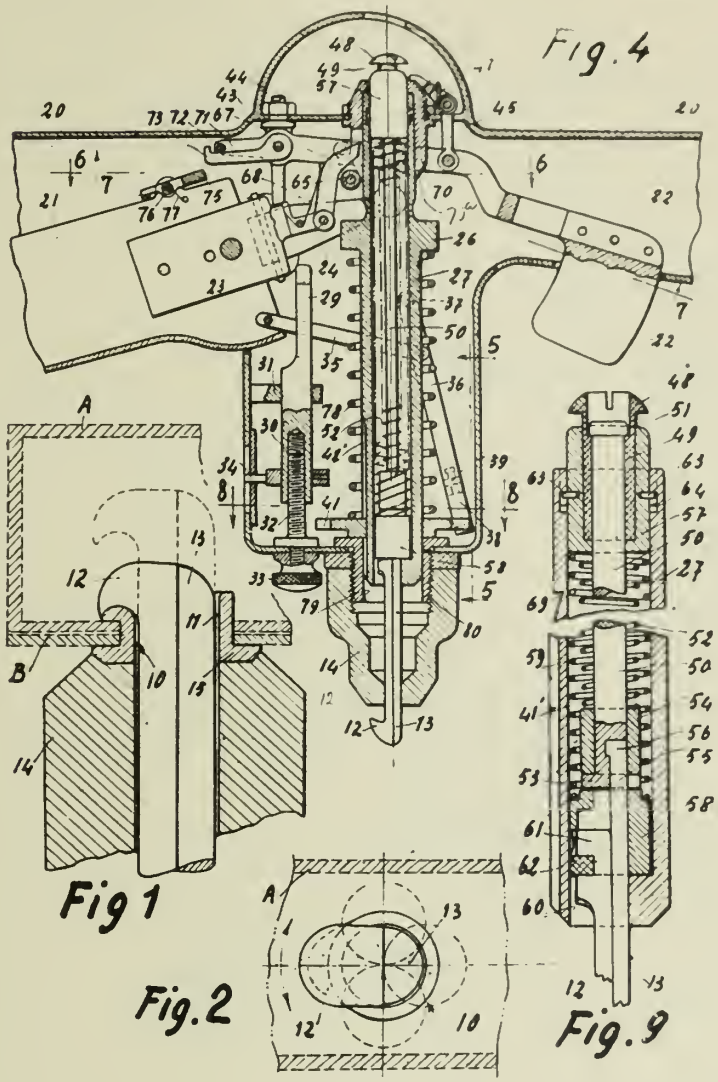

Inventors,
A. Cucchi &
G. Manzini

By: Glascock Downing & Seebold
Attys

PUBLISHED
MAY 25, 1943.
BY A. P. C.

A. CUCCHI ET AL
METHOD FOR INSIDE RIVETING BY MEANS OF HOLLOW RIVETS AND MEANS FOR ACHIEVING THE SAME
Filed April 17, 1939

Serial No. 268,414

2 Sheets-Sheet 2

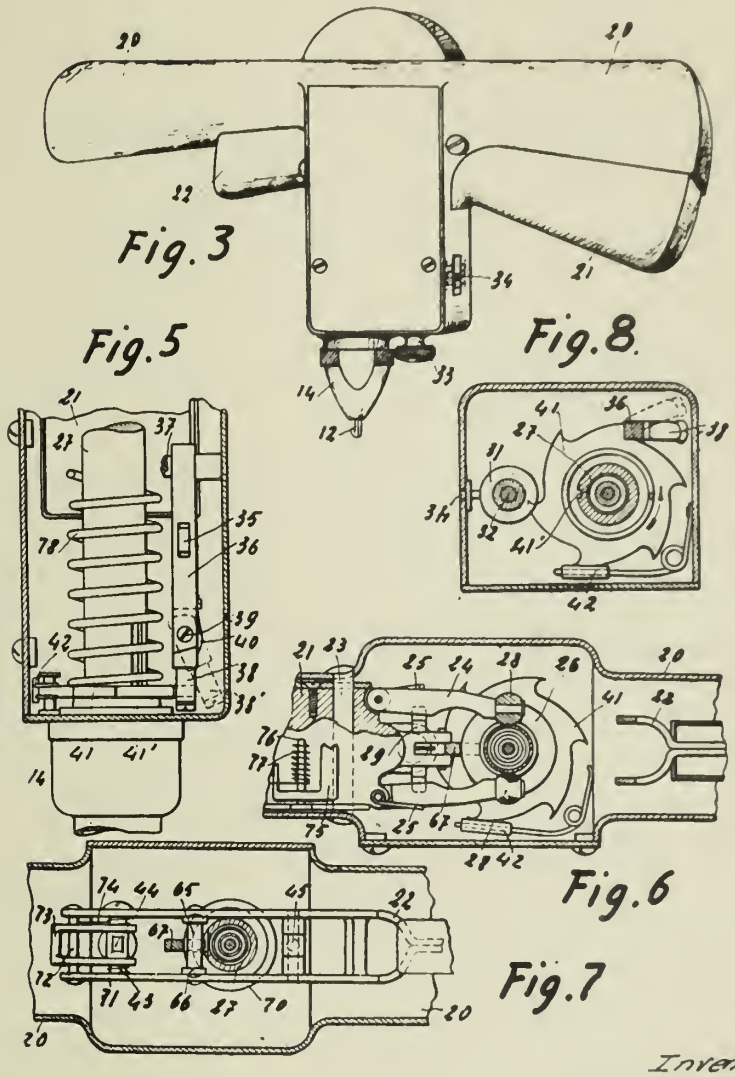

Inventors,
A. Cucchi &
G. Manzini
By: Glascock Downing & Seebold
Attys.

Published May 25, 1943

Serial No. 268,442

ALIEN PROPERTY CUSTODIAN

PACKING MACHINE

Charles Alexandre Nicolle, Montrouge, France;
vested in the Alien Property Custodian

Application filed April 17, 1939

The object of this invention is a machine for mass packing of identical products such as tablets, pills and the like into recipients or containers made of plastic material which has previously been transformed into plates, sheets, bands and the like.

Such containers or wrappers of plastic material, preferably cellulose material are generally constituted by sheets, bands or the like which are transformed by suitable pressing or moulding to cells for receiving the products and a wrapper may comprise either two mate cell sheets which, when superposed, will result in a complete wrapper, or a single cell sheet and a sheet plate laid on said cell sheet.

After being filled up with the products, the cells are closed up or sealed by means of suitable pressing the effect of which may be accompanied by that of heat, and even with the effect of a solvent or a special glue preliminarily spread over the flat sheet.

The object of this invention is to provide a machine for carrying out mechanically successive packing operations of filling the wrappers and closing or sealing the same by suitable pressure, these two operations following one another without interruption so that the machine works in a continuous manner.

The portion of the machine in which is carried out mechanical filling of the wrappers comprises the following principal featured elements:

(*a*) a feeder of sloping chute type which brings the products to pack to a distributer movable under the outlet of the feeder which lays the products into lodgings prepared in the distributer;

(*b*) a mechanism for bringing the distributer step by step under the feeder, to be there filled up with the products to pack;

(*c*) the distributor itself formed in such a manner that whenever it is brought to the position of being exactly above the packing press plate, it automatically empties its content which falls into the plastic packing cells preliminarily disposed on the press plate.

The portion of the machine in which is carried out closing up or sealing of the wrappers is constituted by the combination of a hot operated press with a device of conveying the moulds or dies adapted to cause the moulds containing the packing elements to seal to successively pass into the press, a stop position being especially provided for cooling the moulds, during the travel, after they left the press. The invention comprises also means for rapidly heating and cooling various portions of the moulds.

On the accompanying drawings:

Fig. 1 is a general perspective view of a primary form of the apparatus of the invention for mechanical packing, less the press;

Fig. 2 is a longitudinal section of the apparatus, the press shown in outline;

Fig. 3 is a plan view of the distributer;

Fig. 4 is a side front view of a second form of the apparatus, partly in longitudinal section;

Fig. 5 reproduces a portion of the Fig. 1, with the dose distributer in another position;

Fig. 6 shows a detail of the Fig. 4;

Fig. 7 is an end view of the machine, partly in cross-section;

Fig. 8 is a detail in cross-section of the muzzle portion of the chute;

Fig. 9 is an outer end view of the same muzzle portion;

Fig. 10 is an outer front view of the same muzzle portion when the machine is looked at lengthwise;

Fig. 11 is a side view of the portion of the machine for sealing or closing the wrappers with the products brought by the distributers;

Fig. 12 is a top plan view of the machine;

Fig. 13 is a detail view of a mould or die with means for air removal therefrom;

Fig. 14 is a cross-sectional view of a modified form of the mould of the Fig. 13;

Fig. 15 shows a cross-section particular means for heating the mould.

Fig. 16 is a sketched general view of the whole machine.

In the primary form of the apparatus for mechanical filling the wrappers, the apparatus comprises a frame constituted, for instance, by a base slab 1 and vertical side walls 2 and 3 extending throughout the entire length of the apparatus; this frame supports a fixable lower press plate 4 having a number of through bores 5 corresponding in number and disposition to the number of objects to be packed up by one single operation as provided for on one packing sheet. Each of said side walls of the frame has a longitudinal groove 6 to form a slide guide for shifting a distributer which thus may travel along the frame of the machine. This distributer comprises two superposed plates 7 and 8 the individual thickness of which is equal to the thickness of a tablet or to the diameter of a pill if pills are handled. The upper plate 7 of the distributer has a number of rows of holes 9 complying with the dimension of the objects to pack up, tablets or pills or like.

and said holes being disposed in the same manner as the through bores 5 of the press plate 4. The lower plate 8 of the distributer has the holes 9a corresponding in number and disposition exactly to the holes 9 of the upper plate 7. The holes 9a of the plate 8 normally are not opposite to the holes 9 of the upper plate, but are off-set diagonally as shown on the Fig. 3, so that then the holes 9 are obtruded by the lower plate (Fig. 2). The lower plate 8 may be shifted diagonally under the plate 7 to bring its holes 9a against those of the upper plate. For this purpose, the two plates 7—8 are united by four bolts 10 screwed into the plate 8 and their caps 11 are in abutting engagement with the upper face of the plate 7. The latter is provided with four slot-holes 12 obliquely disposed inclined at 45°, so that the plate 8 may swing horizontally under the plate 7. The length of the slot-holes 12 is such as to enable the holes 9a to sit exactly against the holes 9 of the upper plate 7. The plate 8 is normally held in its off-set relation to the plate 7 by a spring 13 pressing against one of the bolts 10 (Fig. 3).

Above the distributer just described, is disposed an automatic feeder as follows:

This feeder comprises a funnel hopper 14 extending in the direction of the width of the machine and tapering towards its base into a narrow slit the opening of which corresponds to the thickness of a tablet or to the diameter of a pill. Beyond this slit the hopper is prolonged by a sloping chute 15 the passage height of which is equal to the thickness of a tablet; the lower end of this chute terminates by an outlet gullet 16, this outlet being level with the top of the distributer plate 7. In the direction of the width of the machine, the chute 15 is divided by partitions into a number of gutters, for instance four gutters which correspond to the number of rows of holes 9 in the distributer. The top 17 which forms a cover for said gutters is preferable of glass or another transparent material so that the descent of the tablets or pills may be followed. The outlet gullet 16 is shaped so that the tablets which slope down flatly in the chute 15 redress themselves horizontally before lying down on the plate 7. On the other hand, the upper edges of the little partitions separating the different chutes 15 are sharpened into points whereby each tablet, owing to unstable equilibrium when it meets those points, falls down by itself into one of the gutters.

The frame work of the apparatus is provided at one of its ends with two lateral cheek plates 18; to one of them is secured a bracket 19 supporting a motor 20 which is shown as an electric motor, but which may also be a spring motor or any other mover. This motor makes turn a transversal shaft 21 provided with an eccentric 22 (Fig. 2) for the purpose of imparting a vibrating movement to the funnel hopper 14 which leans upon said eccentric. On the shaft 21 is secured also a sheave 23 which by means of belting 24 and a second sheave 25 rotates a transversal shaft 26 supported by the two cheek plates 18 and provided with a finger 27. This finger 27 is disposed so as to meet, when rotating with shaft 26, a mate finger 28 set on a third transversal shaft 29 and which it drives on a short distance and then lets escape. The shaft 29 in its turn is provided close to the cheek plates 18 with two pawls 30—31 which are in contact with the teeth of two indented racks 32—33 respectively mounted on the top of the upper plate 7 of the distributor. A spring 34 pulling a little lever 35 secured to end of the shaft 29 normally holds the p 30—31 in contact with the teeth of the r 32—33. The distributer 7—8 may be move the direction of the arrow F (Fig. 2) by trac power of a rope 36 attached to the plate 7 pulled, over a sheave 37, by a counter-weight dicated by the letter P. For the purpose of m ing in the direction opposed to the arrow F, distributer 7—8 is provided with an operating handle 38, and a stop member 39 for the pla of the distributer is provided at the outer of the frame. The press is indicated in a g eral way by 40 (Fig. 2) being disposed al the fixable mould or die 4.

The operation of the apparatus is as follow

At stand-still, the distributer 7—8 is in position indicated on the Fig. 2. A certain qu tity of tablets, as may be desired, is from tim time charged into the funnel hopper 14. Be this operation this tablets may have been pla in bulk on an inclined tray provided with a s able slide gate operated by hand or auton ically to let pass this tablets into the hopper. motor is then started. The eccentric 27 ca the hopper to bob thus promoting the enterin the tablets into the chute 15. To avoid stopp and wedging up of the tablets, the inside of hopper is provided with a number of rods ha smooth surface 42 or with a number of scatt apattle rods which may be moved from the mo The tablets descend in the gutters formed wi the chute 15, in as many ranges as there are gutters and when arrived at the bottom of gutters, they lie down flat on the top of plate 7 of the distributer, owing to a special f of the gutter gullet 16.

The distributor 7—8, as already described, te to be moved in the direction of the arrow F the counterweight P, but it is normally held movable by the two pawls 30—31 which ar engagement with the teeth of the racks 32— The finger 27 of the shaft 26 causes, at each t the finger 28 of the shaft 29 to move on a fe distance and then escapes. The finger 29 d ing the shaft 19 disengages the pawls 30- from the two racks 32—33 thereby permit the distributer 7—8 to advance by one to length in the direction of the arrow F. As s as this advance is effectuated, the distrib comes to stop again, and the first transve row of holes 9 of the plate 7 takes position u the range of gutters of the chute 15, so that tablets immediately fall into those holes. the following escapement of the pawls 30- from the racks 32—33, the distributer 7—8 vances again by one tooth and a new row holes 9 is filled up and so on until the distrib be completely loaded.

By this time, the operator seizes the opera handle 38 and causes the distributor 7—8 slide towards the right (Figs. 1 and 2). Du this sliding path of the distributer, the fal of the tablets contained in the feeding gulle stopped by the non-perforated portion of plate 7 the length of which is conveniently ad ed for this purpose. The displacement of distributer towards the right is stopped a matically by the contact of the lower pla with the stop member 39. This contact ca to stop at first the lower plate 8, whilst the up plate 7 may still move on through a small len This relative displacement of the plates 7—8 sults, owing to the disposition of the slot h 10, in causing the lower plate 8 to swing di

nally under the upper plate 7 and to bring all the holes 9a of the lower plate against the holes 9 of the upper plate. In other words, all the holes 9 which contain the tablets open at the bottom so as to cause the tablets to immediately fall into the packing cells 43 which have previously been laid on the lower press plate 4 (Fig. 2) positioned as shown. The operator brings then the distributer 7—8 to the left and a new phase of filling up the distributer may begin again. While said new filling up is going on, a mate packing portion or flat sheet is laid upon the sheet 43 for closing up the packing, and these two packing elements are then united by known means of pressure.

The figures 4 to 10 show a modified form of the apparatus just described, said modified form showing the following outstanding features:

Whilst in the primary form of the apparatus the products contained in the hopper progress practically in continuous manner within the gutters of the sloping chute of the feeder, their passage in the present form of the apparatus is effected at definite time intervals, in synchronism with the displacements of the distributer placed at the bottom of the feeder. This is obtained by means of a transmission operated by a hand lever placed at one side of the apparatus and arranged so as to cause, simultaneously with the recoiling of the distributer to the position in which he evacuates its content, the displacement of an endless band which receives from the hopper a determined quantity of products and discharges the same into the feeder.

Another feature of the present form of the apparatus consists of a device which, placed at the bottom of the feeder, prevents the products coming out of the gutters from getting in contact with the distributer before said recoiling movement of the distributers is finished.

The invention comprises some more devices of detail which will be set forth from the description with reference to the accompanying drawings, as follows:

In the present form of the invention, the apparatus is mounted upon a socle or a working bench comprising a table plate 50 and the legs 50. The motor 20, instead of being placed upon a bracket secured to one cheek plate 18, is installed inside of the bench which may be partially closed. As in the primary form of the invention, the distributer is formed by two plates 7—3 sliding one upon another and having through bores 9 and 9a. The upper plate 7 is pulled back by the rope 36 passed over the sheave 37 and pulled down by a counter-weight P attached to its end. In the present form, the distributer instead of being guided in the side grooves of the frame work, is guided between the rollers 52. The indented racks 32—33 are transferred to the lower face of the plate 7, and each of the pawls 30—31 which permit the racks to escape tooth by tooth therefrom, receives its oscillating movement from a tickler or pusher 53 guided through a socket 54 set in the table plate 50, and the ticklers or pushers 53 lean upon the contour of two cams 55—56 secured on a transversal shaft 57 bearing a sheave 58 which is rotated through the sheave 59 of the motor through the belting 60. Another transversal shaft 61 is provided outside of the frame work with a control lever 62 for operating by hand the displacements of the distributer in the direction of the arrow F, that is to say from the left to the right as per the Fig. 4. For this purpose, in the interior and at each side of the frame is established a spur gear train comprising an indented sector secured on the transversal shaft 61, an indented wheel 64 in engagement with said sector and mounted on a second transversal shaft 65, and another gear wheel 66 secured on a third transversal shaft 67, and each of the latter gear wheels 66 is in engagement with one indented rack 68 secured to the lower surface of the plate 7 of the distributer. The lower 8 of the distributer is provided with a convenient stop claw 69 which at the passage end of the distributer, strikes against the stop member 39 which is the same as in the primary form of the invention. In abutment with the top of the distributer is the feeder which is doubly featured, firstly by the fact of being separated from the funnel hopper 14, and secondly by the fact of being mounted elastically for the purpose of responding to the action of a vibrator 70 which may be constituted, for example, by a trembler of electric bell type or the like. For this purpose, the feeder is supported by means of one or several angular members 71 secured to its back face and one or several springs 72 and 73 mounted on a cross-bar 74, and the tension of these springs is controlled by a nut 75 screwed on a threaded rod 76 disposed in the interior of each spring. The feeder terminates, close to the distributer, by a block portion 77 in which are provided as many passages or openings 78 as there are the descent gutters in the feeder, said openings corresponding by spacing to the holes 9 and 9a of the plates 7—8 of the distributer.

The Fig. 8, 9 and 10 show at a larger scale said block portion of the feeder with the special arrangement provided therein for preventing, at a certain moment of the operation, the objects such as tablets or pastils or the like 79 piled up in the openings 78 of the block portion from reaching the distributer. Said arrangement comprises a number of blades 80 made of any convenient material and spaced exactly as are spaced the openings 78 of the block; these blades are placed behind the block at the right of each of the openings. Said blades 80 are mounted on an oscillating bar 81 prolonged at both ends by an axle 82 extending through a support 83. On the other hand, each blade has near its lower end a little finger 84 or a projecting point extending through a hole 85 open to the corresponding opening of the block and adapted to very slightly penetrate into said opening outside of the supports 83 each oscillatable axle 82 of the bar 81 is provided with a leg or lever 86 which, through the action of the stop claw 67—68 placed on the plate 7 of the distributer, may take two positions, one which corresponds to the penetration of the finger or projecting point 84 through the openings 78 and the other one corresponding to the removal of these fingers from said openings, as will be explained in the course of the description of the manner in which the apparatus is operated. A braking or retaining device will be provided for maintaining the legs 86 in said two positions.

For certain tablet shapes such as, for instance, very thin tablets or lenticular ones which do not lend themselves to be easily seized by their edges, the stopping device is fixed preferably at the bottom of the feeder gutters as shown in 80a and 81a of the Fig. 8. In this case the height of the openings 78 is reduced to contain but two or even one single tablet, and the stop claws 67—68 are no more placed at the passage end of the distributer, but before the last or the last but one hole,

so as to exhaust the tablet charges contained in the openings 78.

In the present form of the invention, the funnel hopper 14 is separated from the feeder, and it deposes its contents upon a movable pathway constituted by an endless band 89 stretched over two rollers 90—91. Said band 89 receives an intermittent advancing movement synchronous with the feeding movement of the distributor by means of a sheave 92 which is secured to the transversal shaft 61 at the end opposed to the end of the lever 62, a belt or rope 93 and a second sheave 94 forming a part of one half 95 of a claw-coupling that may turn loose on the shaft 96 of the roller 91, whilst the other half 97 of this coupling is secured to said shaft 96. The claws or dogs of the coupling 95—97 are cut so as to cause the endless band 89 to move but in the forward direction indicated by the arrow A (Fig. 4). The endless band 89 may also be moved forward by hand for the purpose which will be set forth further below, by rotating a checkered button or the like 98 secured to the axle 96 bonded to the roller. Of course, the half 97 of the coupling must be spring controlled on its axle in order that its claws might escape from those of the other half of the coupling, while the checkered button 93 is turned backward.

To prevent the tablets from adhering to the surface of the endless band, a rapid vibrating movement is imparted to the band by means of the following device shown in detail on the Fig. 6. On the transversal shaft 57 is secured a sheave 99 which through a belt or rope 100 drives a second sheave 101 mounted at the outer side of the cheek plate 18 on an axle 102 to which it transmits its rotating movement. On the axle 102 and close to the inner face of the cheek 18 is secured a cam 103 upon the contour of which leans a double-armed lever 104 which oscillates about a little pivot 105. To the lever end 104 which does not lean upon the cam 103 is secured a vibrator finger 106 placed under the upper branch of the endless band 89 and extending but on a small distance under the band. When the motor 20 is set in motion, the rapid rotation imparted to the cam 103 causes, through the lever 104, the band to be rapidly flapped with the finger 106 and, owing to the rigidity this endless band must necessarily possess, the flaps thus effected produce in the whole extent of the band vibrations which prevent the objects from adhering to said band.

Finally, in order to disengage the tablets, pastils and the like or chippings thereof which may be wedged in between the bottom of the hopper 14 and the endless band 89, the hopper 14 is not mounted rigidly on the machine but is provided with the lugs 107 enabling it to turn about an axle 108 for the purpose of regulating the feed delivery or else removing it from the machine if necessary.

The operation of the apparatus is as follows:

At stand-still, the apparatus is in the position indicated on the Fig. 4. The feeder and the distributer are entirely empty of articles to pack in, but a provision thereof is in the hopper 14.

In order to start the apparatus, the operator turns the checkered button 98 to make move forward the band 89 on which are deposed the products coming out of hopper 14, said products then fall into the gutters of the chute 15. When said gutters are filled, the operator stops the movement of the band 89. The tablets, pastils and the like are superposed in the openings 78 of the block portion 77 of the feeder and the lower tablets descend into the first row of holes the plate 7 of the distributer. The motor then started so that by action of the cam 5 the tickler or pusher 53 the pawls 30—31 up an oscillating movement which cause racks 32—33, i. e. the whole of the distribu move forward. The rows of distributer are then successively filled up as in the pri form of the apparatus. At the same tim vibrator 70, operates upon the chute 14 c feeder to promote the descent of the tablets on the other hand, the second vibrating me comprising the cam 103 and the little finge operates upon the movable band 89. Whe distributer 7—8 arrives at the inner end course to the left (Fig. 4), the claws 87 op upon the two levers 86 and make penetrat points 84 into the interior of the openings gutters thus blocking up the further desce tablets; the purpose of this arrangement permit the distributer filled up with tabl freely return to the right without risk of ho on the products.

When the distributer is filled up, the ope pulls the control lever 62 thereby moving th tributer to the right (Fig. 4) with the aid spur gear train 63—64—66 and the racks 68. wards the end of the course, the claw 69 se to the lower plate 8 of the distributer strik stop member 39 so that the upper plate 7 continues to move. The holes 9 and 9a of th tributer are then superposed and the ta parts and the like may fall into the packin ments previously placed in the cells 5 o mould 4 (Fig. 2). Similarly, when the distr 7—8 arrives towards the end of its passage left, the claw 88 operates upon the lever 86 results in making recoil the points 84 and s free the lower tablets which are within the ings 78 and which may then fall into the h of the plate 7 of the distributer. The wo cycle may then be started again as abov scribed.

Once filled up the moulds are carried o the machine for sealing or closing up operat the packings, this machine being close by longation of the charging machine abov scribed.

Such a machine shown on Figs. 11 and 12 accompanying drawings one of the consti elements thereof being a hot operated pr any known type, and it is characterized by ing moulds or dies adapted travel across th chine following a circular passage compris number of stands at least one of which is des to the cooling operation. Another feature o machine resides in that the dies are thin, en independent of the heating trays of the that, furthermore, they have a very much re mass and are made of a material which rapidly grow hot or cool such as hardened minium so that the products contained i wrappers be exposed to high temperature as a time as possible, and special arrangements be carried out for removing hot expanded air the moulds and thus prevent the articles to from noxious effects of hot air during the in the moulds or dies between heating press or plates.

The hot press which one of the constituen ments of the machine may be of any known In the present example, the press compri stationary upper summer 201 supporting th per heating tray or plate 202, and a movable plate 203 supporting the lower heating tray

Normally the trays **202** and **204** are asunder, as it is shown on the Fig. 11, in order that the dies or moulds may be easily introduced in between them. The lower plate **203** is abutted through the piston **205** guided in a socket **206** to a lifting cam **207** arranged on a double-armed lever which may turn upon a pivot **208** and whose small arm **209** bears a counter-weight **210**, whilst its longer arm **211** terminates by an operating handle **212**.

On the axle **213** passed through the table **214** of the machine is mounted, a little above the table, a revolving plate **215** which in the present example is four-sided. Opposite to each side of the revolving plate **215** is placed a mould **216** supported by two straps **217** secured to the plate **215**. Said straps may be flexible, to a certain extent, to permit the moulds **216** to be compressed without being wedged in between the heating trays **202—204** of the press. Angular members or consols such as **218** (Fig. 11) may be fixed to the end sides of the machine to support the moulds or dies at different stands. The revolving plate **215** is held fast at each of its four stands by a lever **219** (Fig. 12) turning upon a pivot **220** under the table **214** and provided with a stop finger **221** which may be engaged in one of four holes **222** bored on the lower face of the plate **215**. The disengagement of the revolving plate is effectuated by pressing a button **223** fixed to the end of the lever **219** and extended over the upper level of the table **214**. The lever **219** is controlled from underneath by a spring not shown.

The moulds **216** of which the Fig. 12 shows but the lower portion that in the present example is supposed to be provided with a number of cells, comprise a bottom or bearing die **224** and a counter-die **225**. These two die portions may be independent one of another and in that case marking pins will be employed to correctly close up the die, or else they may be interhinged as shown in **226** of the Fig. 11. As already stated, they are made of a metal rapidly growing hot or cold, such as, for instance, hardened aluminium, and also show a reduced metal mass to hasten heating and cooling the same.

The operation of the machine is as follows:

At the stand I, the operator receives the mould coming out from the stand IV where it cooled. He takes up, and then places in the bearing die **224** a new lower packing sheet and sends the mould to the stand II where the cells are filled up either by hand or mechanically with the aid of an automatic apparatus installed sidewise close to the machine to distribute solid or pulverous products. The apparatuses of this type are described, for instance, in the French patents to the present applicant's name and entitled "Apparatus for mass packing of identical products" dated the 20th April 1938 and "Packings in plastic materials" dated the 23rd of December 1937.

As soon as filling operation is finished, the operator places the upper sheet or cover **227** of the packing and sends the shut up mould over to the stand III in between the heating trays **202—204** of the press whereby, the lever **221** being lowered, the mould is compressed and heated to produce a sealing of packing. During this operation, the mould which precedingly was at the stand III is held stationary at the stand IV to cool, the cooling time being used for dismounting and placing in a new packing material the mould which presently is at the stand I. In this manner the apparatus works in a continuous cycle of rapid succession and without loss of time.

The Figs. 13, 14, 15 show several modified forms of moulds which may be employed with the machine, together with arrangements therein for securing the packings to seal against effects due to expansion of heated air and also for diminishing metal mass of the mould itself.

The Fig. 13 refers to the case of individual packings having individual covers **227**, and of a bottom die **224** seated directly on a heating tray.

The counter die **225** has, as shown on the Fig. 13, carved portions opposite the cells of the bottom die **224**. As the expansion of the air imprisoned in said carved portions may deform per pressure the covers **227** to seal, since the latter are softened owing to their stay in a strongly heated atmosphere, it may then be necessary to provide lateral air removing holes, such as **228** or upward ones such as **229**, the latter being prolonged by air removal holes **230** provided in the upper press plate **202** (Fig. 13). The deforming of the covers **227** is thus prevented. The Fig. 14 refers to the case of packing formed in two cell sheets. The die which is formed by two portions **224—225** is seated between the heating plates **202—224** of the press as described with reference to the Figs. 11 and 12. Here, the two die portions are provided with air removal holes **229** prolonged by the holes **230** provided in the two heating plates, and, in addition, alleviation holes **231** are made in the die portions comprises between packing cells for the purpose of diminishing the die metal mass which will thereby grow hot or cool more rapidly.

In the modified form shown in the Fig. 15, the halves of the die instead of being heated by direct contact with the heating plates **201—203**, are heated by means of adductors **232** in the form of cylinders or otherwise shaped members extended from the heating plates or coming therewith and abutting to the die portions corresponding to the places where the sealings are to be operated. The figure shows that in the present case the die appears to be extremely alleviated and that special air removing holes are superfluous, since the air may freely circulate between heating adductors **232**.

Returning now again to the machine, it will be noted that the machine is mounted on the very frame **50** of the filling apparatus in such a manner that the revolving plate **216** is level with the table and that the moulds **4** are sealed placed exactly under the distributor as shown on the Fig. 5. Cette machine may be used for sealing any simple cellulose packing or packings constituted by several material thicknesses with interposed impermeabilizing layer.

CHARLES ALEXANDRE NICOLLE.

PUBLISHED
MAY 25, 1943.
BY A. P. C.

C. A. NICOLLE
PACKING MACHINE
Filed April 17, 1939

Serial No.
268,442
9 Sheets-Sheet 1

Fig. 1

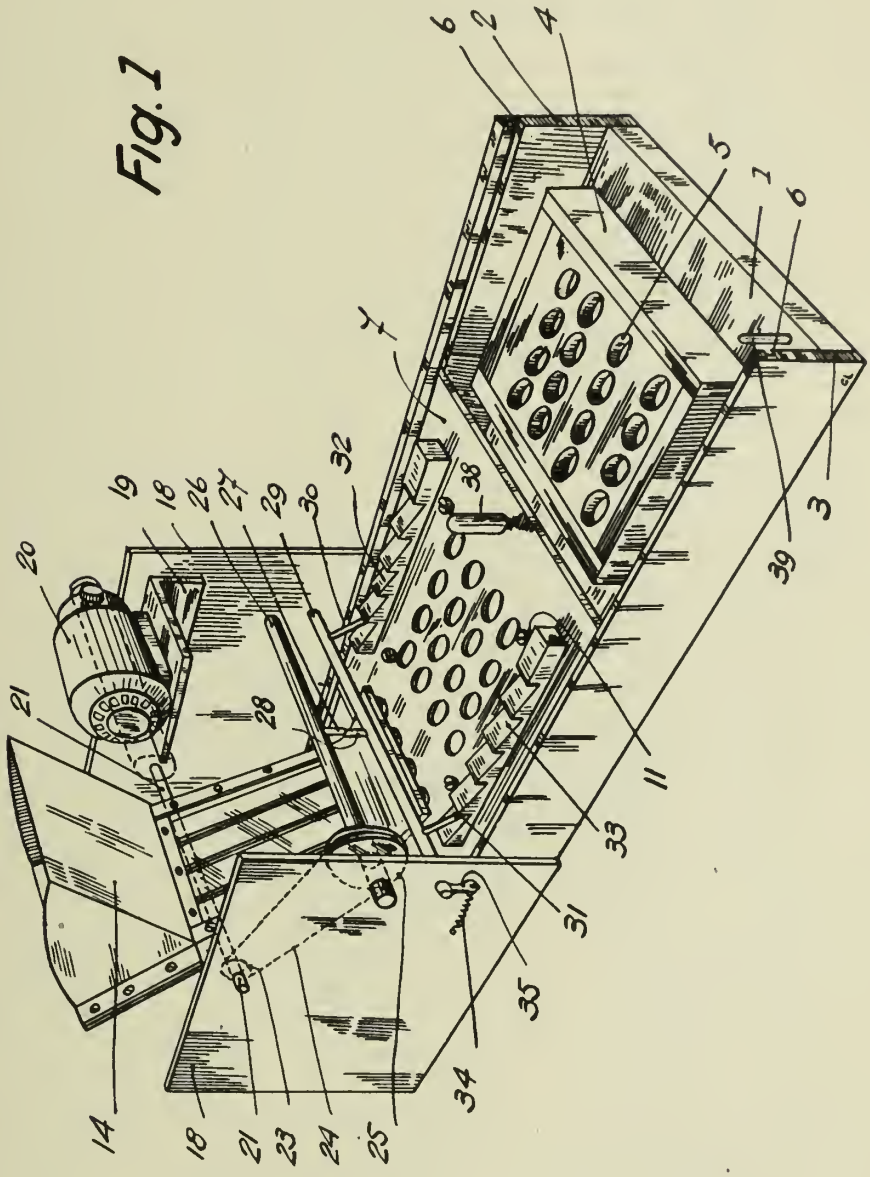

INVENTOR
Charles A. Nicolle
By Watson, Cole, Grindle & Watson
ATTYS

PUBLISHED

MAY 25, 1943.

BY A. P. C.

C. A. NICOLLE

PACKING MACHINE

Filed April 17, 1939

Serial No.

268,442

9 Sheets-Sheet 2

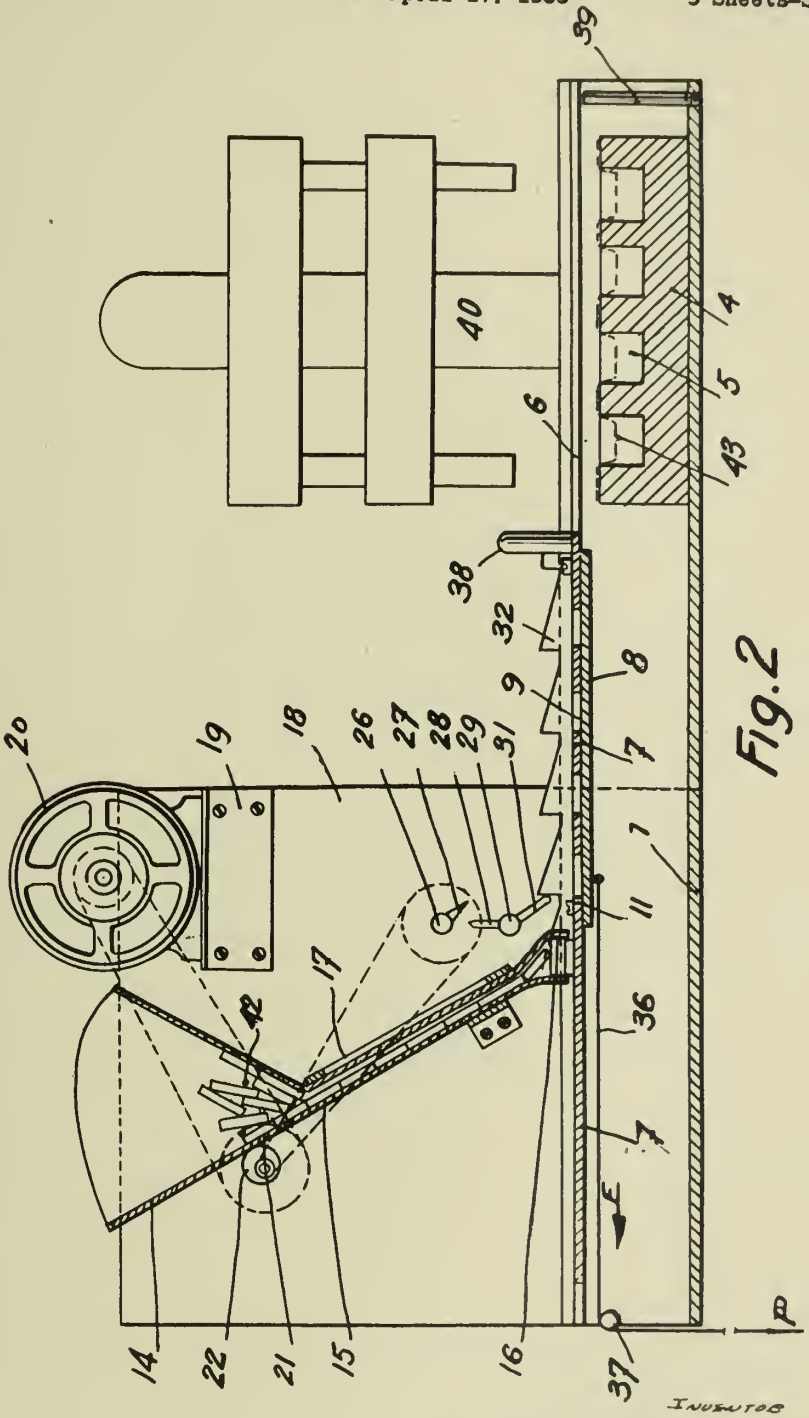

Fig. 2

INVENTOR

Charles A. Nicolle

By Watson, Cole, Grindle & Watson

ATTYS

PUBLISHED
MAY 25, 1943.
BY A. P. C.

C. A. NICOLLE
PACKING MACHINE
Filed April 17, 1939

Serial No.
268,442
9 Sheets-Sheet 3

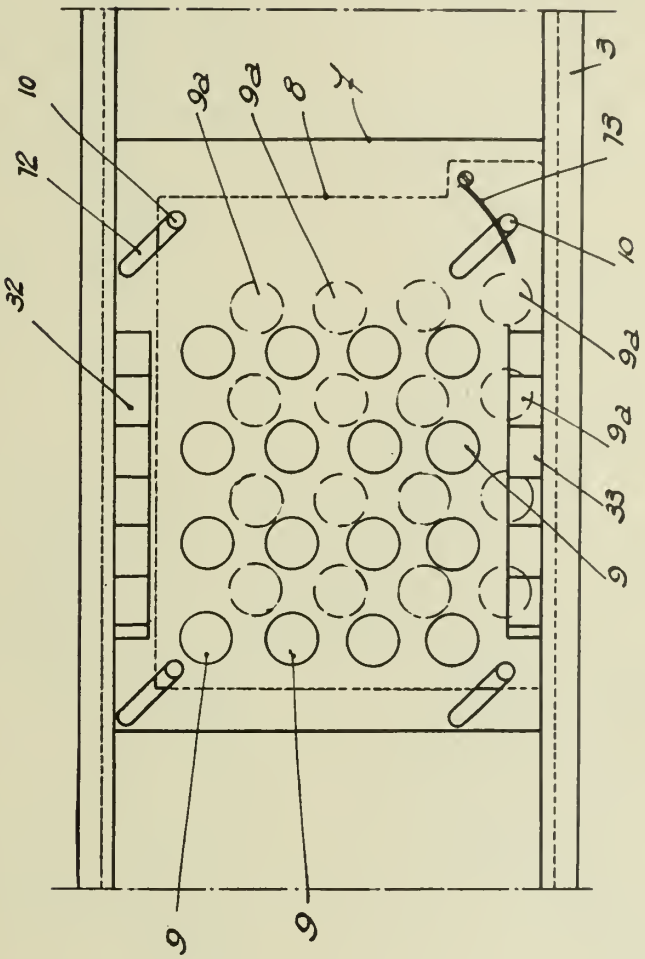

Fig. 3

Inventor
Charles A. Nicolle
By Watson, Cole, Grindle & Watson
Attys

PUBLISHED

MAY 25, 1943.

BY A. P. C.

C. A. NICOLLE

PACKING MACHINE

Filed April 17, 1939

Serial No.

268,442

9 Sheets-Sheet 4

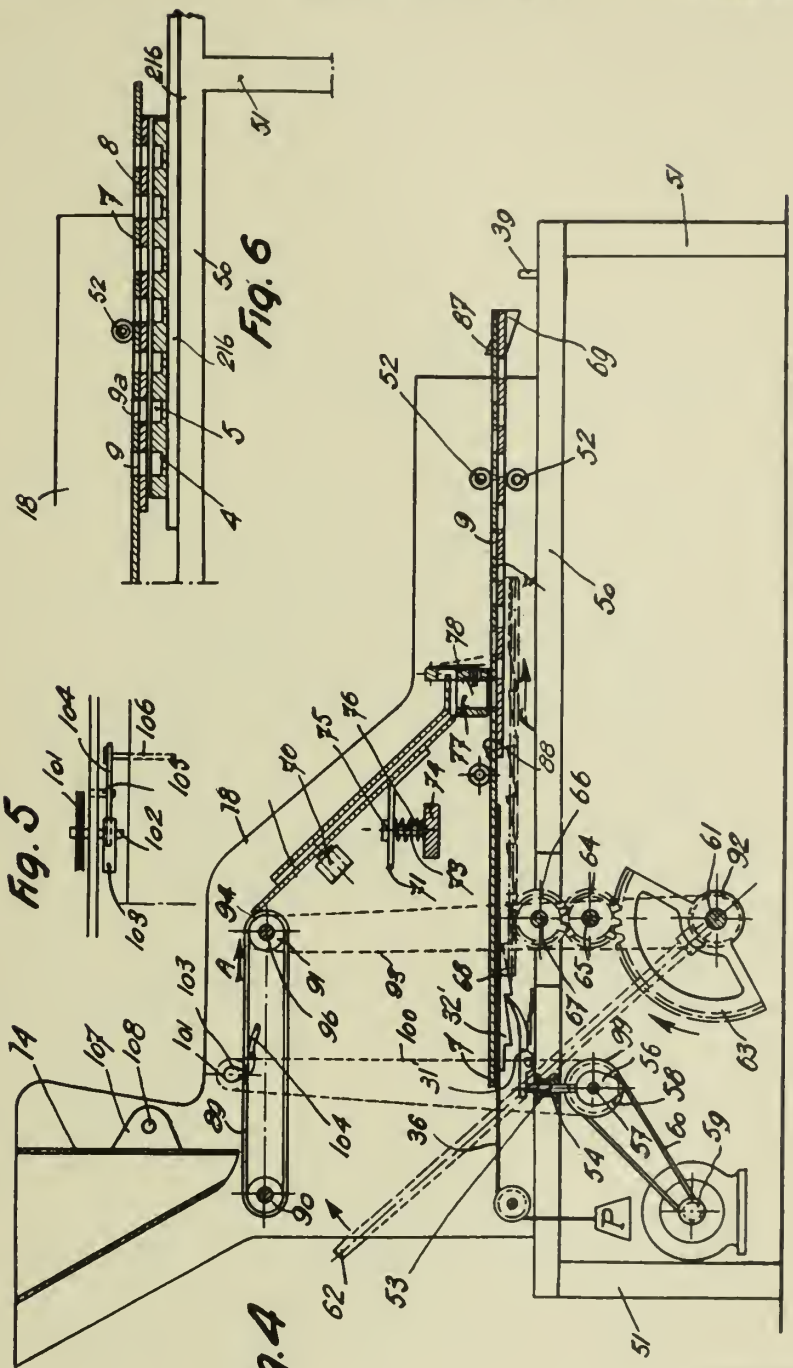

Fig. 6

Fig. 5

Fig. 4

INVENTOR

Charles A. Nicolle

By Watson, Cole, Grindle & Watson

ATTYS

PUBLISHED

MAY 25, 1943.

BY A. P. C.

C. A. NICOLLE

PACKING MACHINE

Filed April 17, 1939

Serial No.

268,442

9 Sheets-Sheet 5

Fig. 7

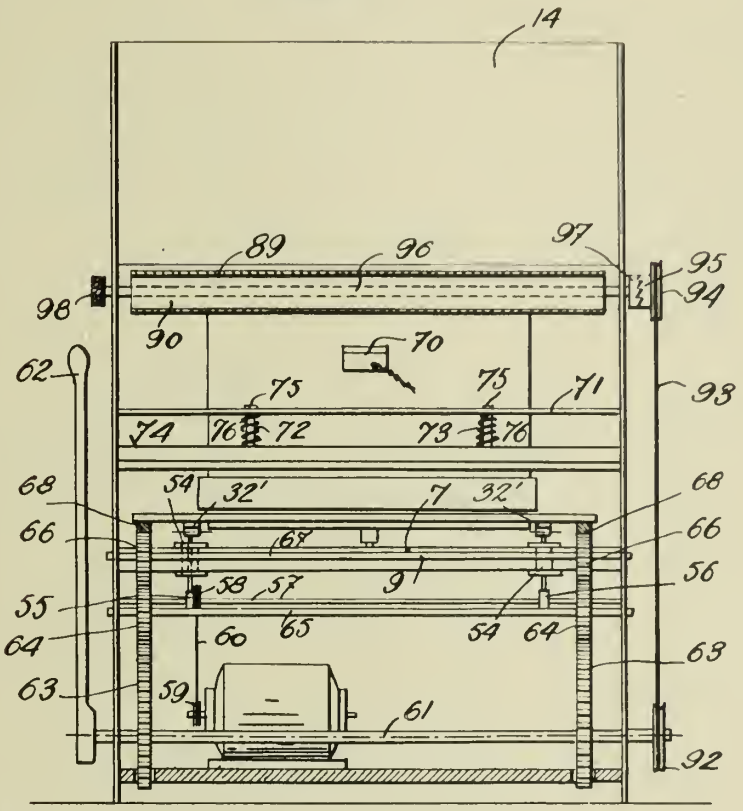

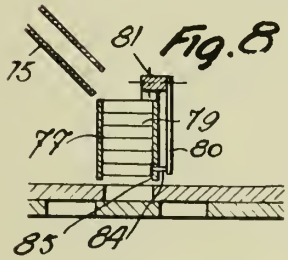

Fig. 8

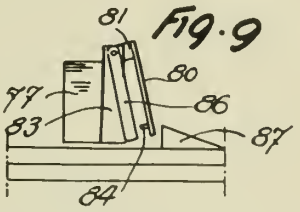

Fig. 9

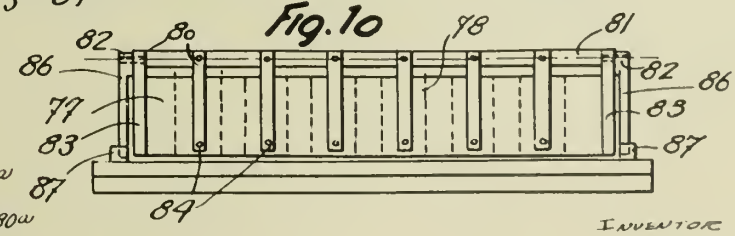

Fig. 10

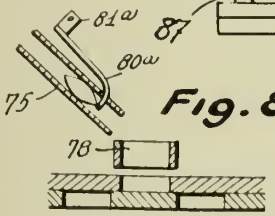

Fig. 8a.

INVENTOR

Charles A. Nicolle

By Watson, Cole, Grindle & Watson

Attys

PUBLISHED
MAY 25, 1943.
BY A. P. C.

C. A. NICOLLE
PACKING MACHINE
Filed April 17, 1939

Serial No.
268,442
9 Sheets-Sheet 6

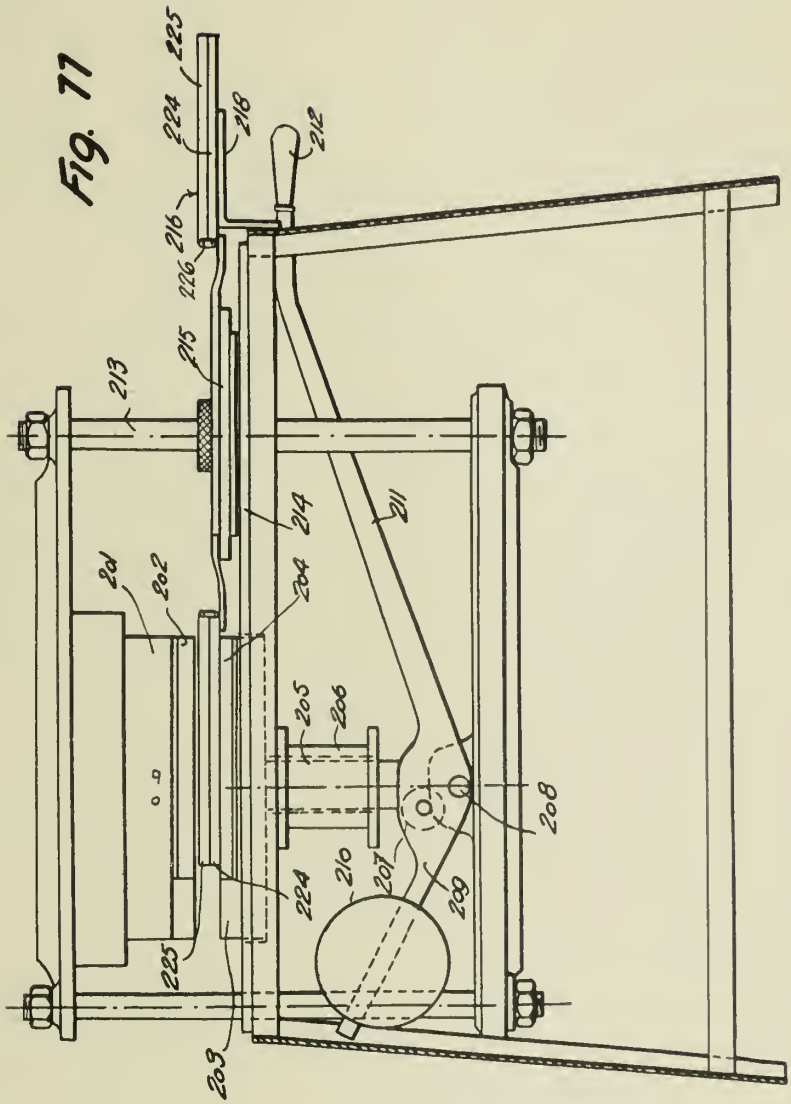

INVENTOR
Charles A. Nicolle
By Watson, Cole, Grindle & Watson
ATTYS

PUBLISHED

MAY 25, 1943.

BY A. P. C.

C. A. NICOLLE

PACKING MACHINE

Filed April 17, 1939

Serial No.

268,442

9 Sheets-Sheet 7

Fig. 12

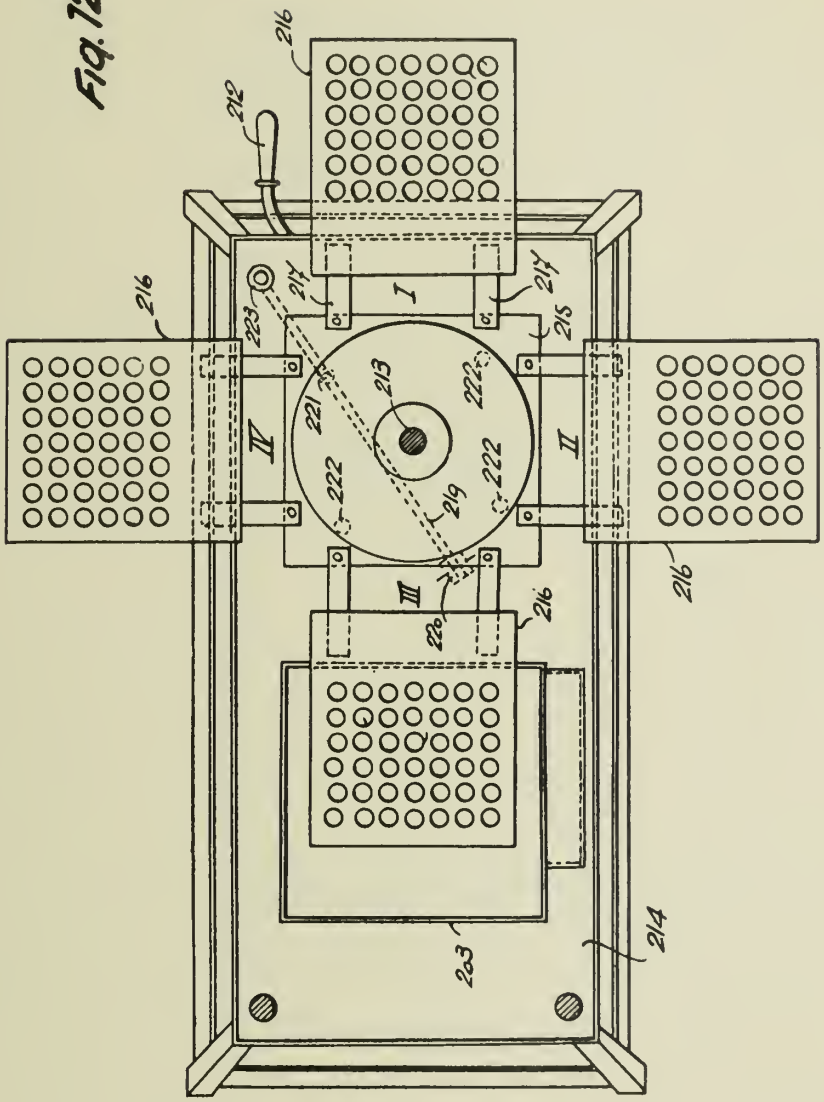

INVENTOR

Charles A. Nicolle

By Watson, Cole, Grindle & Watson

ATTYS

PUBLISHED
MAY 25, 1943.
BY A. P. C.

C. A. NICOLLE
PACKING MACHINE
Filed April 17, 1939

Serial No.
268,442
9 Sheets-Sheet 8

Fig. 13

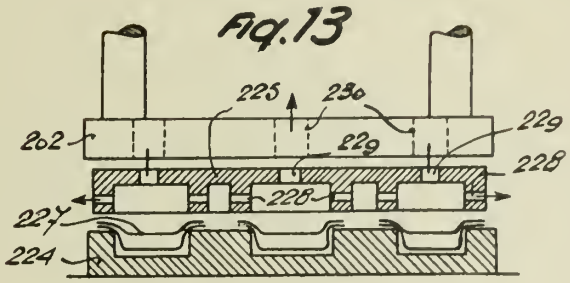

Fig. 14

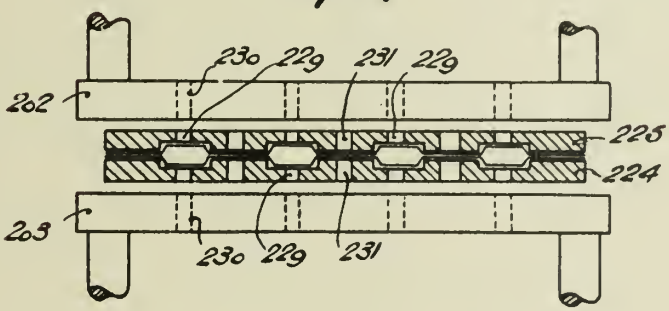

Fig. 15

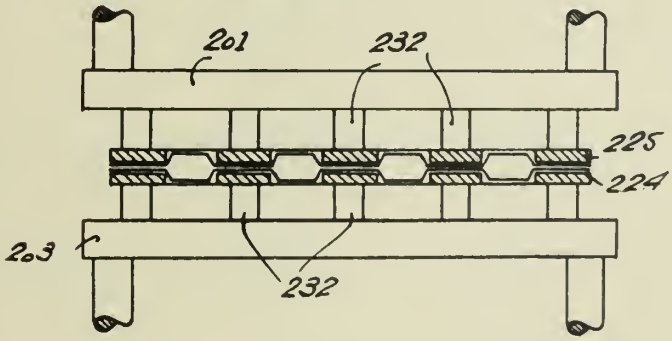

INVENTOR
Charles A. Nicolle
By Watson, Cole, Grindle & Watson
ATTYS

PUBLISHED
MAY 25, 1943.
BY A. P. C.

C. A. NICOLLE
PACKING MACHINE
Filed April 17, 1939

Serial No.
268,442
9 Sheets-Sheet 9

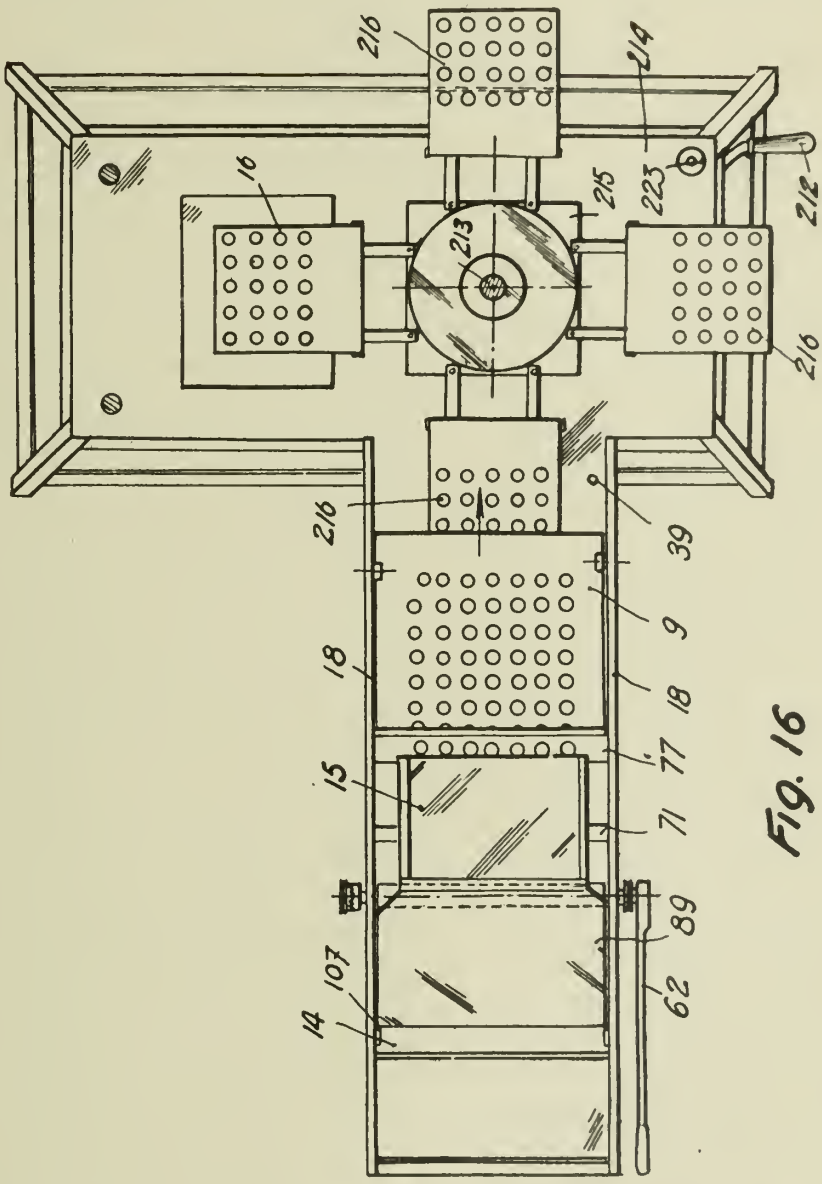

Fig. 16

INVENTOR
Charles A. Nicolle
By Watson, Cole, Grindle & Watson
ATTYS

Published May 25, 1943

Serial No. 268,505

ALIEN PROPERTY CUSTODIAN

HOLLOW ROD CONNECTION

Jakob Keulers, Hilden, Germany; vested in the Alien Property Custodian

Application filed April 18, 1939

The screw connection of hollow rods to form a hollow rod string in deep well drilling, especially with rotary rods, using a special connecting piece is known. This connection consists as shown in Fig. 1 of the accompanying drawing of two connection parts 1 and 2 which, with internal screw threads 3 and 4, are screwed on to the external screw threaded ends of the hollow rods 5 and 6. This screwing is effected for fixing the parts 1 and 2 on the ends of the hollow rods 5 and 6, it being usually not absolutely essential to unscrew these connections. When using the hollow rods in the bore hole, it is, however, very often necessary to unscrew and reconnect the individual hollow rods. This is effected by unscrewing the screw connection 7 between the parts 1 and 2. This screw thread connection is a steep conical thread with coarse thread profile, so that the screwing can be carried out very easily and quickly. The screw thread 7 is not very sensitive to wear and damage. The screw connections 3 and 4, however, are fine threads and consequently can seldom be unscrewed without damaging, especially when the hollow rods are to be used several times for drilling.

When using this hollow rod connection, it has, however, been found that the spigot ends of the hollow rods 5 and 6 frequently strip in the screw threads of the parts 1 and 2. This tearing off is attributed to the following reasons:

Owing to the continuous strong vibration of the rod string during the drilling operation the screw threaded ends of the parts 1 and 2 widen slightly. The result of this is, that the connecting parts 1 and 2 screw further on to the ends of the rods 5 and 6. By the additional stresses thereby produced, favoured by the notch effect of the pointed screw threads 3 and 4, fracture very often occurs in the screw threaded portion of the hollow rods 5 and 6.

The cause of this fracture may, however, consist in many instances solely in the notch effect of the fine threaded pointed thread profile, especially as the durability of the material is very greatly reduced by the corrosion in the windings of the screw thread which are not in engagement. The danger of corrosion is very great owing to the aggressive flushing medium which continually flows along the outer surface of the hollow rod during the boring operation. At the same time, not only the outer surface is attacked by corrosion but a not inconsiderable amount of wear is caused by the continuous action of the flushing current as the flushing medium causes eddy effects within the recesses of the connection parts 1 and 2. The resultant reduction of the thickness of the hollow rod wall reduces the strength of the connection to a considerable extent.

It has been repeatedly endeavoured to avoid these rod fractures by modifying the screw connection, as in deep drilling the rod fractures are an extremely disagreeable phenomenon, which frequently occasions very high expense and not unfrequently results even in the loss of the bore hole.

Thus, for example it has been endeavoured to avoid the overscrewing of the connections by welding the end faces of the connection parts 1 and 2 to the rods 5 and 6. Rod fractures are not, however, prevented by this procedure as the notch effect of the sharp screw thread is always present. Moreover, the welding results in unfavourable changes of structure occurring at and beyond the edges of the weld, and under the constant stress to which the string of hollow rods is subjected to a high degree, notch effects are produced which cause permanent fractures.

It was believed that another solution for the prevention of stripping had been found in the hot shrinking of the connection parts 1 and 2 on the ends of the rods 5 and 6. However, this measure has not been effective as, in spite of the parts being shrunk on, they worked loose during the drilling and moreover the other inconveniencies above described remain.

The object of the invention is, to overcome all these objections of the hollow rod connection and to prevent the stripping of the rod ends.

According to Fig. 2 a shoulder 8 is provided in the thickened end 5 of the hollow rod against which a ring 9 bears. The ring 9 may be fixed on the end 5 of the rod for example by hot shrinking. The end face of the ring 9 serves as bearing surface for the connection part 1, the contacting surfaces coming to bear the one against the other when the connection part 1 is screwed tightly on to the rod end 5. Thus, overscrewing of the connection part 1 on the end 5 of the rod is prevented even when the string of rods is used repeatedly in the bore hole. The end face of ring 9 may be either perpendicular or inclined to the axis of the hollow rod and profiled.

Furthermore, by the connection part 1 bearing tightly against the end face of ring 9 the flushing medium is prevented from coming into contact with the screw thread so that the objectional effects resulting therefrom are eliminated.

To do away with the danger of fracture due to the notch effect of the pointed screw thread in general use to-day, the screw thread is given a

more suitable profile, in that it is constructed for example as a flat, trapezoidal or round thread.

The screw connection is packed by two tapered surfaces 10 provided one on the outer side of the hollow rod and the other on the inner surface of the connection piece. When the two parts are screwed home these surfaces bear so tightly the one against the other that a tight joint is ensured even under maximum pressures.

It has been found advantageous, to make the end of the rod 5 elastic to enable it to yield during the screwing operation. This is effecte groove 11, which forms on the end face c hollow rod a lip 12 which is elastic and yie without the whole end face of the hollo yielding. To effect a yet more intimate co tion between the end 5 of the hollow rod an connection 1 these two parts can be shrunk they are being screwed together, in that the nection part 1 is heated to a suitable tempe before being fitted on the end 5 of the hollo

JAKOB KEULE

PUBLISHED

MAY 25, 1943.

BY A. P. C.

J. KEULERS

HOLLOW ROD CONNECTION

Filed April 18, 1939

Serial No.
268,505

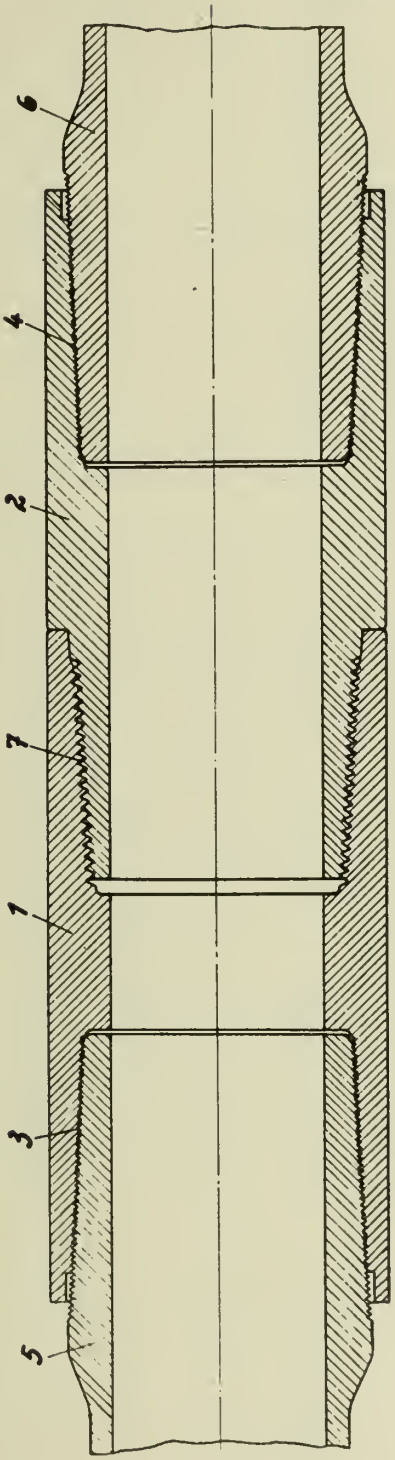

Fig. A

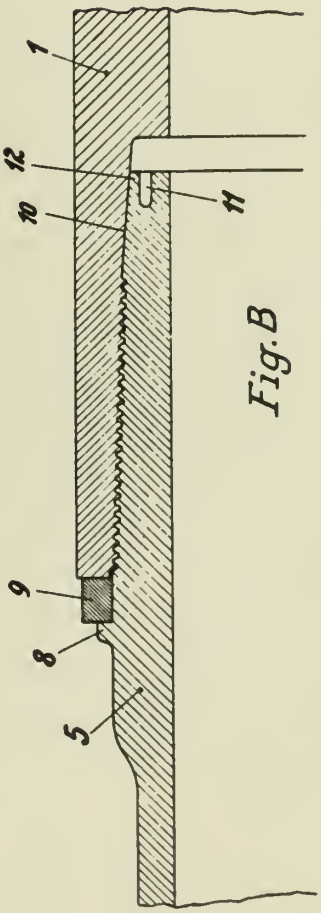

Fig. B

Inventor:
Jacob Keulers
By O. W. Hunt
his Att'y.

Published May 25, 1943

Serial No. 269,063

ALIEN PROPERTY CUSTODIAN

BAG

Adolf Rambold, Dresden A, Germany; vested in the Alien Property Custodian

Application filed April 20, 1939

This invention relates to bags, which may be perforated and utilized as infusion packages, or which may be imperforate and utilized as sales packages.

An object of the invention is to provide a new and improved bag in which a tight seal is obtained by stapling alone without the use of adhesive.

A glueless bag in accordance with the invention comprises a rectangular blank of sheet material folded U-fashion, and with its two coincident edge portions at either side doubly folded upon themselves to form a tight side seam, and staples securing the folds in position.

The advantage of the invention is that the adhesives hitherto utilized for forming bags or infusion packages are avoided, thereby making it possible to form a cheap packing harmless for the contents.

An embodiment of the invention is illustrated on the accompanying drawing.

Figs. 1, 2 and 3 are perspective views showing steps in the making of the bag.

Fig. 4 is an edge view of the bag after completion of the folding step shown in Fig. 3.

Fig. 5 is an edge view of the bag after the bottom corner has been folded up.

Fig. 6 illustrates the upper ends of the bag being brought together (after filling) prior to folding to close the bag.

In the production of the bag a rectangular blank is utilized, which is folded in known manner, namely U-fashion, upon a rectangular core.

The bottom of the bag to be produced is indicated at **1**. Integral parts of the bottom projecting at the two narrow sides are indicated by the reference numerals **2** and **3**, while the portions of the blank which are folded up from the bottom are indicated at **4** and **5**.

The edges of the U-folded blank (Fig. 1) are pressed together at two opposite sides of the core in such manner that from the edges **11** and **12** of said core, wings **13** and **14** extend to the medial plane of the core and then run parallel to the upstanding walls **4** and **5** (Fig. 2). These wings **13** and **14** extending beyond the end of the core are folded upon themselves twice (Fig. 3), whereupon each edge of the bag appears as shown in Fig. 4 presenting the downwardly projecting corner **15**. Finally the corner **15** is folded upwards (Fig. 5), and stapled as shown in Fig. 6.

The upper edges **16** and **17** of the bag thus formed are brought together (after filling) for closing purposes as shown in Fig. 6, and are then folded over twice.

If the bag described, which is preferably made of cellulosic material, is utilized as an infusion package, it may be provided in known manner with perforations adapted to permit entry of the water and "drawing" of the contents.

ADOLF RAMBOLD.

PUBLISHED
MAY 25, 1943.
BY A. P. C.

A. RAMBOLD
BAG
Filed April 20, 1939

Serial No.
269,063

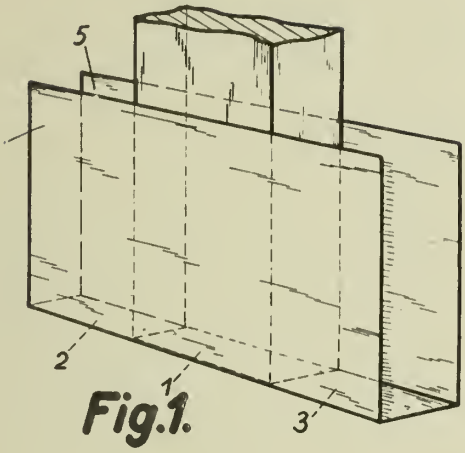

Fig.1.

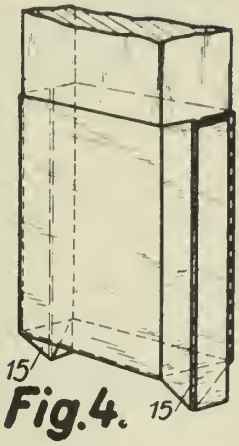

Fig.4.

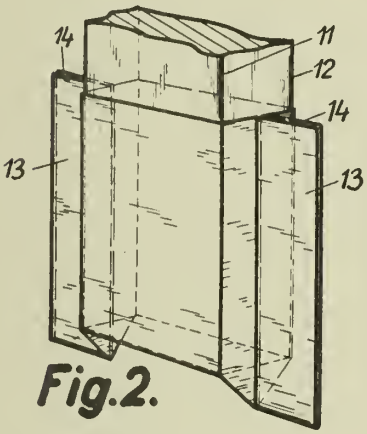

Fig.2.

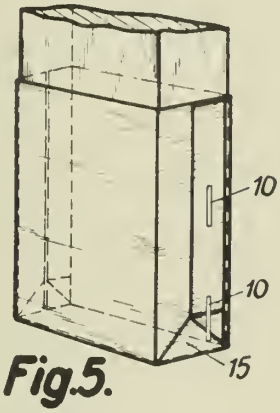

Fig.5.

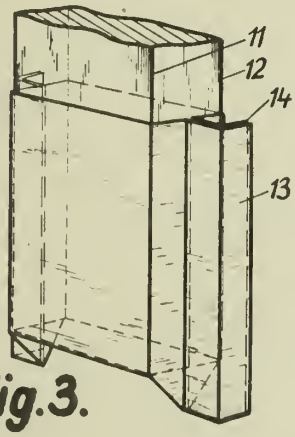

Fig.3.

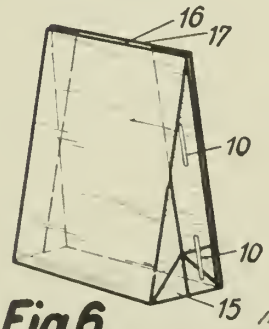

Fig.6.

INVENTOR
ADOLF RAMBOLD,
By John B. Brady
Attorney

Published May 25, 1943

Serial No. 269,265

ALIEN PROPERTY CUSTODIAN

ELECTRICAL CALCULATING APPARATUS

Fritz Mezger, Paris, France; vested in the Alien Property Custodian

Application filed April 21, 1939

This invention relates to electrical calculating apparatus and may be embodied in machines for multiplying or adding two multi-denominational terms together or for summing a series of such terms or a machine for effecting any two or more of such operations so as to evaluate, for example, arithmetical expressions of the form $D \pm AB$ or ΣAB.

The apparatus according to the invention operates in a succession of stages to obtain at each stage a result digit in a normal system of notation and comprises a series of possible groups of circuits, the circuits of each group being adapted to be completed by a source of current and, with the exception of these in the last group, comprising at least one connecting winding controlling at least one contact in a circuit of the succeeding group, in a manner analogous to the links of a chain, the first group of which, corresponding to the introduction of the known quantities, comprises circuits allotted to each of the characteristic digits possible in the different denominations of the terms A, B and D which the operations for which the calculating apparatus is provided may involve, a second group of circuits allotted to each of the partial products to be added and to each of the digits of the term with which they have to be totalised in the case of the operation $D \pm AB$ for the calculation of the result digit in each of the denominations and each dependent on the introduction circuits for the characteristic digits, which furnish the said partial products or which correspond to the digits of the said term, a third group, a bundle for totalisation in said normal system of notation, under the dependence of the sets of connecting windings of the second group, with, in another bundle having a common point with the other, members effecting a different totalisation by using another system of notation, or by neglecting one of the terms to be totalised, for permitting the determination of the transfer by comparison of the ranks of the wires under current at the end opposite to the common point, a fourth group of bundles for the result of the partial totals in said normal system of notation, the circuits of the second group, which correspond to the exploration of the term D being also under the dependence of the circuits of the fourth group for recording the successive totals ΣAB.

In the application of the invention to an apparatus only for adding two terms, the first group therefore comprises circuits each allocated to one of the digits possible in the different denominations of one of the terms, the second group of circuits each comprises a contact controlled by one of said first group and a contact controlled according to the stage of the operation to complete the circuit or circuits pertaining to the digits of the appropriate denomination, and the third group comprises addition switches controlled by the connecting windings of the second group and making cross-connections between an input bundle for the introduction, stage by stage, of the digits of the other term and an output bundle for the results.

Since an addition device forms an essential part of an apparatus for multiplying together two multi-denominational factors by the Arabic method (for adding the partial products and the transfer from one denomination to the next), it follows that such a multiplication apparatus may be derived from an addition apparatus by suitable modification and extension of the circuits without destroying its distinctive character.

A multiplication apparatus according to the invention may thus be regarded as a modification of a basic addition apparatus, and will comprise a first group comprising circuits each allocated to one of the digits possible in the different denominations of the two factors, a second group comprising circuits each comprising a contact controlled by one of the first group pertaining to one of the factors and a contact controlled by one of the first group pertaining to the other factor and terminating at as many sets of connecting windings as there are denominations in one of the factors, each set comprising connecting windings characteristic of the possible units and tens of the partial products involving one denomination of said one of the factors, and the third group comprising addition switches controlled by the connecting windings of the second group and making cross-connections between an input bundle for the introduction of the transfer resulting from the previous stage and an output bundle for the results.

By including in the third group of circuits of the addition apparatus plus and minus switches for effecting alternative connections in the input bundle, the plus switch connecting wires of equal rank and the minus switch connecting wires of complementary rank, it is possible to adapt the apparatus for subtraction as well as addition.

A further addition to or modification of the addition apparatus, permitting the totalisation of a series of multi-denomination terms, comprises the provision of a first group of circuits (additional to or replacing those already mentioned) including contacts controlled by the output bundle of the

third group, and controlling recording relays having contacts in the second group.

The invention will be further described with reference to an example of an apparatus comprising in combination multiplication and addition apparatus having the features already set forth and permitting the evaluation of expressions of any of the forms AB, D±AB and ΣAB, that is to say for effecting a product and the algebraic sum of this product with a known term, which latter may be the result of the algebraic sum of the previously calculated products.

This apparatus possesses with the electrical devices of known calculating apparatus common points which place it in a very special group of such apparatus. These points will first of all be set forth.

An apparatus of this type comprises multiple-contact switches allocated to different numerical values (0 to 9 in the decimal system) which are capable of intervening to effect a partial operation, any one of said switches connecting by its contacts two bundles of wires in an order such that an input wire of given rank is connected to an output wire, the rank of which is determined both by the rank of the input wire and by the numerical value to which said switch is allocated. This mode of connection being effected between an input bundle in the electrical calculating device, whereof the wires may be connected separately to a source of current, and an output bundle of wires, whereof each wire is allocated to one of the numerical values which a given denomination of the result may assume, it follows that when the switches allocated to the numerical values of the different terms intervening in the partial operations relating to this denomination are closed, there corresponds to a predetermined wire under current at the input of the device, a predetermined wire under current at the output, that is to say a wire which is allocated to the numerical value of the digit of this denomination of the result of the operation effected.

In such a device, for effecting the product of two numbers, the operation of multiplication is decomposed in accordance with the Arabic method, according to which all the inter-digital partial products corresponding to a given denomination of the result are effected consecutively, while ascending at each operation from one denomination to the next higher denomination and effecting for each denomination the sum of the calculated partial products, taking into account the carry-over or transfer from the corresponding sum in the preceding denomination.

The inter-digital products of digits of a given denomination may contain units and tens; but only the units appear in the sum of the partial products pertaining to the same denomination of the result, the tens appearing only in the sum of the partial products pertaining to the next higher denomination of the result. Thus, each sum of partial products relating to a particular denomination of the result contains in addition to any possible transfer, both the units of the products of two digits corresponding to that denomination and the tens of the products of two digits corresponding to the preceding lower denomination.

In the electrical calculating device which forms the subject of our prior Patent No. 483,906 and is applicable to the calculation of arithmetical expressions of the general form D±AB, for the calculation of each denomination of the result there is established, by means of a g commutator constituted for example by a cylinder, between the same input bundl the same output bundle, a series of multi-c switch groups which, in said series, are all alternately to the units of the partial pr of the pairs of digits of the same denomi and to the tens of the partial products pairs of digits of the preceding denomin each multi-contact switch being closed o according to whether the numerical va which it is allocated corresponds or not result of the calculation being effected. In tion, for calculating the number which ha carried over or transferred from the sum partial products pertaining to a certain de nation into the sum of the partial product taining to the next denomination, suppl tary wires are provided in the bundles, suc said bundles comprise a number of wires sponding to that of the different possib merical values in an auxiliary notation, f ample, eleven wires for the hendecadal s and there is effected in the device the ac in the decadal system of notation and hendecadal system of notation, the value carry-over which has to be transferred next denomination being deduced from th ference of the units of the sums of the products in these two systems.

In the accompanying drawings, Figures are tables and diagrams relating to th liminary explanation and Figures 4 to 10 in the form of electric wiring diagrams tw amples of calculating apparatus construct cording to the invention. For facilitatin explanation the apparatus shown is designe ly for the calculation of products of fact two digits, and consequently of results o digits at the most, and for the algebraic s such products with a known term of four according to the expressions D±AB and

$$(\pm A_1B_1 \pm A_2B_2 \pm \ . \ . \ . \ \pm A_{n-1}B_{n-1}) \pm A$$

Figures 11 and 12 are timing diagrams re to the two constructions described.

Figure 13 is a front view of a machin bodying the electrical device according invention, the front wall of its casing havin removed.

Figure 14 is a diagrammatic representat the same with the numerical references various electrical members.

Figure 15 is a side elevation of the right side of the casing as shown on Figure 13.

Figure 16 is a partial horizontal section casing alone along line **16—16** of Figure 1

Figure 17 is a vertical section along line of Figure 13, at an enlarged scale.

Figure 18 is a rear view of part of the m at a level corresponding to said section.

Figures 19 and 20 show a detail in ele and section.

Figure 21 is a vertical section along line of Figure 13.

Figure 22 is a rear view of the upper left side part of the machine as shown on Fig

Figure 23 is a section along line **23—23** ure 13.

Figure 24 is a sectional view of an ana device for perforated cards, for controlli introduction of the digits of the factors an of an operation.

Figure 25 shows a detail, at an enlarged in section taken along line **25—25** of Figure

Of Figures 4 to 10:

Figure 4 shows the members for introducing and recording the digits, units and tens of one of the factors (B) and the departure of the "second circuit" bundles of wires ("second link" of the chain).

Figures 5 and 6 represent together the members for introducing and recording the digits of the other factor (A) with the termination of the bundles of the "second link", Figure 5 corresponding to the unit digits of the said factor and Figure 6 to the tens digits.

Figures 7 and 8 represent the bundles and switches for the addition of the partial products in the "third circuit", Figure 7 comprising in addition the members for recording and introducing the transfer.

Figure 9 represents the members for introducing the term D or

$$(\pm A_1B_1 \pm A_2B_2 \pm \ . \ . \ . \ \pm A_{n-1}B_{n-1})$$

and for recording this term and the members and circuits for calculating the algebraic sum D±AB or ΣAB, and also the departure of the "fourth circuit" (results).

Figure 10 represents a modification of the control members and circuits shown in Figures 4 to 9 in the vicinity of the members dependent upon them.

The diagrams shown in Figures 4 to 9, once assembled, constitute the assembly of the electrical device for calculating the operation D±AB or ΣAB in the case in which each of the terms A and B only comprises two denominations, units and tens, and in which the term D to which it is necessary to add algebraically the product AB comprises a number of denominations equal to that of the maximum result of said product, that is to say four denominations, units, tens, hundreds and thousands.

For assembling these diagrams, the diagrams **4**, **5** and **6** must be aligned from right to left so as to cause the wires of the same references of the horizontal bundles of these diagrams to correspond. Figures 7 and 8 are placed respectively below sheets **5** and **6**, causing the vertical wires which enter the former while leaving the second to correspond, and Figure 9 is finally placed on the left of the group of the assembled Figures 6 and 8, the horizontal wires of the bundles leaving on the left of Figures 6 and 8 being made to correspond with those which leave on the right of Figure 9.

In the case of the device comprising the control members according to the modification shown in Figure 10, it is necessary to assemble this figure with Figure 7, replacing the transfer device shown on the right of Figure 7 by the same transfer device shown on the left of Figure 10. In the complete device thus obtained, it is furthermore necessary to omit the control members of Figures 4 to 9 which are duplicated by the modifications of Figure 10.

After a preliminary explanation concerning the number of switches necessary for calculating the products AB, reference will be made first of all to the electrical calculating device, illustrated by the assemblage of Figures 4 to 9, while explaining successively the constitution and operation of the partial devices relating:

To the introduction by the "first circuit" group and the recording in the "second circuit" group of the factors A and B, and to the calculation of the partial products pertaining to successive denominations of the result, the factors whereof are thus recorded (Figures 4 to 6): "Multiplication giving partial products";

To the recording of the partial products in the "third circuit" group by the connecting windings of the second circuit, and to the addition of these partial products to give by successive denominations the result AB and also to the calculation and recording of the transfer pertaining to this sum (Figures 6 and 7): "Addition of partial products";

To the totalisation in the "third circuit" group by successive denominations of the result D±AB or

$$(\pm A_1B_1 \pm A_2B_2 \pm \ . \ . \ . \ \pm A_{n-1}B_{n-1}) \pm A_nB_n$$

of a product AB calculated in the preceding partial devices and of a known term preliminarily introduced and recorded, and to the introduction of the results AB and D±AB or ΣAB in the "fourth circuit" group (Figure 9): "Totalisation";

To the control of the whole of the device (Figures 4 to 9): "Control".

Then, the modification of Figure 10 will be explained.

Finally, reference will be made to Figures 13 to 25 illustrating a machine in accordance with this invention having the circuit arrangement shown on the assemblage of Figures 4 to 9 modified as shown on Figure 10.

Number of switches

As stated in the foregoing, the calculation of the product AB is effected according to the Arabic multiplication, that is to say, the digits of the increasing denominations of the result are calculated successively by the addition of the digits of the same denomination of all the interdigital partial products of the factors A and B. These digits to be added are, for each denomination, in addition to the possible carry-over from the preceding addition, the units of the partial products of the same denomination and the tens of those of the preceding denomination. Their number, apart from the carry-over, is therefore at the most equal to twice the number of digits of one of the factors, and it may be considered as constant by replacing the missing digits by zero. Furthermore, these products are those which appear in the Pythagorean table, and their units are comprised between 0 and 9 and their tens between 0 and 8 ($9 \times 9 = 81$).

It would therefore be necessary, in the "third circuit" group which comprises in series the groups of multiple switches allocated to the possible digits of the partial products, to provide 10 switches in each group of the units and 9 switches in each group of the tens. However, a simplification is possible. In fact, a digit of the units (0 to 9) may be replaced by the sum of two digits selected respectively from the two groups 0, 1 and 0, 2, 4, 6, 8 and a digit of the tens (0 to 8) by the sum of two digits selected respectively from the two groups 0, 1, 2 and 0, 3, 6.

This makes it possible, for the units, to reduce the number of switches to seven, each being allocated to one of the digits of the two groups in series, a switch being closed in each group for any digit (0 to 9) which has to intervene in the addition.

Likewise, the number of switches of the tens may be reduced from nine to six.

This double decomposition of the partial products into units and tens on the one hand and into two groups for the units and two groups for the tens on the other hand, may be repre-

sented by the complementary Pythagorean tables shown in Figure 1, in which the units digit of the result of multiplying one of the digits of the horizontal row (factor b) by one of the digits of the vertical column (factor a) is obtained by adding the numerical values read from the two tables.

On examining any one of these tables, that of the second group of the units for example, it will be seen that the same elementary result digit corresponds to the products of different factors a, b. Therefore, the connecting winding of the "second circuit" controlling the multiple switch allocated to said digit must have current passing through it for each of these products. This would be possible by terminating at this winding as many wires in parallel as the number of times this digit appears in the table, each of said wires comprising two switches allocated to the numerical values of the two factors a and b of these various products, and for the whole of the table it would be necessary to have a hundred wires. However, a simplification is possible.

This simplification is based on the observation that two values a_1 and a_2 of a different from 5 give the same digit when b is even-numbered and different units digits when b is odd-numbered. These values a_1 and a_2 differing from 5 being one even-numbered and the other odd-numbered there has been provided, as will hereinafter appear, in series in the line common to the products $b.a_1$ and $b.a_2$ two switches in parallel, one of which is closed when a is even-numbered and the other when a is odd-numbered and which establish the connection to the correct winding.

By effecting in the preceding tables the grouping of the factors a different from five and by writing side by side the result digits corresponding to a even-numbered and a odd-numbered, we obtain the "Tables II" shown in Figure 2.

It will be seen that the digits to be differentiated according to whether a is even or odd-numbered are:

	First group	Second group
Units	01	04, 48, 82, 26, 60
Tens	01, 02, 10, 12, 20, 21	03, 30, 36, 60, 06

It will also be remarked that these tables comprise identical columns for several values of b, namely, the table of the units, first group, for all the odd-numbered values of b on the one hand, for all the even-numbered values of b on the other hand, in the tens tables, for $b=0$, and $b=1$, in the first group, and for $b=0$, $b=1$, $b=2$, $b=3$ in the second group. This makes it possible to employ the same wire for a number of values of b.

The simplification which has been indicated above and which has been applied in the device which will now be described is obviously only one example of those which are possible. It makes it possible to reduce the multiplication switches to 7 for each denomination of the factor A and the addition switches to 7 for the units of a partial product and to 6 for the tens.

A similar division has been employed in the circuits of the second group for introducing the term D which is assimilable to a product ($D\times1$). The following tables of decomposition into two groups 0, 2, 4, 6, 8 and 0, 1 for the unit spond thereto.

Group 0, 2, 4, 6, 8 Multiplier: 1	Group 0, 1 Multiplier: 1
d	d
0 1 00	0 1 01
2 3 22	2 3 01
4 5 44	4 5 01
6 7 66	6 7 01
8 9 88	8 9 01

A second selection is necessary in the group (0, 1) according as to whether d is odd. As the product $D\times1$ only compris of the units order, there is no tens tab decomposition results in a reduction in t ber of addition switches necessary.

Another method of decomposing the gorean tables could be selected and othe ings in the tables obtained could be effe example for the units a decomposition groups 0, 5 and 0, 1, 2, 3, 4.

It will likewise be recalled that the c calculating device has been shown as for the operations D±AB and ΣAB co factors A and B of two digits. As nume ample, D=6158, A=69, B=48, has been c the operation 6158±69×48=6158±3312.

The multiplication is shown diagramm in Figure 3, in which it will be seen partial product digits are completed to four by zeros in each of the addition sponding to the four denominations of th

Multiplication giving partial produ

The part of the device relating to th lation of the partial products comprise one hand the switches allocated to the (Figure 4, units and tens), and on t hand the switches allocated to the facto ure 5 for the units and Figure 6 for th the latter being connected by the assem wires aub and adb, each comprising fou of wires, namely, b^1u corresponding to units and comprising two wires, one for values of b, which as seen from the T Units, group 0, 1, all correspond to the sult 00, and one for the odd values of similarly all correspond to the same r b^2u corresponding to group 2 units and co ten wires since as seen from Table I group 0, 2, 4, 6, 8 the results are diff each value of b: b^1d corresponding to tens and comprising nine wires since as s the tables the values 0 and 1 of b corre the same results: and b^2d corresponding 2 tens and comprising seven wires since results correspond to the values 0, 1, 2 a

Referring first of all to Figure 4, it wil that there are ten multiple switches per nation; these switches are denoted by t ences $bu(n)$ and $bd(n)$, where n is o digits 0 to 9, and u and d indicate the tens denominations respectively. (Whe this instance, the letter n is in parenth intended to indicate that it is replac alternative specific digits or groups of indicate one member of a group indicat ically by the remainder of the reference switch is under the dependence of a co vice (which for the sake of simplicit pression will be denoted by the name of magnet") $Bu(n)$, $Bd(n)$ having two one of which, the closing winding f is

necting winding of the "first circuit" and is adapted to receive the current of a line L_1, when a punched card analysing device, for example, establishes a connection of the introduction member EB$u(n)$, EB$d(n)$ pertaining to said line with the corresponding contact. The numerical value to which this winding is allocated is recalled in the figure and any member whatsoever can be denoted by its generic reference, in which n is replaced by the said value (for example winding f of the electro-magnet Bd3). The second winding, or opening winding o is connected by a contact o of the corresponding switch to a release current input line 1_4. The direction of the arrow indicating the output of the current of the windings f and o (second pole of a source, the first pole of which is connected to the current input line L_1 or 1_4) recalls the operation of said winding; said arrow for the closing winding is directed towards the switch and for the opening winding in the opposite direction. This switch may be constructed as indicated in specification No. 487,260, that is to say, it may be a switch having two separate positions, an open position and a closed position, the movable member of the switch being controlled in one direction and in the other by two separate windings. Each multiple switch comprises in addition to the contact o, eight contacts connecting respectively to one wire out of each of the eight bundles forming the assemblages *aub*, *adb*, four pairs of wires terminating for each denomination at four contact banks c_1, c_2, c_3, c_4, (for the units of B) and c_5, c_6, c_7, c_8 (for the tens of B). Each bank has four contacts **1**, **2**, **3**, **4** in front of which is adapted to move a movable contact connected to the current line L_2 of the "second circuit" and controlled by an electro-magnet winding C on the known step-by-step principle. The eight banks of contacts pertain to the same step-by-step distributor, referred to as "principal distributor" which forms part of the control members to be described hereinafter. The remaining two stationary contacts of each bank are connected directly to the first wire of one of the eight bundles *aub*, *adb* (wire allocated to $b=0$).

The two assemblages of wires *aub*, *adb*, leaving on the left of Figure 4, enter Figure 5 (Units of A), across which the assemblage *adb* passes without interruption and proceeds to Figure 6 (tens of A).

Referring first of all to Figure 5, it will be seen that there are seven multiple switches $au(n)$, controlled by electromagnets A$u(n)$ having two windings, one of which, the closing winding f, is adapted to receive current from the line L_1 of the "first circuit" through the introduction members EA$u(n)$ ($n=0$ to 9), the other, the opening winding o, is adapted to receive current from a release current line 1_3 through a contact o of the corresponding switch. The switches form two groups in series, one of five switches allocated to groupings of values of a 0 and 5, 2 and 7, 4 and 9, 6 and 1, 8 and 3, the other of two switches allocated to the differentiation of the results of each of these groups, according to whether a is even-numbered (by switch $au0$) or odd (by switch $au1$). The two groups of switches are connected by bundles t^2u, t^1d, t^2d, composed respectively of grouped result digit wires 04, 48, 82, 26, 60 (for the units) 01, 02, 10, 12, 20, 21 and 03, 30, 36, 60, 06 (for the tens). The contacts of the switches $au0$ and $au1$ connect these wires to one of the wires of three bundles of partial result wires corresponding to the groups 0, 2, 4, 6, 8 (for the units) 0, 1, 2 and 0, 3, 6 (for the tens). The bundle b^1u which corresponds to the "first group" of the units terminates directly at the differentiation switches. Furthermore, it only comprises two wires, one for the even-numbered values of b (wire 0) the other for the odd-numbered values of b (wire 1) and, as is shown by Table II, Units, group 0, 1, only the result digits of the odd-numbered values of b have to be differentiated (single wire t^1u connected by a contact of each of the switches $au0$, $au1$ to the wires of the bundle p^1u of partial results of the group 0, 1 (first group of units). The wires of the two units partial product bundles p^1u (0, 1) and p^2u (0, 2, 4, 6, 8) terminate at the closing windings f of electro-magnets having two windings **1**—S$^1u(n)$ ($n=0$ or 1) and **1**—S^{2}u(n) ($n=0$, 2, 4, 6 or 8). These windings f, which control the units switches (shown in Figure 7 in the addition device) are connecting windings of the "second circuit." The second windings o are the opening windings of the same switches. The bundles p^1d (0, 1, 2) and p^2d (0, 3, 6) issue from Figure 5. (They terminate at the closing windings of the tens switches shown in Figure 7). The wires leaving the switches $au0$–5, $au2$–7, . . . corresponding to the grouped result digits which do not require to be differentiated are connected directly to the corresponding wires of the partial product bundles.

Referring to Figure 6, exactly the same device will be found, allocated to the tens of A (in the references u is replaced by d): switches $ad(n)$ ($n=0$–5, 2–7, 4–9, 6–1, 8–3, 0 or 1), controlled by the electro-magnets A$d(n)$, the closing winding f whereof receives current from the line L_1 through the medium of the introduction members EA$d(n)$ ($n=0$ to 9); the wires of the bundles *adb* are connected in the same way, either directly, or by the contacts of the switches and the bundles t^1u, t^2u, t^1d, t^2d, to the wires of the partial product bundles p^1u, p^2u, p^1d, p^2d; the electromagnets **2**—S$^1u(n)$ ($n=0$ or 1) **2**—S$^2u(n)$ ($n=0$, 2, 4, 6 or 8) are allocated to the units; the bundles p^1d and p^2d issue from Figure 6 and terminate at the tens electro-magnets (Figure 8). However, each of the differentiation switches comprises a supplementary contact ψ, the function of which will be indicated in the description of the control device, together with that of the control members shown in the upper left-hand corner of Figure 6.

If the factors B and A had each more than two digits, it would also be necessary to have on the one hand for the factor B an introduction and recording device for each of the other digits of B (hundreds, thousands and so forth) equal to one of those shown in Figure 4 for the units or tens (half of Figure 4), and furthermore for the factor A, an introduction and recording device for each of the other digits of A (hundreds, thousands and so forth) equal to one of those shown in Figures 5 and 6 for the units and the tens, and supplementary assemblages of connection wires *acb*, *amb* . . . each assemblage comprising as many bundles *bu*, *bd*, *bc*, *bm* . . . as the factor B has digits.

The operation of the multiplication device is as follows: The line L_1 being under current (source on the left-hand side of Figure 6), when a punched card having perforations corresponding to the characteristic digits of the factors A and B passes through the analysing device, the analysers enter said perforations (one per characteristic digit), thus establishing the connection between the line L_1 and the wire of the closing

winding f of the recording electro-magnet corresponding to said digit. Thus, in the example chosen, where A is equal to 69, B is equal to 48, analysing of the punched card establishes the connection of the line L_1 with the following windings:

Figure 6 (tens of A=6): winding f of Ad**0** and Ad**6**—**1**.

Figure 5 (units of A=9): winding f of Au**1** and Au**4**—**9**.

Figure 4 (tens of B=4): winding f of Bd**4** (units of B=8): winding f of Bu**8**.

From the energised windings f the current returns to the other pole of the source, thus completing the "first circuit".

The current of the first circuit source passing through the closing windings of the recording electro-magnets, the lines of contacts of switches corresponding to these electro-magnets are closed and remain closed; they will only be re-opened by the passage of current through the opening winding of each of these electro-magnets, which will be produced for the factor B (Figure 4) by the passage of current in the release line l_4, for the factor A (Figures 5 and 6) by the passage of current through the release line l_3. The contact lines remaining closed, the digits introduced are therefore recorded. Due to this fact, the punched card which was employed for the introduction of these digits is no longer necessary and the next card can now come to the analysing position ready for analysing.

The current of the second circuit arrives at the device for calculating the partial products by the line L_2 (Figure 4) from the source L (middle of right-hand side of Figure 8). The principal step-by-step distributor establishes at each operative stage (that is to say for each of the four denominations of the result) the connection between the line L_2 and the contact of the corresponding number (1 for units, 2 for tens, 3 for hundreds and 4 for thousands) of the eight banks of contacts c_1 to c_8. The passage from the contacts of a certain rank to the contacts of the next rank ("advancement") at the end of each operative stage is ensured by the electro-magnet C, the winding of which is put under current at the desired moment by the control device. In the first operative stage (contacts **1**) there is only one partial product digit to calculate (decomposed into two parts), units of the product a_1, b_1, where a_1 and b_1 are the digits of the least denomination of the two factors A and B (see the diagram of the Arabic multiplication, Figure 3), the other three digits of partial products having to be **0**. For this reason, the contacts **1** of all the contact banks other than c_1 and c_2 are connected to the wires **0** of the corresponding bundles. The contacts **1** of these banks of contacts c_1 and c_2 are under current and it will be seen that as the switch bu^8 is closed, the wire **0** of the b^1u and the wire **8** of the bundle b^2u are under current in the assemblage aub which passes to the switches of the units A. In all the other bundles, the wire **0** is under current. Referring to the multiplication scheme it will be seen that there are three digits to tbe calculated in the second operative stage (contact **2** of the contact banks) and that only the bundles b^1d and b^2d should have the wires **0** under current, this taking place by the fact that the contacts **2** of the banks c_7 and c_8 are connected directly to said zero wires.

It will be seen furthermore in the multiplication diagram, that each horizontal line of partial product digits comprises two zeros, and as corresponds to each of these lines two b (first line b^1u and b^2u of aub, second line b b^2d of aub, third line b^1u and b^2u of adb, line b^1d and b^2d of adb) each bank of co comprises two contacts connected to the w of the corresponding bundles (contacts **3** of c_1 and c_2, **1** and **4** of c_3 and c_4 and c_5 a **1** and **2** of c_7 and c_8).

Referring to Figure 5, it will be seen th wire **0** of b^1u being under current in th operative stage, the wire **0** of p^1u is under c and the winding f of **1**—S^1u**0** is energised producing the closure of the corresponding tion switch of the "third circuit". In the b b^2u, the wire **8** is under current and as the s au**4**–**9** is closed (a_1=**9**), the wire **2** of p^2u is current (direct connection without different because b is even-numbered and the windin **1**—S^2u**2** is energised and the correspondin dition switch of the "third circuit" closed. partial product digit (0+2)=2 is the units of 8×9=72. Likewise, the wires **0** of b^1d ar being under current, the wires **0** of p^1d an are under current.

It must be pointed out that a_1 being odd- bered, the differentiation switch au**1** is c The multiplication scheme and the gro tables show, however, that in the second ope stage, the tens digit of the second line fo ample, which corresponds to the bundles aud, is 7. In each of the bundles b^1d and b^2 wire **8** is under current, which through the dium of the switch au**4**–**9**, puts under cu the succeeding wires of group result digits: t^1d, 36 of t^2d (as indicated by the tables) following wires of digits of partial product then put under current through the mediu the switch au**1**: 1 of p^1d and 6 of p^2d (as indi by the tables).

It will likewise be seen that for each oper stage, that is to say for each position of the able contacts of the contact banks of the pr pal step-by-step distributor there is in each c bundles of digits of partial products (Figu and 6) a wire and only one wire which is u current, whereby the corresponding "second cuit" connecting winding is energised.

Addition of partial products

The part of the device relating to the add of digits of partial products, that is to say, t calculation of the digits of the result of the p uct AB, comprises on the one hand the grou switches allocated to the digits (units and t of the partial products relative to the units (Figure 7) and the groups allocated to the tial products relative to the tens of A, the hig order in the constructional example selected (ure 8) on the other hand the "transfer de recording the carry-over from the sum co sponding to one denomination of the result adding it to the sum corresponding to the denomination (Figure 7).

Referring first of all to Figure 7, there wi seen in the upper part the two groups of u switches (grouping 0, 1 on the right, grou 0, 2, 4, 6, 8 on the left) and, in the lower part, two groups of tens switches (grouping 0 1, 2 the right, grouping 0, 3, 6 on the left), alloc to the partial products involving the units o These switches are denoted by the referen $su(n)$ for the units and $sd(n)$ for the tens, n ing the digit of the partial product to whic switch is allocated; a digit in the index posi refers, as previously for the references of

multiplication device, to the "group" of which this switch forms part and the number 1 placed in front of the reference refers to the fact that the switch forms part of the partial addition device corresponding to the denomination 1 (last digit on the right) of the factor A. Each switch is under the dependence of an electro-magnet having two windings, whereof one, the closing winding *f*, is the connecting winding of the "second circuit" and receives current when the digit obtained in the multiplication has for its numerical value that to which the said winding is allocated. This numerical value is shown in the figure. The second winding, or opening winding *o*, is connected by a contact *o* of the switch to a release current input line l_1. The current outputs of these windings are indicated by arrows directed towards the switch for the winding *f* and in the opposite direction for o. The control windings of the units switches 1—$S^1u(n)$ and 1—$S^2u(n)$, as has been seen, are shown in Figure 5, but the connecting wires of the contacts o of said switches connecting them to their windings *o* are denoted by the figures 0, 1 and 0, 2, 4, 6, 8 of the two groups of units. The tens control windings 1—$S^1d(n)$ and 1—$S^2d(n)$ are shown in the lower part of the figure. Each switch also comprises, in addition to the opening contact o, 21 contacts, 10 for the decadal bundle δ, 11 for the hendecadal bundle η, the hendecadal system of notation being selected as the auxiliary system in the constructional example shown. The two bundles δ, η run parallel to one another in the diagram starting from the position f_1. The assemblage of wires formed by these two bundles passes in parallel through all the switches of each of the groups and these successive groups in series: thus starting from the position f_1 the assemblage of wires extends to the right and left and then upwardly in parallel through the switches 1—s^1u0 and 1—s^1u1 of the first group 0, 1 of the units to the position f_2. From this position the assemblage passes downwardly in parallel through the switches 1—$s^2u(n)$ (n=0, 2, 4, 6 or 8) of the second group of the units to the position f_3. From f_3 the assemblage passes downwardly in parallel through the switches 1—$s^1d(n)$ (n=0, 1 or 2) of the first group of the tens to the position f_4. Finally, from f_4 the assemblage passes upwardly in parallel through the switches 1—$s^2d(n)$ (n=0,3 or 6) of the second group of the tens to the position s_1 where it leaves Figure 7 to enter Figure 8.

The bundles δ and η at f_1, at the input of the addition device, have their first wires connected by the bundles *r* and r_1 to the transfer device. The bundle *r* terminating at the first wires of the decadal bundle δ starting from the wire 0 and through which the current from the transfer device enters, comprises three wires in the example shown. It has been seen in fact that the addition of the digits of partial products relating to a certain denomination of the result AB comprises two units digits (0 to 9) and two tens digits (0 to 8, since 9×9=81), one at least of these digits being a zero (see the multiplication scheme). The partial total of a denomination ignoring any carry-over from the preceding denomination, cannot therefore exceed 9+8+9+0=26 and even with this carry-over it cannot have more than two tens. The transfer is therefore on of the digits 0, 1, 2. The bundle r_1, which relates to the hendecadal bundle η, ought then to have five wires, because, as will be explained, the difference of rank between the wires under current in *r* and r_1 is equal to the transfer, at the most equal to 2.

The transfer device comprises two exactly identical halves; each of them comprises three switches (in the example shown where the greatest transfer is 2): 1$r(n)$ for the first half, 2$r(n)$ for the second half (n 0, 1 or 2). Each switch is controlled by an electro-magnet 1R(n) or 2R(n) having two windings, a closing winding *f* and an opening winding *o*. Allocated to each half of the transfer device (in the sense that the energisation of its electro-magnet is controlled thereby) is a supervising relay 1U for the first half, 2U for the second half, which relays comprise three contacts 1, 2, 3 controlling the connection of a current supply line L to the secondary lines which will be indicated hereinafter.

Each switch comprises:

A contact *o*, one terminal of which is connected to the opening winding of the corresponding electro-magnet, the other to an opening line 1*o* or 2*o* according to whether said switch pertains to the first or second half of the transfer device.

A contact *u*, one terminal of which is connected to the line L and the other by the line 1L or 2L to the winding of the supervising relay U of the half of the transfer device of which it forms part.

A contact *r*, one terminal of which is connected to the secondary current line 1L_3 or 2L_3 connected to the line L respectively by the contacts 2, at rest, of the relays 2U and 1U, and the other terminal of which is connected to the wire of the corresponding bundle *r*, that is to say 0 for the switches *r*0, 1 for the switches *r*1 and 2 for the switches *r*2;

Finally, three contacts 0, 1, 2, one terminal of which is connected to the wire of the bundle r_1, the rank of which is equal to its reference increased by the numerical reference of the switch of which it forms part (thus, for the switches r_1, the contact 1 is connected to the wire 2 of the bundle r_1), the other terminal being connected to the closing winding *f* of the switch of the other half of the transfer device which has for its numerical reference the reference of said contact.

In the lower right-hand corner of the figure is again shown the winding C of the electro-magnet for advancing the principal step-by-step distributor, of which, as has been seen, eight banks of contacts c_1 to c_8 serve to distribute the "second circuit" current in the multiplication device. This winding itself receives current from a bank *c* of four contacts 1, 2, 3, 4 corresponding to the four operative stages of the constructional example described. The odd-numbered contacts of said bank are connected to the current line L*i*, which is itself connected to the line L by the contact 1, at rest, of the relay 1U, the contact 2 to the line L*ii*, connected to L by the contact 1 at rest of 2; and the last contact (4) of the bank is connected to a line ω which is normally connected to the line L*ii* as will later be explained. A second bank of contacts c_0 has its contacts 1, 2, 3, 4 connected in a reverse manner to the preceding contacts, odd-numbered contacts to L*ii*, even-numbered contacts to L*i*, and its movable contact connected to the line L_2 which feeds the eight contact banks c_1, c_2 . . . . c_8 (Figure 4) of the multiplication device. A bank of contacts λ has its odd-numbered contacts (1, 3) connected to the contact 3 of 2U and its even-numbered contacts (2, 4) to the contact 3 of 1U, when these relays are energised; its movable contact is on the release line l_1 of the addition device and also supplies the current of the line L to two contact banks o

and l. The contact bank o has its odd-numbered contacts (1, 3) connected to the opening line 1o of the first half of the transfer device and its even-numbered contacts (2, 4) to the opening line 2o of the contacts of the second half of the transfer device. Finally, the bank l comprises three dead contacts and a last contact connected to the release line l_3 of the multiplication device. This contact may likewise be connected to a synchronising member of the analysing device.

Referring to Figure 8, exactly the same addition switch device as in Figure 7 will be found, with the switches which, in this case, are allocated to the digits (units and tens) of the partial products of the digits of B and of the tens of A (2—$su(n)$ and 2—$sd(n)$; these switches are controlled by the windings o and f of the electromagnets 2—$S^1d(n)$ and 2—$S^2d(n)$ for the tens, and 2—$S^1u(n)$ and 2—$S^2u(n)$ for the units (Figure 6), the numerical value to which they correspond being recalled in Figure 8).

The assemblage of wires s_1 formed by the bundles δ and η entering on the right-hand side, after following the path e_1, 2—$s^1u(n)$, f_5, 2—$s^2u(n)$, f_6, 2—$s^1d(n)$, f_7, 2—$s^2d(n)$, leaves at s_2 to enter the lower right-hand corner of Figure 9 where, on the one hand, the wires of the same rank of the two bundles δ and η are connected together, this being possible because the hendecadal bundle has no eleventh wire in the assemblage s_2, said eleventh wire stopping at the second terminals of the corresponding contacts of the last group of switches (2—$s^2d(n)$ in the example shown), and on the other hand these wires each terminate at a relay P(n) (n=0 to 9) of the result AB (lower left-hand corner of Figure 9).

The operation of the addition device is as follows. One of the wires of the bundle r is under current. For example, at the commencement of the operation, the switch 1r0 of the transfer device being closed, because the transfer is 0 (we shall see hereinafter how the closing of this switch is ensured) the wire O of the bundle r is connected to the line L: +, L, contact 2 at rest of 2U, 1L3, contact r of 1r0, wire 0 of r; consequently, the wire 0 of the decadal bundle δ at f_1 is under current. The operation of multiplication having been effected for the first denomination of the result, the connecting windings of the "second circuit" have closed a switch in each group of the addition device, i. e. as has been seen, for the numerical example selected: 1—s^1u0, 1—s^2u0 and 0 switches of all the other groups. The current arriving in the wire 0 of the bundle δ at f_1 passes through all these closed switches in series (with a displacement of two ranks at the switch 1—s^2u2) and, in the bundle δ at s_2 (Figure 8) the wire 2 is under current In Figure 9, as already described, the wires of corresponding rank of the bundle δ and η are connected together, therefore, current enters the wire 2 of the hendecadal bundle η at s_2 and returns through the closed switches to the wire 0 of the bundel r_1 (Figure 7). There is no transfer and the current takes the following path in the transfer device: wire 0 of r_1, contact 0 of 1r0 (closed), winding f of 2r0, which is closed and remains closed, thus recording the transfer to the next denomination.

More generally, it will be seen that, starting from the wire r representing the transfer from the preceding denomination, the circuit passes successively through a series of switches selected by the multiplication device and each representing a partial product. By the passage through each switch the rank of the wire under current is increased by the numerical value allocated to switch, only the units digit of the sum bein tained in each case. Upon arriving at the tion s_2 in Figure 9 the wire under current t fore represents the units digit of the denor tion of the product AB being calculated d the particular stage in progress. Part of the rent then enters and flow through the hende part of the addition device, passing throug same series of switches but in the reverse In each switch a subtraction in the hende system is effected of the digit represented b switch from the digit represented by the wi tering the switch (subtraction in the hende system merely differs from that in the de system in that when a larger digit is to be tracted from a smaller digit, eleven is adde stead of ten to obtain a positive result digit) the time the circuit arrives at the bundle of r_1, it follows therefore, that the rank of the r_1 which is under current corresponds to th ference between the hendecadal sum of the tial products and the decadal sum of the partial products and of the transfer from th ceding denomination. Consequently, the c ence between the digits represented by the r and r_1 under current gives the transfer t next denomination. In the case of the num example under consideration this transfer i in the first stage.

The transfer device comprises two ide halves each comprising separate switches th which current may be supplied to one of the of the group r. In the present example the r comprises three wires, since as already po out the transfer can only be 0, 1 or 2, and are therefore three switches in each half c transfer device. In each stage, after pa through the switch of the transfer device the decadal part of the addition device, pa the current returns through the hendecada to a wire r_1 as already described and then through the same switch of the transfer d this passage in effect subtracting the tra digit so that the wire leaving the switch c sponds in rank to the transfer digit to be in at the beginning of the next stage. The leaving the switch is connected to the c winding of the switch in the other group is allocated to that transfer digit, so tha switch is closed ready to take part in the stage.

In more detail, the operation of the tra device is as follows. In the first operative the movable contacts of the contact banks position 1. Due to the fact that the switc is closed, the relay 1U is energized: +, L, co u of 1r0, winding of 1U, —. The closing c switch 2r0 puts the winding of 2U under cu +, L, contact u of 2r0, winding of 2U, —. relay 2U being energised attracts its arm with the following results:

Contact 1.—Opening: breaking of the co tion L—Lü;

Contact 2.—Opening: breaking of the co tion through switch 1r0 of L— wire o of r;

Contact 3.—Closing: +, L, contact 3 o contact 1 of the bank λ, 1_1, contacts o and tromagnets o of all the addition switche this results in the opening of these switche . . . 1_1, contact 1 of the bank o, 1o, contac 1r(n) (in particular of 1r0), winding o of 1 —; this results in the opening of the closed s of the first half of the transfer device.

The consequence of the opening of the s

$1r0$ is to break at the contact u the energising circuit of 1U, the armature of which is released with the following effects:

Contact 1.—Closing: +, L, contact 1 of 1U at rest; Li, contact 1 of the bank c, winding of the advancement electro-magnet C; this produces advancement by one step (contact 2 of c, line Lii which is not under current).

Then, after the advancement: . . . Li, contact 2 of the bank c_0, L_2, contact banks of the principal step-by-step distributor at the contact 2; this initiates the multiplication for the second denomination of the result AB (Figures 4 to 6) and the closing of the addition switches corresponding to the digits of calculated partial products (Figures 7 and 8).

Contact 2.—Closing: +, L, contact 2 of 1U at rest; contact r of $2r0$ (which is closed), wire 0 of r, addition switches . . . Referring to the multiplication scheme, it will be seen that in the numerical example selected, the digits to be added in the second operative stage are 6, 7, 8, 0, the total of which is 21. The output wire 1 of the decadal bundle δ at s_2 being then under current, it is the same with the input wire of the same rank 1 of the hendecadal bundle η at s_2, and as the hendecadal bundle comprises the same closed switches as the decadal bundle, the rank of the wire under current in the bundle r_1 is equal to 2 (2−0=tens digit of the sum 21); it is therefore the contact 2 of $2r0$ (closed) which receives the current and the winding f of 1R2 is energised; the switch $1r2$ closes, recording the transfer 2 (same number as the reference of the contact through which the transfer current has passed).

Contact 3.—Opening: breaking of the connection L—bank λ.

The following remarks result from the foregoing:

The transfer is recorded alternately in one of the halves of the transfer device and in the other, said recording consisting in the closing of a switch, the numerical reference of which is the value of the transfer;

The closing of a switch recording the transfer causes the energising of the supervising relay of the half of the transfer device of which this switch forms part;

The addition circuit of the next stage comprises the switch thus closed;

The transfer current of the addition circuit of this next stage closes a switch of the other half of the transfer device, thereby energising the other relay;

The energising of this other relay determines the release of the first half of the transfer device;

Conversely, the opening of the first switch causes the armature of the first relay to drop, thereby producing the advancement and the closing of the addition circuit comprising the switch of the new transfer.

The operation of the transfer device thus comprises two phases per operative stage, that is to say per digit of the result.

During the first phase, one of the supervising relays is energised and the "third circuit" closed by the corresponding half of the transfer device, for the addition.

In the second phase, the transfer current produces the energising of the other supervising relay (both relays are then energised, and the transfer is recorded in the half of the transfer device corresponding to said second relay.

This recording results in the release of the first relay, whence release of the first half of the transfer device and of the addition device, advancement, commencement of the first phase of the next stage, closing of the "second circuit," recording of the digits of partial products, addition.

The cycle has thus recommenced by this new operative stage.

It comprises:

In the first phase (one relay energised): multiplication, addition with the transfer recorded, recording of the new transfer.

In the second phase (second relay energised): release of the addition device, clearing the old transfer, advancement.

The preparation of the transfer device for an operation to be effected and the manner in which the principal step-by-step distributor stops at the end of this operation will be described hereinafter, in connection with the control device.

Totalisation

The part of the device which relates to totalisation (Figure 9) comprises on the one hand the switches allocated to the digits of the known term, to which the result of the calculated product AB has to be added algebraically, and on the other hand, the members for introducing and recording the known term D or the result AB which will then act as known term in a fresh totalisation. Figure 9 likewise shows the output of the "fourth circuit" (inscription of the results). Finally, the control members to be described hereinafter are also shown.

From the point of view of the inscription of the results, the device furnishes the term AB and the sum $D \pm AB$ or

$$(\pm A_1B_1 \pm A_2B_2 \pm \ . \ . \ . \ \pm A_{n-1}B_{n-1}) \pm A_nB_n$$

denomination by denomination in both output bundles AB and Σ (at the bottom and on the left of Figure 9) each of 10 wires, 0 to 9, each of which may control an inscription device of any known type (not shown), such as for example, a rotor subjected to the action of two windings at right-angles to one another and receiving currents proportional to the rank of the wire under current relatively to the extreme wires of the bundle of which it forms part and carrying a contact moving in front of fixed segments as described in French specification No. 799,434 of the 13th March, 1935.

The two bundles AB and Σ may be connected respectively to a current line L_4 and $3L_4$, by lines of contacts p and t which are under the dependence of the "connecting windings" of the "third circuit," windings $P(n)$ and $T(n)$ (n=0 to 9) at which terminate the ten wires of the bundles fp and ft of the "product" AB and of the "total" of the algebraic sum calculated. The wires of the bundle fp are connected directly to the wires of the same rank of the bundles of the assemblage s_2 leaving the addition device. The wires of the bundle ft are connected to these same wires through the medium of the totalisation switches.

Totalisation may consist either of an addition or a subtraction. The addition is effected by the same process as for the digits of partial products, that is to say, the device comprises two groups in series of switches in parallel allocated to digits composing two by two the numerical values 0 to 9 which may intervene in the addition. The first group comprises the even-numbered digits 0, 2, 4, 6, 8, represented by the switches $t^1(n)$ (=0–1, 2–3, 4–5, 6–7, 8–9) and the second group the digits

0, 1, represented by the switches $t^2(n)$ $(n=0, 1)$. For subtraction, instead of subtracting the digit y of a certain denomination of the product AB from the digit x of the same denomination of the known term, its complement relatively to 9 $(9-y)$ is added to it. A correct digit is obtained, however, only on condition that 1 is added to the digit of the lowest denomination. We have in fact $x+(9-y)+1=(x-y)+10$, of which result the characteristic digit of this denomination is the same as that of $x-y$. The 1, added once in the lowest denomination, is introduced automatically in the next denomination by the transfer of the extra 10. Thus, in the numerical example selected where AB=3312, to obtain the differencc D−AB there will be added to D:

$$6687+1=(9999-3312)+1=10{,}000-3312$$

To take into account the possible carry-over of 1 to be transferred from one denomination to the next, there has been provided in the second group 0, 1 an additional switch 2 so as to replace the switches 0, 1 by the switches 1, 2 and thus to introduce this transfer 1. To form the complement relatively to 9 of a digit to be subtracted, to which corresponds a wire under current at the output of the addition device, said wire is connected to the wire of complementary rank of the totalisation bundle.

Referring to Figure 9, there will be seen in the lower right-hand part two multi-contact switches marked + and — establishing connections betwen wires of rank complementary to one another of the bundle δ at s_2 and the bundle at f_8. From f_8 the bundle passes in parallel through the group of switches $t^1(n)$ (first group: n=0–1, 2–3, 4–5, 6–7 or 8–9) to f_9, and from f_9 in parallel through the group of switches $t^2(n)$ (second group: n=0, 1 or 2) to the bundle ft. Each switch is dependent upon an electromagnet P, M, $T^1(n)$, $T^2(n)$ having two windings, closing winding f which for $T^1(n)$, $T^2(n)$ is the connecting winding of the second circuit allocated to the digit of the known term which corresponds to its reference, opening winding o which, except for P and M, are connected by a contact of the corresponding switch to the release current arrival line l_1 (common to the addition and totalisation devices).

Above the switches of the second group will be seen two "displacement relays" 0Y and 1Y having two windings 1, 2 and five contacts 1, 0, η m, o. The control winding 1 is connected for 0Y to the wire 1Lp, for 1Y to the wire 1Lm, which the normally open contacts 1, 2 of a "sorting relay" PM can connect respectively to the wires Lp and Lm, to which are respectively connected the winding f of P, the winding o of M and the winding o of P, the winding f of M. The winding 2 (holding winding) is connected in series by the contact m (open at rest) of its own relay and by the contact o (closed at rest) of the other relay, to an auxiliary source of current. The contacts 0 and 1 (open at rest) of the displacement relays have respectively a terminal connected to the closing windings of $T^2$0 and $T^2$1 for 0Y and of $T^2$1 and $T^2$2 for 1Y, the other terminal being connected to the wires le0 and le1. Finally, the contacts η connect the winding of a relay $T\eta$ to two wires terminating at supplementary contacts η of the — switch for 0Y and of the + switch for 1Y. The switches $t^1$8—9 and $t^2$2 each have a supplementary contact ρ, these two contacts ρ being in series between an auxiliary source of current and the winding of a relay $T\rho$. Corresponding to each of the relays T9 . . . $T\rho$ is a contact 9 . . ., 0,ρ, closed at res contacts forming a chain tr and each 1 except the contact ρ, their fixed termina nected to one of the terminals of a con the same rank 9 . . ., 0 of a line pp and of the terminals of a contact of complem rank 0, . . ., 9 of a line pm, said conta ing opened at rest and controlled by the P(n), and being connected by their seco minal to the line 3L$_4$ through the mediu second supplementary contact p or m of or — switches. The fixed terminal of th tact ρ and the movable terminal of the co of the chain of contacts tr are respectivel nected to the lines 1Lp and 1Lm by two c 3, 4, closed at rest, of the sorting relay PM contact ρ comprises a second fixed termin nected to the line 1Lm. The closing wi of the electromagnets $T^1(n)$ are connected wires $le(n)$ (n=0–1, . . ., 8–9) which, w wires $le(n)$ (n=0, 1) are the "second c wires allocated to the digits of the two into which the possible numerical values (of the digits of the known term are decon

Concerning the recording of the know D or $(\pm A_1B_1\pm \ldots \pm A_{n-1}B_{n-1})$, it at once be remarked that Figure 9 sho circuits and members corresponding to all nominations of this term, namely, for th structional example selected, the units u, t d, the hundreds c, the thousands m. In t per part will be seen four rows of memb the introduction of the term D, analogous t of the factors A and B and denoted by the references ED$u(n)$, ED$d(n)$, ED$c(n)$, E aligned in ten columns, above which are r the numerical references 0 to 9 which n rep and the contacts of which may be connecte "first circuit" current line L$_1$, for exam punched card analysers. Below this introd device are four rows of recording relays D$d(n)$, D$c(n)$, D$m(n)$, corresponding to th denominations of D, and two supplementa D$\alpha(n)$, D$\beta(n)$, the function of which wil forth hereinafter (n=0–1, . . ., 8–9, 0 or 1 relays of the same numerical reference of rows of relays are arranged in a column which said reference is marked. Each re two windings 1, 2 controlling two contac at rest, a holding contact o and a contact is a "second circuit" contact connecting rent arrival wire L^1u or L^2u, L^1d, or L^2d, L$^2\beta$ to one of the analysing wires $le(n)$ same numerical reference as itself (. . ., 8–9, 0 or 1). The winding 1 acts b control winding of the armature of the rel holding winding and for this purpose, on terminals is connected on the one hand introduction members of the digits of th denomination to which the relay is allocat on the other hand, through the medium contact o to an auxiliary current line nected to its source by the contact q, cl rest, of a release relay Q, the other termi ing connected to the output wire lo of th responding row. The winding 2 is conne one terminal to the wire lv of the corre ing row, terminating at the winding of (Dd, Dc, Dm, Dα, Dβ, Du) controlling a of the line lo of the next row, and by th terminal to the wire of the same numerica ence as its relay in one or the other of the et^1 and et^2 corresponding to the two groups. bundles terminate at two lines 1t and 2t

contacts (0 to 9), open at rest, each of which is controlled by the relay T(n) of the same rank and connects to the negative pole the wire which has the same reference as itself if it pertains to the contact line 1t, and the wire 0 or the wire 1, according as to whether its reference is an even or odd-numbered digit, if it pertains to the contact line 2t.

On the right of Figure 9, are shown two contact banks c_9 and c_{10} of the "principal step-by-step distributor" controlled by the electromagnet C (also shown in Figures 4 and 7), each comprising four fixed contacts 1, 2, 3, 4. These contacts, for the bank c_9, are connected respectively to the wires L^1u, L^1d, L^1c, L^1m of the group 1 and for the bank c_{10} to the wires L^2u, L^2d, L^2c, L^2m of the group 2 of the recording relays. Their movable contacts are connected respectively to the second circuit current arrival lines 1L_2 and 2L_2. Above these contact banks of the principal step-by-step distributor is shown an auxiliary step-by-step distributor controlled by an electromagnet C_1 the advancement bank e of which has six fixed contacts 1, 2, 3, 4, 5, 6, that is to say, two contacts more than there are denominations in the result. The odd-numbered contacts are connected to the line Li and the even-numbered contacts to the line Lii, with the exception of the last, which is connected to the line Lω (Li, Lii and Lω extend through Figure 8 to Figure 7). The electromagnet C_1 controls the movable contacts of three contact banks e_0, e_1, e_2, of six contacts each. These movable contacts are respectively connected to the "fourth circuit" current arrival line 2L_4 and "second circuit" current arrival lines 3L_2, 4L_2. The contacts u, d, c, m, α, β of the bank e_0 are connected to the different wires lv of the recording relays, while the contacts c, m, α, β, u, d, of the banks e_1 and e_2 are connected respectively to the lines L^1c, L^1m . . . L^1d and L^2c, L^2m . . . L^2d of the same numerical index of the six rows of recording relays.

The wire Lσ terminating at the winding of the sorting relay PM (shown three times at different points of the figure in front of the different contacts it controls) and the wires Lp and Lm terminating at the winding f of the electromagnets P and M enter on the right of Figure 9 leaving Figure 6, where the wires Lp and Lm are connected to the contacts of the introduction members Ep and Em for the signs + and −, and are connected to any source of current (they are here connected to L_1). The wire Lσ may be disconnected from the circuit or connected to either of these wires Lp, Lm directly or through the analysing device due to the switch It having four contacts 0, ±, +, −.

The operation of the totalisation device will now be explained. For studying this operation, we shall consider first of all the recording of the digits of the term D, then the intervention of the term D thus recorded in the calculation of the total D±AB (AB being a product which is being calculated), that is to say, on the one hand the exploration of the successive rows of recording relays, the effect of which is the closing of certain totalisation switches, and on the other hand the passage of the current, arriving through the bundle δ at s_2 through said switches for terminating at the winding of a certain relay T(n) controlling the inscription of the total result. It will be seen on this occasion how, if necessary, the device effects the transfer to the next denomination of the digit carried over from a certain denomination in the case of addition, and in the case of subtraction. It will then be seen how in the case of the operation Σ AB, the calculated total

$$(\pm A_1B_1 \pm \ . \ . \ . \ \pm A_{n-1}B_{n-1})$$

is recorded, then how this recording is explored for totalising with said known term a new product A_nB_n that is calculated.

Recording of the data.—When a punched card having perforations corresponding to the characteristic digits of the term D passes through the analysing device, the analysers establish for each denomination the connection of the line L_1 with the windings 1 of the relays allocated to the numerical value of the digit of that denomination. These windings are energised and are maintained energised due to the closing of the holding contacts o. The corresponding contacts v are therefore closed. Thus, for the numerical example selected D = 6158, there are, for the units, the following circuits in the first group:

+, L_1 EDu8, winding 1 of Du8—9, lo of the row u, contact of Du at rest, Lo, ... −; the armature of Du8—9 is attracted:

Contact o: closure: contact q, l_5, contact o of Du8—9, winding 1 of Du8—9, lo . . . ; the contact v is held closed. The contact of the relay Du remaining in the position of rest, the holding circuit will only open by the breaking of the holding circuit, namely, by the opening of the contact q when the relay Q is energised for the release of all the recording D.

Likewise, in the second group, the contact v of the relay Du0 is closed.

This recording is effected in the same way for all the rows of the relays, that is to say, for all the denominations of the term D.

Exploration of the recording.—Starting with the principal step-by-step distributor in the position 1 (contact 1 of the banks c_9 and c_{10}) the exploration circuits (second circuit) are the following:

+, . . ., 1L_2, contact 1 of c_9, contact v of Du8—9, le8—3, winding f of $T^1$8—9; closing of the switch $t^1$8—9;

+, . . ., 2O_2, contact 1 of c_{10}, contact v of Du0, le9, contact 0 of 0Y or 1Y (it will be seen later that one of these relays is energised), winding f of $T^2$0 or $T^2$1: closing of the corresponding switch.

The totalisation switches being thus closed, they will remain so until the release wire l_1 is under current (after the recording of the transfer resulting from the addition of the digits of partial products by the transfer device).

Intervention of the sign of totalisation.—The signs + and − may likewise be introduced by means of punched cards, and according to the sign, the wire Lm or Lp is put under current at the moment of analysing. It will be supposed first of all that in each case the wire Lσ is likewise under current (± contact of the switch It, Figure 6). That one of the electromagnets M and P whose winding f is under current closes its switch and the current arriving through one of the wires of the bundle δ at s_2 follows the path: . . . s_2 switch − or +, f_8, a switch $t^1(n)$, f_9, a switch $t^2(n)$, f_1, T(n); the armature of the result relay T(n) is attracted and the corresponding contact of the line of contacts t in particular is closed, connecting the line 3L_4 to one of the wires of the bundle Σ. Furthermore simultaneously, the relay P(n) corresponding to the wire under current at s_2 is energised and the contact

of the same rank of the line of contacts p connects the line L_4 to the corresponding wire of the bundle AB. The digits of a certain denomination of the product AB and of the total are transmitted simultaneously to the inscription devices for the results.

Case of addition.—When at the moment of analysing, the wire Lp is under current, the + switch closes and remains closed, and its contact p connects the contact line pp to the current line $3L_4$. The wire Lσ also receiving current, the relay PM is energised, whereby its contacts 1, 2 are closed, thus connecting Lp to 1Lp and Lm to 1Lm, and its contacts 3, 4 are opened. The wire 1Lp being under current, the winding 1 of the 0Y is also. This relay attracts its armature with the following effects;

The contact o in opening breaks the holding circuit of 1Y: +, contact o of 0Y, contact m of 1Y, winding 2 of 1Y, —; neither of the two windings of 1Y being any longer energised, the armature of this relay drops and its contact o closes;

The contact m of 0Y in closing establishes the holding circuit through the contact o of 1Y and winding 2 of 0Y; the armature of this relay will therefore remain attracted as long as the relay 1Y is not energised.

The contact η (the function of which will be seen hereinafter) and the contacts 0, 1 are closed, these two latter connecting the exploration wires $le0$ and $le1$ to the windings f of T^20 and T^21. When analysing is terminated, the current is broken in the wires Lσ and Lp. The armature of the relay PM drops and its contacts 1 and 2 open, breaking the connections of Lp and Lm to 1Lp and 1Lm, and its contacts 3 and 4 close, connecting these two latter wires to the ends of the chain of contacts tr. The + switch remains closed, the displacement relay 0Y remains energised (non-displaced or direct connection of the second circuit in the second group of the known term).

In the numerical example D+AB, 6158+3312, it has been seen that for the units, the exploration wire $lc0$ was under current. The switch t^20 is therefore closed and the current arriving in the wire 2 of the bundle δ at s_2 passes through the switches +, t^18—9, t^20, and the winding of the relay T0 (8+2=10). A carry-over of 1 has therefore to be transferred to the next denomination. For this purpose, it is merely necessary that during the calculation of the digit of this next denomination, the relay 1Y should be energised in place of the relay 0Y, because that adds one unit to the digit of the "second group" of D.

This "displacement" is effected automatically. It is based on the following considerations. Let x be the digit of the actual denomination of D, y the digit of the same denomination of the product AB (bundle fp), z the units digit of their sum (bundle ft). There are two cases to be considered.

First case.—The sum of $x+y$ is less than 10. In this case z is equal to one of or greater than either of the terms of this sum, and in particular equal to or greater than the term y. The closing of the contact of the line pp corresponding to y puts under current the wire arriving at the contact of the same rank of the chain of contacts tr: $3L_4$, contact p of the + switch, ppy, fixed terminal of try. The current cannot pass through the chain of contacts of higher rank because the contact z forms part of this chain and is open. It passes through the chain of contacts of lower rank and arrives at the li through the contact 3, closed at rest, of th PM, and to the closing winding 1 of the re which, as has been seen, is already ene No change is produced.

Second case.—The sum $x+y$ is equal greater than 10. In this case, z which i to $x+y-10$ is smaller than either of the of this sum, particularly the term y. T contact of lower rank than that which r the current from the line of contacts pp in the chain of contacts tr and the current line $3L_4$ passes through the chain of cont higher rank, thus putting the line 1Lm current. The closing winding 1 of the re is energised, which breaks the holding cir 0Y, the armature of which drops and clo holding circuit of 1Y, the armature of wh mains attracted, establishing by its con and 1 the displaced connection $le0$, $le1$ T^22 for the calculation of the digit of th denomination.

It should be remarked that when the transfer (1) which is added to the total digits x and y of a certain denomination, compared with y is in reality $z+1$. As $z=x+$ $z+1=x+y-9$, however, and it may happe $z+1$ is equal to y. This will be the case $x=9$. Despite this, the relay 1Y should b gised. In this case, however, during the ex tion of the digit of this denomination of th D, on the one hand, the exploration wire has been under current and the switch t^1 closed, and on the other hand the expl wire $le1$ has been under current and in quence of the "displacement" which intr the transfer, the switch t^22 is closed: the ing of the relay Tρ has been connected contacts ρ of the two switches to the au source of current. The armature of thi has been attracted and the contact ρ ha nected the corresponding end of the ch contacts tr to the wire 1Lm. It is therefo this wire which receives the current, as is sary for ensuring the transfer to the ne nomination.

Case of subtraction.—It has been seen the case of a subtraction which is effec adding to the successive digits of D the c ments relatively to 9 of those of AB, it is sary in the lowest denomination, theref the commencement of the operation, to to the total of this addition. This is e automatically. At the moment of analysi wires Lσ and Lm are under current. The — is closed and the relay PM is energised putting the wire 1Lm under current by it tact 2. The relay 1Y is energised and esta the displaced connection necessary for ad unit to the total. It will remain energised next stage of operation for which, the rel being inoperative, its winding 1 is conne the contact 9 of the chain tr, only if th $x+(9-y)$ equals or exceeds 10, in this ca comparison employs the contact line pm cuit: $3L_4$, contact m of the — switch, pmy contact of $tr(9-y)$.

Capacity of the calculating device.—The Tη serves for controlling a signalling device operates when the capacity of the calcu device is exceeded. It has been shown t the commencement of the operation, the 0Y is energised in the case of an additio the relay 1Y in the case of a subtraction. operation continues, the relay 1Y is cne

whenever the sum of two digits of a denomination equals or exceeds **10**, that is to say, whenever there is a transfer to the next denomination, whether the digit of the product intervenes by itself (case of addition) or by its complement (case of subtraction). If the capacity of the machine is not to be exceeded, it is necessary that in the last operative stage, there should be no transfer in the case of an addiition and on the contrary that there should be a transfer in the case of subtraction. This is evident in the case of addition. In the case of subtraction, if the product to be deducted exceeds the known term, which would give a negative total, the complement of this product is less than the complement of the known term. It follows that the sum of the known term and of the complement of the product is less than 10,000 and that there is no transfer from the addition of the thousands digits. In the contrary, there is a transfer if the product is less than the known term, the case for which the capacity of the machine is not exceeded. It follows that if the capacity of the machine is exceeded, the relay **1**Y in the case of addition and the relay **0**Y in the case of subtraction is energised at the end of the last operative stage. In the first case (case of addition) the current arriving at the end of this stage into the line *lq* from the line *l***3** (end of operation release, last position of the principal step-by-step distributor bank *l* on right-hand side of Figure 7) energises the relay Tη: . . . l_3, *lq*, $l\eta$, contact η of the + switch, contact η of **1**Y, winding of the relay Tη —. The armature of Tη is attracted and its contact connects the line **3**L$_4$ to the wire U which terminates at the signalling member (not shown). In the case of subtraction, the relay **0**Y being energised if the capacity of the machine is exceeded, the relay Tη receives current by the contacts of the — switch and of the relay **0**Y, which likewise puts under current the wire U of the signalling member.

Recording of the characteristic digits of a previously calculated product AB and exploration of this recording.—This recording is effected when ΣAB is calculated. For such an operation, the auxiliary step-by-step distributor is employed in place of the banks c_9 and c_{10} of the principal step-by-step distributor. It has been shown that each time a wire is under current in the bundle *ft*, the relay T(*n*), corresponding to the result digit to which the wire is allocated, is energised. It then closes the corresponding contacts of the lines of contacts **1***t* and **2***t*. These contacts connect to the negative terminal two wires of the bundles *et*^{1} and *et*^{2}, namely, those whose references correspond to the two digits of the groups (0–1, 2–3, 6–7, 8–9 and 0, 1) into which the digit of the result is decomposed. In the row of recording relays corresponding to the denomination of this digit, two relays are energised. Thus, if we assume that the first product A_1B_1 of the series to be totalised is the product 3312 of the numerical example previously taken, the first operation consists in adding this product to 0000. For this purpose the totalisation switches +, t^1**0** and t^2**0** are closed by means of preparation members forming part of the control device described later. When in the first stage (units denomination) the relay T**2** is energised, the closing of the contacts **2** in the contact lines **1***t* and **2***t* establishes the following circuits:

—, contact **2** of **1***t*, wire **2**, **3** of *ct*^{1} . . . ;
—, contact **2** of **2***t*, wire **0** of *ct*^{2} . . . ;

The choice of the row of recording relays corresponding to the denomination in question is effected by the bank of contacts e_0 of the auxiliary step-by-step distributor. Thus, the movable contact of this bank on *u*, the recording circuits are completed as follows:

. . . wire **2**, **3** of *et*^{1}, winding **2** of D*u***2**—**3**, wire *lv* of the row *u*, contact *u* of e_0, **2**L$_4$, . . . , +;
. . . wire **0** of *et*^{2}, winding **2** of D*u***0**, wire *lv* of row *u*, . . . , +.

The relays D*u***2**—**3** and D*u***0** are closed, recording the digit 2 in the row *u*.

For the exploration, the auxiliary step-by-step distributor intervenes by its bank of contacts e_1, e_2, establishing a connection between the current input lines **3**L$_2$, **4**L$_2$ and one of the wires L^1*u*, L^2*u*, . . . L$^1\beta$, L$^2\beta$ of the six rows of relays of the two groups D*u*(*n*) . . . Dβ(*n*). Thus, for the exploration of the row *u* (fifth contact *u* of the banks e_1 and e_2) the following circuit will be established for the second group (if the recorded digit is 2):

+, . . . , **4**L$_2$, contact *u* of e_2, L^2*u*, contact *v* of D*u***0**, wire *le***0**, . . .

It is therefore possible to record denomination by denomination the digits of the products AB as they are calculated, and to explore denomination by denomination the rows of relays of a recording. The processes of these recordings and explorings are combined in such a manner that each row of relays is alternately explored and records a fresh digit. The digits of all the denominations of the known term have to remain recorded at the same time until they intervene in the calculation of the digits of the successive denominations of the next totalisation, and therefore the recording of a fresh digit can only be effected in the supplementary rows of relays. According to the form of construction shown, two thereof have been provided α and β and the rows *u* . . . β intervene by rotation. In this case, therefore, the references *udcm* no longer serve to distinguish the lines pertaining to particular denominations.

Recording and exploring process.—For examining this process, it will be supposed for example that the movable contacts of the auxiliary step-by-step distributor are at the second position from the top. The following circuits are established:

Contact bank e_0: contact *d*: +, . . . , **2**L$_4$, contact *d* of e_0, wire *lv* of the row *d*, . . . : this wire being under current the row *d* records the digit corresponding to the closed contacts of the lines of contacts **1***t* and **2***t*; furthermore, the winding of the relay D*c* is under current; this relay being energised attracts its armature and is contact in opening breaks the holding circuit of the recording relays of the row *c*, the armatures of which drop. These relays are therefore now released and are thus able to record the digit of the next denomination of the total.

Banks of contacts e_1 and e_2: contacts *m*: + . . . , **3**L$_2$, contact *m* of e_1, L^1*m*, . . . ; and: +, . . . , **4**L$_2$, contact *m* of e_2, L^2*m*, . . . ; whereby exploration of the row *m* is ensured.

Thus, while the row *d* records a digit, the row *e* is released and the row *m* is explored. At the commencement of the calculation ΣAB, when ±A_1B_1 is recorded, the rows *c* to β, which are explored as the digits ±A_1B_1 starting from the lowest order are recorded in the rows *u* to *m* are set to record zero (relay **0**—**1** of group 1 and **0**

of group 2 energised in each row) by the preparation members of the control device described later, so that at each operative stage, the totalisation switches are closed and allow the current to pass. When all the digits of $\pm A_1B_1$ have been recorded, and as the calculation of the digits of A_2B_2 is proceeding, the total $\pm A_1B_1 \pm A_2B_2$ is recorded, the units of this total being recorded in the row α, the tens in the row β, the hundreds in the row u (which had been explored during the recording of the units of the total and released during the recording of the tens . . . etc.

Finally, the recording of the digits of the successive denominations is effected at each operative stage in a row situated after the explored row and separated from it by the released row, this being done according to a closed cycle. The linking together of these successive denominations follows from the fact that the contacts of the banks of contacts of the auxiliary step-by-step distributor are arranged in an endless chain according to any device well known in the art.

Control

The control members of the device are shown in the various Figures 4 to 9 in proximity to those dependent upon them in order to avoid excessive complication. While collected under the same name, they have nevertheless various functions. Some are subjected to an external intervention. These are the preparation and starting members for preparing the calculating device for an operation to be effected and for starting its automatic operation. The others are automatic devices. These are the safety members for producing stoppage in the case of an incident in the operation.

Preparation and starting of the whole of the calculating device.—Referring to Figure 6, there will be seen in the upper left-hand part:

A general reversing switch IG having four contacts **1**, **2**, **3**, **4** and capable of assuming two positions, one Δ on the right corresponding to the case in which the "known term" is D (operation $D \pm AB$), the other Σ on the left, corresponding to the case in which the "known term" is the total of a preceding operation, recorded by the recording relays (operation ΣAB):

In the Δ position, this reversing switch establishes the following connections:

Contact 1.—Dead segment.

Contacts 2 and 3.—Connection of the second circuit current line L_2 to the lines $1L_2$, $2L_2$ feeding the banks c_9, c_{10} of the principal step-by-step distributor.

Contact 4.—Connection to negative of the output wire of the winding of the release relay Q: this relay is then in shunt circuit on the released wire l_3 of the switches of factor A and is energised when the opening current of these switches passes through said wire (contact **4** of the contact bank **1**, Figure 7); its contact q (Figure 9) in opening then breaks the holding current line l_5 of the recording relays, the armatures whereof drop, thus clearing the recording of the term D in all the rows of relays.

In the Σ position, the reversing switch IG establishes the following connections:

Contact 1.—Connection of a "first circuit" source with the line $2L_4$ feeding the bank e_0 of the auxiliary step-by-step distributor, and with a line $1L_4$ feeding a preparation member shown in Figure 9.

Contacts 2 and 3.—Connection of the second circuit current line L_2 to the lines $3L_2$, $4L_2$ feeding the banks e_1, e_2 of the auxiliary step-b distributor.

Contact 4.—Connection to the negative output wire lc of the winding of the ad ment electro-magnet C_1 of said auxiliar by-step distributor.

A switch I*b* which, in one position, c the release wires l_4, l_3 in such a mann the opening current for the switches of the A produces the opening of those of the fa and, in the other, connects the release wi B to a wire l_6 which is only under current the "preparation."

A switch I*d* which in one position c negative to the output wire l_q of the win the release relay Q (D variable at each tion) and the contact of which, in the position is on a dead segment (D constan number of operations).

The sign switch I*t* which, as has been in the position 0, disconnects the wire which allows said wire to be connected analysing device to either of the wires *lm* in the ± position and connects the to the wire L*p* or L*m* in the + or — po It is thus possible, in a sequence of produ to totalise all the terms, whether they + sign or a — sign, or to totalise only th having one or the other of these signs. been seen, in fact, that the said wire Lσ nates at the winding of the sorting rel and that this relay should be energised selection of the displacement relay 0Y or propriate to the operation to be effected sorting relay PM comprises in addition tact *g* which, as will be seen, controls t ting into circuit of the auxiliary step- distributor each time the wire Lσ is und rent, that is to say, each time the term calculated has a sign such that this term be totalised. If this is not the case, the au step-by-step distributor remains out of and the totalisation switches which hav opened by the current of the release wir main open, breaking the connection of th circuit terminating at the totalisation rela

A bipolar switch provided with a prep button Io connecting the windings of a r and a relay J to an auxiliary source.

The relay K or preparation relay is l shown in Figures 8 and 9 with preparatio tacts for the transfer device and totalisat vice. In Figure 6 there has been shown o of these contacts *k*, holding contact closing the relay K is energised, a holding circui prising the contact *j*, closed at rest, of th J which is a delayed release relay. The w of the relay K may likewise be connected other auxiliary current source by the con of the switches *ad*0 and *ad*1.

The operation of the preparation relay follows. When the preparation button Io pressed, the relays K and J are energised. T lay K attracts its armature (its contacts a in the preparation position), the holding c *k* is closed, but the contact *j* opens and th ing circuit K remains interrupted. Con when the preparation button Io is releas contact *k* opens but the contact *j* only clos delay so that the holding circuit of the r is open at *k* before being closed at *j*. W the course of the operation of the calc device, the two switches *ad*0 and *ad*1 are cl the same time (which in the case of con punched cards may occur if there is no long

card passing below the analysers, for example when the card magazine is empty), the winding of the relay K is put under current through the medium of the contacts ψ. Its armature is attracted to the preparation position and held by the holding circuit, closed by the contact j at rest, until the button Io is depressed. Obviously, the contacts ψ could be provided on other switches which are not to be closed at the same time and an equivalent safety device would be obtained.

Preparation and starting of the transfer device. Referring to Figure 8, there will be seen the relay K, its contact k and its contacts 1, 2, 3, 4 relative to the preparation of the transfer device and connected respectively to the wires Lii, Li, Lu, 0Lo. At rest, these contacts establish the following connections:

Contact 1 connects Lii to Lω.

Contacts 2 and 3 are on dead segments.

Contact 4 connects to negative the wire 0Lo (output of the winding o of the electro-magnet 1RO of the transfer device). When the armature of the relay K is attracted (preparation):

Contact 1 connects Lii to 1Lo (wire connected to the release wire 1o of the first half of the transfer device).

Contacts 2 and 3 put under current the lines Li and Lu (Lu is connected to the winding f of the electro-magnet 1RO of the transfer device).

Contact 4 breaks the connection of wire 0Lo to negative.

Referring to Figure 7, it will be seen that, the line Li being under current, the odd-numbered contacts of the advancement bank c receive current. If therefore the movable contact of this bank is on an odd-numbered contact, advancement to the next even-numbered contact takes place. On the other hand, the line Lu being under current, the closing winding of the electromagnet of the switch 1r0 is energised and this switch closes, because the circuit of the corresponding opening winding is broken at the contact 4 of the relay K. This switch, in closing connects by its contact u the line L to the winding of the relay 1U. The armature of this relay is attracted and by its contact 3, which closes, the release current arrives at the even-numbered contacts of the bank λ, thereby determining through the medium of the bank o the passage of the release current through all the opening windings of the second half of the transfer device. If the relay 2U was under current, because one of the switches of this second half of the transfer device was closed, this current is then interrupted and the armature of the relay 2U drops. Closing of the contact 1 of this relay follows and the current arrives at the line Lii, that is to say, at the even-numbered contact 2 of the advancement bank c. It follows that the principal step-by-step distributor moves with a continuous movement. However, it stops at the last contact (4) of the advancement bank, because the connection of the line Lii to the line Lω is interrupted at the contact 1 of the relay K. It should be remarked that as the first half of the transfer device also receives the release current, due to the connection by the contact 1 of the relay K of the line Lii to the line 1Lo, all the switches 1r(n) except 1r0 open, even if the contact bank being in its last position at the commencement of the preparation, the wire 1o cannot receive the current of the contact bank c. Thus, at all events, at the last position the step-by-step distributor is stopped and the switch 1r0 alone is closed. Furthermore, the release wire l_1 is under current, likewise the release wire l_3 (last contact of the bank l), which effects at the same time as the opening of the addition switches, the opening of the switches of the factor A, the opening of the switches B being effected due to the connection of the wire l_4 to the wire l_3 if the release switch 1b (Figure 6) connects l_3 to l_4. (If the switch 1b connects l_4 to l_6, the release of B is effected, as will be seen hereinafter, as soon as the preparation button Io is depressed which puts the wire l_6 under current.) When a synchronising member is provided for synchronising the analysing device, this member receives current when the principal step-by-step distributor has arrived in its last position. From that moment, the analysing device is ready to effect analysing and may be held stopped in this position.

When the preparation button Io is released and the armature of the relay K drops, its contacts 2 and 3, in opening, interrupt the current in the lines Li and Lu, the effect of which is to interrupt the current at the odd-numbered contacts of the advancement bank c and in the closing winding of the electro-magnet 1R0. The circuit of the opening winding of this electro-magnet is no longer interrupted by the contact 4 of the relay K, but the opening current cannot pass because the movable contact of the bank c is on an odd-numbered contact. The line Lii is still under current through the medium of the contact 1 of the relay 2U at rest, and as the contact 1 of the relay K now establishes the connection between the line Lii and the line Lω, the last contact (4) of the advancement bank c receives current and the principal step-by-step distributor advances by one step and comes to the position 1 (because the contacts of the banks form an endless chain). The opening circuit of the switch 1r0, however, remains open at the contact 1 of the relay 2U and this switch remains closed. The contact 1 of the bank c_0 connects the line Lii to the first circuit current line L_2 and the operation commences as soon as the introduction of the factors is produced (by analysing a punched card). It has been seen in fact (operation of the transfer device) that at this moment the multiplication device calculates the digits of the partial products of the first denomination, that the corresponding addition switches are closed and that current is sent into the wire 0 of the bundle r, connected to the line 1L_3 by the contact r of 1r0, the line 1L_3 being connected to the line L by the contact 2, at rest, of the supervising relay 2U. It has likewise been seen that after the starting calculation proceeds automatically.

Preparation and starting of the totalisation device. Referring to Figure 9, there will be seen the relay K, its contact k, and its contacts 5, 6, 7 and 8, 9, 10 relating to the preparation of the totalisation device, and connected respectively to the wires Lo, Lv, 1L_4 (7 and 8), a source of current, and the wire 3L_4. At rest, these contacts establish the following connections:

Contacts 5 and 6 connect the common wires Lo and Lv to negative.

Contacts 7 and 8 are on dead segments.

Contact 9 connects the source of current to the "fourth circuit" current line L_4.

Contact 10 closes the line 3L_4.

When the armature of the relay K is attracted (preparation):

Contacts 5 and 6 break the connection of the wires Lo and Lv to negative.

Contacts 7 and 8 connect the line 1L4 respectively to line L*i* and to line 0L4.

Contact 9 connects the source of current to the wire l_6 for the final release of the factor B (release switch I*b* (Figure 9) connecting l_4 to l_6 and not to l_3).

Contact 10 breaks the line 3L4.

It will be seen hereinafter what occurs when the button I*o* is depressed (preparation) and then released (starting).

Below the relay K is shown a preparation switch γ which serves for recording 0 in the four rows of recording relays c . . . β for starting the calculation ΣAB, and which is under the dependence of an electro-magnet Γ having two windings, a closing winding *f* connected to the line 0L4 and an opening winding o connected to one of the terminals of the first contact 1 of the switch γ, the other terminal whereof is connected to the line L4. When the switch γ is closed, the contacts 2 and 3 connect the wires 0 of the bundles et^1 and et^2 to negative. The contacts β, α, m, c then connect to 0L4 the wires *lv* of four rows of recording relays β, α, m, c. The last contact o connects the common wire Lo to negative.

On the right of Figure 9, the summation relay H will be seen between the electro-magnets C and C_1 of the two step-by-step distributors. This relay comprises two windings 1, 2 and four contacts *h*, 1, 2, 3. The winding 1 is connected on the one hand to *lq*, that is to say to l_3, and on the other hand directly to negative. The winding 2 on the contrary is connected to the negative through the medium of the contact *g* of the sorting relay PM, and connected to a source of current by the contact *h* of its own armature when the relay H is energised. This contact connects to the source the line 3L4 when it is at rest. Likewise at rest, the contacts 1, 2 and 3 close the lines 4L2, L*i*, 3L2. They are each on a dead segment when the relay H is energised.

In regard to the operation, there are two cases to consider.

Case of the operation D±AB. The general reversing switch IG is in the Δ position. The line 1L4 is therefore not under current, but the line 3L4 is connected to the "fourth circuit" source by the contact *h* at rest of the relay H and the movable contacts of the banks c_9 and c_{10} of the principal step-by-step distributor are connected to the "second circuit" current line L2.

When the preparation button is depressed and the relay K is consequently energised, the movable contacts of the banks c_9 and c_{10} advance to the last position (4), being actuated by the electro-magnet C of the principal step-by-step distributor, which as has been seen, is under current until this position is attained (the circuit of the winding of the electro-magnet C_1 is broken at the contact 4 of the general reversing switch IG). The holding circuits of the recording relays are broken at the contact 5 of the relay K. Furthermore, when the principal step-by-step distributor has arrived at its last position, these holding circuits are also broken at the contact *q* of the relay Q which is then energised, and the armatures of all these relays being at rest, the "second circuit" is broken by their contacts *v*. Likewise the "fourth circuit" is broken at the contacts 9 and 10 of the relay K. On the contrary, the wire l_6 is under current, resulting in the opening of the switches of the factor B if the release wire l_4 is connected to the wire l_6 by the switch I*b*. It will thus be seen, considering the release produced by the transfer device, that the entire calculating device is in the release position and that t principal circuits are open.

The principal step-by-step distributor w advance to the position 1 at the moment o ing, when the armature of the relay K puting the line Lω under current. At th time, the wire Lo of the holding circuits recording relays will be connected to nega also will be the "first circuit" output wir the three rows of relays m, α, β. The fou cuit is again closed. The device will be r operate and as soon as analysing commenc culation will also commence.

Case of the operation Σ AB. It has be that in this case, the general reversing sw (Σ position) connects the lines 1L4 and 2 hence the movable contact of the bank c auxiliary step-by-step distributor to a so current, and those of the banks c_1 and c second circuit current line L2*l* the outpu the winding of the electro-magnet C_1 of th by-step distributor being connected to n (The electro-magnet of the principal s step distributor is obviously not out of circ as its banks c_9 and c_{10} are not connected line L2, they do not receive current.) It be remarked that as the connection of th ing of the relay Q to negative is broken, th cannot be energised.

When the preparation button is depres the relay K is consequently energised, t numbered contacts of the advancement of the auxiliary step-by-step distributor current even if the relay H has remaine gised, because the line L*i* is connected to 1L4. The even-numbered contacts, exc last, are also under current, because they a nected to the line L*ii* which, as has been under current during the preparation. T iliary step-by-step distributor therefore a to its last position (contact 6) and stop because the line Lω is not under current.

The attraction of the armature of the by closing the contacts 7 and 8, puts the ary line 0L4 under current; the closing *f* of the electro-magnet Γ is energised switch γ closes, connecting to negative contacts c, m, α, β the wires *lv* of the la rows of relays (the connection to negative common wire L*v* of the wires *lv* of the la rows is cut at the contact 6 of the relay by its contact o the common wire Lo, t nection of which to negative has been inte by the contact 5 of the relay K. Howeve breaking at the contact 5 is produced w closing of the switch γ, the recording rela been released before the output wires windings 1 are re-connected to negativ and 0L4 being under the current, the wir the last four rows are under current, following circuits are established, for e for the relays of the group 1 of the + . . . , 1L4, contact 8 of the relay K, 0 tact α of γ wire *lv* of the row α, windi DαO—1, wire O.*l* of et^1 contact 2 of γ, —.

The four rows c, m α, β record 0.

When the armature of the relay K drops ing), the fourth circuit is closed at the co The line L4 being under current, the winding *q* of the electro-magnet Γ receiv rent through the medium of contact 1 switch γ. The latter opens, breaking t nection to negative by the switch γ of t Lo and the connection of the last four

the wire $0L_4$. The connection of the wire Lo to negative is re-established at the contact **5** of the relay K, the windings D*a*, D*α* and DS to negative at the contact **6** of the relay K. The wires L*v* of the remaining rows are already connected to negative through the windings D*u*, D*d* and D*c*. At the same time, the fourth circuit is likewise reestablished at the contact 10^1 of this relay. Furthermore, the line L*ω* as has been seen being under current, the auxiliary step-by-step distributor advances by one step to the position **1**, and as soon as analysing commences, calculation commences. It should be remarked that if the sign switch I*t* is at the position **0**, or if no sign is introduced during analysing, the wire L*σ* and hence the sorting relay PM does not receive current and the summation relay H, which is energized by the release current, arriving at the wire *lq* through the release wire l_3, remains energised (holding circuit closed: +, *h*, winding **2** of H, *g*, −), the auxiliary step-by-step distributor does not then receive current and remains in position **1**, since the line L*i* is broken at the contact **2** of the relay H and is no longer connected to the line $1L_4$ under current by the contact **7** of the relay K.

Safety members.—It has been seen that when the two multiplication switches *ad***0** and *ad***1** are closed at the same time, the relay K is energised and remains so until the preparation button Ic is depressed.

The summation relay H also functions as a safety member. In fact, when during the calculation ΣAB, the first term $\pm A_1B_1$ has been calculated (and recorded if necessary), the principal step-by-step distributor arriving at its last contact produces, as has been seen, the release of the factor A (or of the factors A and B) putting the release wire l_3 under current (contact **4** of the bank *l*, Figure 7); the relay H is energised disconnecting the auxiliary step-by-step distributor. If the next term A_2B_2 has a sign for which the sorting relay PM is energised, the armature of the summation relay H drops and the auxiliary step-by-step distributor is brought into circuit again; the totalisation device calculates and records the sum of this term A_2B_2 and of the term $\pm A_1B_1$ already recorded the auxiliary step-by-step distributor advancing by one step at each operative stage from the contact **5** of the advancement bank *e* at which it was stopped (recording of the units in the row *α*, of the tens in *β*, the hundreds in *u*, of the thousands in *d*) and stopping at the contact **3** of the bank *e* at the end of this operation. It will be seen that the auxiliary step-by-step distributor always stops at an odd-numbered contact. If, on the contrary, any one of the terms A_qB_q during calculation has a sign for which the sorting relay PM is not energised, the armature of the summation relay H is held by its holding circuit and the auxiliary step-by-step distributor remains out of circuit; it remains stopped on the odd-numbered contact of the bank *e* which it has attained, because the line L*i* to which this contact is connected does not receive current.

On the other hand, it has been seen that when the sorting relay PM, at the commencement of the calculating operation of a term A_pB_p which has to be totalised, has current passing through it, the closing of its contacts **1** and **2** puts under current one of the displacement relays **0**Y or **1**Y. Each of these relays controls the holding circuit of the other connected permanently to a source of current, and therefore one of these relays is always energised.

Modification of the distribution

The distribution, that is to say, the control of the circuits of the calculating device for each operative stage, is attained in the construction shown in Figures 4 to 9, by means of step-by-step distributors similar to those employed in automatic telephony. According to the modification shown in Figure 10, the principal and auxiliary step-by-step distributors are replaced by chains of electro-magnets or relays.

The left-hand part of Figure 10 reproduces the transfer device of Figure 7 with the exception of the principal step-by-step distributor and with the sole difference that the contacts **3** of the supervising relays are directly in series between the line l_1 and a source of release current. The right-hand part of the figure shows the two chains, the centre one replacing the principal step-by-step distributor and that on the right the auxiliary step-by-step distributor.

It will be recalled that for the example considered in which there are four operative stages (four denominations of the result), each bank of contacts of the principal step-by-step distributor of the construction which has been described comprises four fixed contacts, each corresponding to a different stage. To the ten fixed contacts, for example, the contacts **1** (or **2**, **3**, **4**) which correspond in the ten banks c_1, c_2, . . ., c_{10} of contacts to a given operative stage, there corresponds in Figure 10 a bundle of ten wires for said stage, which bundle comprises a multi-contact stage switch *x***1** (or *x***2**, *x***3**, *x***4**). The line L_2 of Figure 7 is not required. Each stage switch is controlled by an electromagnet X**1**, X**2**, X**3**, X**4**, having two windings, a closing winding *f*, and an opening winding o. The linking together of the electro-magnets X is obtained by the connection of the closing winding of one of them to the opening winding of that which is two ranks in front of it: thus, the closing winding of X**3** is connected to the opening winding of X**1** and so forth. Furthermore, the closing winding of each of the electromagnets is connected to a terminal of an eleventh contact *x* of the switch corresponding to the preceding electromagnet, the other terminal of said contact being connected to one of the wires L*i*, L*ii*, L*ω* according to the rank of the electromagnet considered: even-numbered rank to L*i*, odd-numbered rank to L*ii*, except that of rank **1**, which is connected to L*ω* in such a manner that the current passing in said line produces the opening of the last switch *x***4**. The switch *x***4** comprises a twelfth contact o, one terminal of which is connected to the release wire l_3 of the multiplication device. The contacts **1** to **10** of the odd-numbered bundles on the one hand and the contacts **1** to **10** of the even-numbered bundles on the other are connected to the ten contacts of alternation switch **1***x* and **2***x*, the first eight wires of these bundles (distribution to the multiplication device) directly and the last two (distribution to the totalisation device D±AB) through the medium of the four contacts **2***i*, **3***i*, and **2***ii* and **3***ii* of the general reversing switch IG_1 which replaces the general reversing switch IG of Figure 6. In each alternation switch, the ten contacts are connected by their second terminal to the line L*ω* (connected to L*ii* during operation) or to the line L*i* according as to whether they correspond to odd-numbered or

even-numbered stages (alternation switches 1x or 2x), the first eight directly by wires 1Lω and 2Li, the last two through the medium of lines 1Lx and 2Lx and contacts 1 and 2 of the summation relay H_1 which replaces the summation relay H of Figure 9. Each of the alternation switches is controlled by an electromagnet, 1X or 2X, comprising a closing winding f and an opening winding o. The closing winding f of 1X and the opening winding o of 2X are connected to the opening line 2o of the second half of the transfer device. The closing winding f of 2X and the opening winding o of 1X are connected on the one hand to the opening line 1o of the first half of the transfer device and on the other hand to the wire 0Lo (normally connected to negative).

Associated with the supervising relays 1U and 2U are 1V and 2V, each having two windings, one 1 being connected, for the relay 2V, by the wire i to the line Li and for the relay 1V by the wire ii to the line Lω (normally connected connected to Lii). The second winding 2 is a holding winding. Each relay comprises three contacts 1, 2, 3, the contact 1 closed at rest, connecting the release wire l_1 of the addition device to one of the opening lines 1o or 2o, according as to whether it pertains to 2V or 1V; the contact 2, open at rest, establishes the connection of the holding winding 2 of its own energised relay, 1V or 2V; with a wire 1Lv or 2Lv connected to positive by the contact 3, at rest, of the other relay 2V or 1V; these two wires, 1Lv and 2Lv are "fourth circuit" lines connected to the contacts 3 and 4, closed at rest, of the summation relay H_1.

The device just described serves for distributing the current for the calculation of totals D±AB. Its operation is as follows. It has been seen that during the operation of the transfer device, any operative stage, that is to say, the duration of operation for the calculation of the digit of a given denomination of the result, is decomposed into two phases. In the first phase, one of the supervising relays (1U for example, odd-numbered stage), is energised and the current is supplied to the addition device by the contact 2 of the other relay (2U) which is at rest. In the second phase, that is to say, after the digit of the result has been obtained and the transfer has been recorded in the half of the transfer device corresponding to the second relay, the latter is energised by the current which passes through the contact u of the switch closed for recording the transfer, and the release line l_1 and the opening line (1o or 2o) of the first half of the transfer device have current passing through them. The opening of the switch which was closed in this half of the transfer device interrupts the energising of the first supervising relay, the armature whereof drops (first phase of the following stage), which, through the contact 1 of said relay, sends current to the line Li and through the contact 2 of said relay, to the addition device for the calculation of the digit of the partial result of the next denomination (even-numbered). Thus, in the first phase of an operative stage, only one of the supervising relays is energised, while in the second phase of the same stage, the supervising relays are both energised simultaneously. The two auxiliary supervising relays 1V and 2V operate on the contrary alternately. When in an operative stage one has been energised by the current passing into its first winding through the contact 1 of the supervising relay, the armature of which has dropped, said auxiliary relay has attracted its armature; the latter is held by the circuit comprising its own contact 2 contact 3, at rest, of the other auxilia until the first winding of the latter is e in the next operative stage. Thus, the iary relays 1V and 2V are under the de of the supervising relays 1U and 2U, t 1V being energised when at the comme of an odd-numbered stage 1U remains e and the current of the third circui through the first half of the transfer de relay 2V when, in an even-numbered s current passes through the second hal transfer device. That one of the auxilia which is energised during an operative mains energised for the entire duratio stage, and in the second phase of th when the transfer is recorded and th supervising relays is energised, the line then connected to its source of curren contacts 3 of the two supervising re release current of this line passes thr contact 1, at rest, of the other auxilia to the opening line of the half of the device to which said first relay correspo is to say, to the line 1o for an odd-n stage and to the line 2o for an even-n stage. While the two supervising relays energised, the third circuit (addition) i

The passage of the current to the li the second phase of an odd-numbered st duces the opening of the alternation s and the closing of the alternation sw When the armature of the supervising has dropped in the first phase of the n (even-numbered) the line 2Li is unde likewise the line 2Lx connected to Li by tact 1, at rest, of the relay H_1. The therefore arrives in the course of the fi of said stage at the even-numbered bun will pass to that one of these bundles the switch $x(n)$ is closed. If the swi closed (stage corresponding to the calcu the second digit of the result), the curr ing through the contact x of said swit gised the opening winding of the electr X1 and the closing winding of the electr X3. The switch $x3$ is closed for the ne In this stage (first phase) the passag current through the contact x of $x3$ w in the opening of $x2$ and the closing o There is, therefore, always at least on closed, and that one the reference of wh responds to the actual operative stage in the first phase the current of the al switch 1X or 2X, according to whether s is odd-numbered or even-numbered. sage of the current through this switch the opening of the one which precede the closing of the one which follows it. quently, in the second phase, the swit follows it is closed and is ready for stage.

The distribution action is briefly as f

Odd-numbered stage: "third circuit" ing a switch of the first half of the tra vice for the calculation of the result rank $\pi+1$ (odd-numbered).

First phase: Alternation switch 1x a switch x ($\pi+1$) closed; supervising rela auxiliary relay 1V energised; sending o through the second and third circuits; of x π closing of x ($\pi+2$).

Second phase: relays 1U, 1V, 2U energised; opening of the transfer switch $1r(n)$ and of the alternation switch $1x$, closing of $2x$; during this phase the second and third circuits are broken.

Even-numbered stage (result digit of rank $\pi+2$)

First phase.—supervising relay 2U and auxiliary supervising relay 2V energised: current sent through the second and third circuits; opening of $x(\pi+1)$ closing of $x(\pi+2)$.

Second phase.—relays 2U, 2V, 1U energised; opening of the transfer switch $2r(n)$ and of the alternation switch $2x$, closing of $1x$ interruption of the second and third circuits.

In the case of the calculation of successive totals ΣAB, the current distribution is effected by the chain of relays shown on the right-hand of Figure 10. This chain comprises six relays, Zu, Zd, Zc, Zm, $Z\alpha$, $Z\beta$ corresponding to the different rows of recording relays and ensuring the distribution in the same way as the banks c_0, e_1, c_2, of the auxiliary step-by-step distributor of Figure 9, each of said relays comprising two windings 1, 2 and five contacts 1, 2, 3, 4, 5. The first two contacts are connected in the linking circuits of the relays. Of the last three contacts of each of these relays (Zu, . . . $Z\beta$) the contact 3, open at rest, serves to establish the connection of the line lv of the row of recording relays of the same reference (u, . . . β) of the totalisation device with the line $1Lv$ or $2Lv$ according to whether the relay is of odd-numbered rank (u, c, α) or even-numbered rank (d, m, β) and the contacts 4 and 5, open at rest, serve to establish the connection of the exploration lines L^2c and L^1c or L^2m and L^1m, or . . . , of the two groups of relays of the row of recording relays (c, m, . . . d) with the lines $3L_2i$ and $4L_2i$ or $3L_2ii$ and $4L_2ii$, according as to whether the relay of the chain is of even-numbered or odd-numbered rank. The control winding 1 of each relay is connected to the line lv of the relay of preceding rank, its holding winding 2 is connected by the contact 2, open at rest, to the contact 1, closed at rest, of the second relay situated after it and by this contact to the line $zL4$ through the medium of the contact 13, closed at rest, of the preparation relay K, except for the relay Zc for which the connection to the line zL_4 is direct.

The distribution is effected in the following manner. At the commencement of the operation, the relay Zu is, as will be seen, energised. The auxiliary supervising relay 1V being energised and the relay 2V at rest, the wire $1Lv$ being therefore under current, the recording wire lvu receives current, the winding 1 of the relay Zd is energised and the armature of this relay is attracted and held by the holding winding 2 until the relay Zm is energised. At the same time, due to the fact that the wire lvu is under current, the first digit of the total is recorded in the row u of recording relays and the armatures of the relays of the row d drop; the wires $3L_2i$ and $4L_2i$ being under current (contacts 9 and 10 of the alternation switch $1x$ which is closed) the row c of recording relays is explored by wires L^1c and L^2c. At the next stage, the relay Zd being closed and the recording wire lvd under current, the relay Zc is energised, which breaks the holding circuit of the relay Zu, the armature of which drops, while at the same time the second digit of the total is recorded in the row of recording relays d, the row c being liberated and the row m explored. We thus have again, in the process of recording and exploring, the successive intervention of the rows of recording relays according to a closed cycle. In the present form of construction, however, the succession of one row to the next does not require the delay corresponding to the time required for the advancement of the step-by-step distributor. The relay in activity in fact prepares the relay which follows in the chain and the delay is reduced to that of the operation of the supervising relays U.

In regard to the control of the calculating device, Figure 10 shows some of the control members of first construction provided with the index 1 in the case where they are modified. The preparation relay K comprises three contacts 11, 12, 13 in addition to the contacts 1 to 10, not shown, of Figures 8 and 9 (the contact 7, Figure 9, is however, omitted). The contacts 11 and 12 connect to positive, when the relay K is energised, the line 2o and the line Lx, which terminate at the closing winding of the last stage switch ($x4$); the contact 13 then connects the winding 1 of the relay Zu to the line zL_4; it has been seen that at rest this contact connects this line to the contacts 1 of all the relays except the third, Zc, which is already connected. The general reversing switch IG_1 effects the same reversals of circuit as the reversing switch IG, but with doubling of the contacts 2 and 3. The summation relay H_1 which corresponds to the relay H, comprises four contacts 1, 2, 3, 4, closed at rest, in addition to the contact h, the first two between the lines Li, $L\omega$ and $2Lx$, $1Lx$, the last two on the lines $1Lv$, and $2Lv$. The sorting relay PM has likewise been shown with its contact g of the holding circuit H_1, the release relay Q, the winding of which is on the line l_9 connected to the release line l_3 and comprising the switch Id shown in the position for which D varies at each operation.

When the preparation button Io (not shown in Figure 10) is depressed, it has been seen that the armature of the preparation relay K is attracted, and that the contacts, 1 to 4 on the one hand and 5 to 10 on the other effect the necessary connections for the preparation of the transfer device (closure of $1rO$, energising of 1U) and of the totalisation device. Furthermore, the contacts 11 and 12 put the lines 2o and Lx under current and the winding f of the alternation electro-magnet 1X and the electro-magnet X4 of the stage switch are energised; the alternation switch $1x$ and the stage switch $x4$ are closed, while the switches of the second half of the transfer device are opened and the armature of the relay 2U in dropping puts by means of its contact 1 the line Lii under current; it is known, however, that the line Lii instead of being connected to the line $L\omega$, is connected to the wire $1Lo$ (contact 1 of the relay K). It follows that $1Lo$ is put under current which produces the opening of the switches of the first half of the transfer device except $1rO$, because the winding o of its electromagnet is not connected to negative. For the same reason and although the line Io connected to $1Lo$ is now under current, the windings f of 2X and o of 1X are not energised; the alternation switch $1x$ alone remains closed. On the contrary, the lines Io and 2o being both under current the same is the case for the line l_1 connected to one of these lines by the contact 1 of the auxiliary supervising relay, the armature of which has dropped, because these relays, each of which controls the holding circuit of the other, cannot remain energised at the same time. The current passing through l_1 releases the addition

device. On the other hand, the stage switch x_4 in closing has connected by its contact o the line l_3 to the line 2o, which produces the release in the "second circuit", and by its contact x the closing winding of X1, to the line Li which is under current, thereby closing the switch $x1$. For timing the analysing with the calculation a synchronisation device may be provided on the analysing device and be connected by a line Le to one of the closing windings of the stage switch $x1$ or $x2$, according to the manner in which synchronising is effected.

In the case in which the general reversing switch IG_1 is in the Δ position shown (calculation of D+AB), the lines IL_4 and zL_4 do not receive current; all the relays Z are at rest and their chain remains unused. In this case, when the button Io is released (starting), the armature of the relay K drops and the lines 2o and Lx no longer receive current, but the line Lii under current is now connected to Lω. It follows that the auxiliary supervising relay IV is energised and the lines ILω and ILx cause current to arrive at the alternation switch 1x which is closed, and to the stage switches of odd-numbered ranks.

When the general reversing switch IG_1 is on the contrary in the Σ position (calculation of ΣAB) the line IL_4 corresponding to that of the same reference in Figure 9 and the line zL_4 are under current during the preparation, the armature of the relay K being attracted. The contact 13 then connecting to the line zL_4 the winding 1 of the relay Zu, the latter is energised and attracts its armature which is held by the holding circuit: +, . . . zL_4, contact 1 at rest of Zc, contact 2 closed of Zu, winding 2 of Zu, —. When the lines 1Lv, 3L$_2i$ and 4L$_2i$ receive current, the wires lvu, L^1c, L^2c are then under current. As before, the calculation commences when the armature of the relay K having dropped, the wires 1 to 8 leaving the switch $x1$ are themselves also under current. Furthermore, the contact 13 of the relay K, being now at rest, connects to their current source the contacts 1 of the circuits of the holding windings of the relays of the chain.

The tables shown in Figures 11 and 12 indicate the periods of passage of the principal currents of the calculating device in the four operative stages, comprised by an operation D±AB, in the constructional example selected where the result comprises four characteristic digits at the most. Figure 11 relates to the first method of distribution, Figure 12 to the modification. Each table comprises on the right in addition to a column relating to the analysing, four columns relating to the operative stages 1 to 4. On the left are indicated the references of the principal members of the device. In the right-hand columns, the passage of a current through the member referred to in one of the lines of the left-hand column is indicated by different letters according to the circuit, said letters being juxtaposed on a length of this line which corresponds to the time of passage of such current, referred to the duration of an operative stage shown by the width of one of the columns 1 to 4. The letters referring to the nature of the current are as follows:

eeeeee...	First circuit current
xxxxxx..	Second circuit current
ssssss....	Third circuit current
rrrrrr....	Fourth circuit current
oooooo..	Release current
zzzzzz...	Holding current

For convenience, the following key is g
lating to the references of the first colum

Figure 11

$Au(n)$—$Ad(n)$, $Bu(n)$—$Bd(n)$	Electro-magnets for rec factors A and B
$Du(n)$—$Dm(n)$	Relay for recording the
P or M	Electro-magnets of the s or — totalisation
PM	Sorting relay
H	Summation relay
OY or 1Y	Displacement relay
$S^1(n)$, $S^2(n)$, $T^1(n)$, $T^2(n)$	Electro-magnets of the a totalisation switches
$P(n)$ and $T(n)$	Relays of the result AB total result
$1R(n)$	Electro-magnet of a sw first half of the transf
1U	Corresponding supervis
$2R(n)$	Electro-magnet of a sw second half of the tran
2U	Corresponding supervis
C	Electro-magnet for adv principal step-by-step
Q	Release relay.

Figure 12

$Au(n)$—$Ad(n)$, $Bu(n)$—$Bd(n)$	Electro-magnets of th switches
$Du(n)$—$Dm(n)$	Relay for recording the
Q	Relay for releasing the
P or M	Electro-magnets of the s or — totalisation
PM	Sorting relay
H	Summation relay
OY or 1Y	Displacement relay
$S^1(n)$, $S^2(n)$: $T^1(n)$, $T^2(n)$	Electro-magnets of th and totalisation swit
$P(n)$ and $T(n)$	Relay of the result AB total result
$1R(n)$	Electro-magnet of a sw first half of the transf
1U	Corresponding supervis
$2R(n)$	Electro-magnet of a sw second half of the tra
2U	Corresponding supervi
1V	Auxiliary supervising r
1X	Electro-magnet of the bered alternation swi
2V	Auxiliary supervising r
2X	Electro-magnet of the bered alternation swi

Referring now to Figures 13 to 25, the will be described which comprises the calculating device of Figures 4 to 9 and trol members according to the modificatio in Figure 10. All electrical members part of the calculating device, with exc the introduction members and sources o are accommodated in a casing (Fig. 13) upon a base 50 and having front, top a formed by metal sheets 51 joined at the angles iron 52. A number of frames 53 r the interior of the casing and vertically to bottom in the middle of the same, and support horizontal bars such as 54, 55 an 17) having screwed on them the variou cal members of the calculating device tures 57 and 58 are provided at the botto side walls for the passage of the cable o supply and of the cable of the result b wires AB and Σ.

In the lower part of the casing there a superposed rows of multiple switches 59 merical references of which are given b 14. Going from bottom upward, there row of multiple switches comprising groups of ten switches corresponding to and tens denominations of the factor and $bd_1(n)$. The second and third rows the multiple switches allocated to the the factor A and of the partial products ond row comprising the seven switche units denomination of the factor A, a the thirteen switches allocated to the the corresponding partial products (groups 1—$su(n)$ and 1—$sd(n)$) the t

comprising the seven switches of the tens denomination of the factor A, $ad(n)$ and the thirteen switches allocated to the digits of the corresponding partial products 2—$s(n)$ which, as already explained, form groups identical to those of 1—$s(n)$. A further row comprises, on the left-hand side as shown on Figures 13 and 14, the ten multiple switches of the totalisation device, i. e. the switches + and —, and the two groups $t^1(n)$, $t^2(n)$. On the same row, but on the right-hand part, there are provided the two groups of three transfer switches 1r and 2r and the four multi-contact stage switches x^1 to x^4.

In the upper part of the casing there are accommodated the various relays 60 of the calculating device, the six relays columns of the totalisation device (Fig. 9) being grouped together above the totalisation multi-contact switches $t^1(n)$, $t^2(n)$. Starting from the left-hand side of the casing as shown on Figures 13 and 14, there is first the column of relays Du . . . Dβ, then the seven columns allocated to the digits of the two groups into which each denomination digit of D is decomposed. These relays form the six rows D$u(n)$ . . . D$\beta(n)$ to which correspond the relays of the chain of relays Zu . . . Zβ for the current distribution to the totalisation device forming the ninth column Z. A further column comprises sorting relay PM, displacement relays 0Y and 1Y, relay Tκ and relay Tρ. The other relays T form a row of ten relays T0 . . . T9 at the uppermost part of the casing. On the same row, but on the left-hand side of the casing, there are the ten relays P(n). Another row, below said relays P(n) comprises the supervising relays 1U, 2U, 1V, 2V, preparation relay K, divided into two relays K_1 and K_2 mounted in parallel, and having a common delayed release relay J, summation relay H_1 and release relay Q. Below said row of relays there are further multiple switches comprising the preparation switch γ and the two alternation switches 1x, 2x and a board 61 (Fig. 13) bearing control members 62 and 63. These members comprise (Fig. 14) the general reversing switch IG_1, the release switches Ib and Id, the sign switch It, the preparation button Io and a further switch I for the general control of current supply for the various circuits of the device.

The various electrical members included in the machine will now be described and an explanation given of the manner in which the connection between the similar members are made. In fact, all the multi-contact switches are of the same construction and all the relays are of the same type, comprising a number of contacts appropriate to their function.

The construction of a multi-contact switch 59 will first be described, with reference to Figure 17. It comprises a ring of fixed contact 64, 65 mounted insulated in a frame 66. The contacts 64 are wider than the contacts 65 and are arranged alternately therewith. Each contact 64, 65 is provided with a tab 67 for making soldered connection to the wiring. A ring of splitted moving contacts 68 are embedded in a disc 69 of insulating material mounted on a spindle 70 supported in bearings in the frame 66. The disc 69 carrying the movable contacts is driven in reciprocatory rotation about its spindle 70 by one end of a lever 71 pivoted to the frame 66 at 72 and forming at its other end a movable armature 73 placed between the poles 74, 75 of two electro-magnets 76, 77. When the magnet 76 is energised, the lever 71 is moved in a clockwise direction and by means of a pin 78 on its right-hand end on Figure 17 moves the insulating disc 69 in an anti-clockwise direction, so that one part of the slit of the movable contacts 78 moves off a wide fixed contact 64 onto the adjacent narrow fixed contact 75. Each wide contact 64 is thus electrically connected to the adjacent narrow contact 65. The excitation of the other electro-magnet 77 conversely returns all the moving contacts to the position shown on Figure 17. These electro-magnet operated units are mounted in the casing with an arrangement as have been described with reference to Figure 13, each been screwed on and between two horizontal bars such as 54 and 55, with their electro-magnets in front as shown on Figure 13. From the tabs 67 a number of wires forming a bundle 79 lead to a connection frame fixed on the rear part of the casing and by means of which the wiring between the switches of a row of switches is effected.

This frame comprises a series of similar bars of insulating material 80 (Figs. 17 to 20) with metal blades 81 embedded therein. Each blade 81 is internally to the bar shaped so as to form notches 82 for locking them in the insulating material and splitted externally at 83 at both external ends. On each bar, the blades form two rows in staggered arrangement. To each multi-contact switch corresponds a bar 80, all the bars of the same row being aligned between two bars 56 and screwed on these bars. The blades 81 of the various bars are thus aligned in the transverse direction of the bars, as shown on Figure 18, so that they may be connected by wires 84 engaged into the slits 83 and soldered on the blades. Thus the wires may be easily disconnected, for instance when there is necessary to take a switch out of the casing, what can be effected after the screws have been removed by pulling from the front part of the casing the assemblage formed by the switch 59 and its bar 80.

The portions of connection frames shown on Figure 18 correspond to the four first multi-contact switches of the two rows of switches relating to the addition of partial products when starting from the right-hand wall of the casing as shown on Figure 13. On this figure, the wiring bears the same numerical reference as used in the diagram (Figs. 7 and 8). For instance the lower frame comprises the assemblage f_1 of bundles δ, η connecting the switches of the first group 0, 1 of the units and the assemblage f_2 of bundles δ, η connecting this group of switches to the five switches of the group 0, 2, 4, 6, 8 of the units and the assemblage f_3 of bundle δ, η connecting this group of switches to the first group of switches allocated to the tens. The coils of the electro-magnets of each multi-contact switch are the closing winding f and the opening winding o to which reference has been made in connection with the electrical diagrams. The blades of the lowermost row of blades as shown on Figure 18 which correspond to the positive terminal of the closing windings are each connected to the respective wire of the bundle p^1u and p^2u. The blades of the second row, which correspond to the positive terminal of the opening windings are connected to the release current input l_1. The blades of each of the last two rows at the top of the frame which correspond to the negative terminal of the windings are soldered to wires denoted by the sign —, connecting them to negative.

The type of relays used in the machine will now be described, for example, with reference to Figure 21. Such a relay comprises a frame 85 bolted

on the corresponding horizontal bar **54**. Each relay has a number of blades **86** in superposed arrangement supported by the frame **85** by means of insulating blocks. According to the number of connection to be made by the relay, there are one, two or three groups of blades **86** which are operated by a common oscillating armature **88** actuated by the coil **89** of the relay. The two relays shown on Figure 21 correspond to the relay T8 and D*u*1. The relay D*u*1 has only the two contacts *o* and *v*. The relay T8 has three groups of contacts disposed along the width of its movable armature. The middle group comprises the contact **8** closed at rest of the chain of contacts *tr* and the contact of the same rank opened at rest of the line of contacts *t* and the groups on both side have each only the contact of the same rank opened at rest of the lines of contacts **1***t* and **2***t*.

For the wiring between the relays there is provided a connection frame similar to that used for the wiring between the multi-contact switches, and comprising a bar **80** for each column of relays. Figure 22 shows the portion of this frame corresponding to the relays T9 to T5 and to the six rows (*u, d, . . . β*) of relays D*u* . . . D*β* and D*u*(*n*) . . . D*β*(*n*) (*n*=1, 0, 8–9, and 6–7). The numerical references which *n* represents are recalled on the bar **80**. All the bars **80** are screwed in transverse alignment on two horizontal bars **90, 56** fixed on the frame irons **53** of the casing. Some of the blades **81** are left staying on the bars and receive connecting wires **84** in the transverse direction of the bars, other have been bent sidewise as shown at **90** on Figures 19 and 20 to have soldered on them connecting wires **92** parallel to the length of the bars and in a plane different from that of the transverse wiring. The numerical references for the wires are the same as used on the diagram of the totalisation device shown on Figure 9. Further references have been devised for wires which are not denoted on this diagram. The blades of the uppermost row have soldered on them the wires *σ*9, *σ*8 . . . (not shown) of the result bundle Σ and are connected to a terminal of contact *t* of the corresponding relays the other terminal of which is connected by means of the blades of the second row to wire 3L4. Then, there are two rows of blades for the connections of the chain of contacts *tr* (wires *tra, trb*) the connection to the chain of contacts *pp* and *pm* (Fig. 9) being made directly by wires forming a bundle not shown. Two further rows of blades connected to one terminal of the contacts **1***t*, **2***t* are affected to the connection of these contacts in the lines of contact they form the numerical references indicating the wires of the bundle et^1et^2 to which these cross connections are connected in turn, a further row corresponding to the other terminal of said contacts and being connected to negative by the wire denoted by the sign —. The blades of the next row, which are connected to a terminal of the coil of the corresponding relays, receive the corresponding wires of the bundle *ft* (not shown) from the row of the totalisation switches, while the other terminal is connected to the wire —. Other transverse connections are made corresponding to a wire *lo*, a wire *lv* and a wire l_5 for each row of relays D*u*(*n*) . . . D*β*(*n*) and for cross connection between one terminal of the contact *v* of these relays, the corresponding wires being denoted by the numerical reference of the lines L^1u . . . and $L^1\beta$ and L^2u . . . $L^2\beta$ receiving current from the corresponding contacts of the distribution relays Z. The blades **90** on one side of each b corresponding to a column of relays D(*n*) are connected to the other terminal of th tact *v* of these relays receive the wire *le*(*n* nected to the closing winding of the corres ing totalisation switch. The blades **90** c other side of each bar **80** receive a wire of the bundles et^1 and et^2 for the energi of the relays D(*n*) for recording of the acteristic digits of a previously calculated uct, a further blade *ed*(*n*) of the type **81** connected for each relays to a wire for r ing of the characteristic digits of the known D when the calculation proceeds with s known term. The blades **90** of one side bar corresponding to the column of D*u* . . . D*β* receive the wire denoted as L on the other side, the wire denoted as L*v* lishes the connection between one terminal windings of the relays D*m*, D*α*, D*β* and the terminal is connected to the wire Lo of the row. For the relays D*u*, D*c*, D*m*, the firs minal of the windings are connected to th viously mentioned wire—the end of wh soldered on the corresponding blades **90**.

Regarding the control members of the c it has been seen with reference to the di shown on Figures 4 to 9 and the modifi of Figure 10, that there are four control sw and a control button. As already mentione switches are fixed on the board **61** and a f control switch I is provided for the interr of the feeding currents of the device. A control switches are denoted by the same ence number **62** while the preparation but denoted by **63** on the board shown on Figu As shown on Figure 23, the board **61** is against the rear face of the front plate 5 on two horizontal bars **54, 55** in front frame **53** by screws **93** passing through s sleeves **94**. The switches **62** are accomm in the space thus formed. All these switch of the same construction each comprising, cordance with the circuits it has to cont number of fixed contacts **95** embedded in i tion disc in superposed arrangement. A c spindle having an external handle **97** bea sulated movable contacts **99** circularly di on the shaft and which close or open the sponding circuits, according to the position handle. The return spring preparation **63** may close two contacts **100** and **101** f control of the relay K and J.

The connections between the various ele members of the machine other than the w described with reference to the conn frames are to be seen on the diagram of F 4 to 10.

The two bundles of ten wires, AB and Σ ing from the relay P(*n*) and T(*n*) form the leaving the machine by the aperture **58** and to control electrical punching machines type shown in United States Patent No. 1,7 Such a machine comprises a carriage feedi card step by step through a punching mech operated by a number of electro-magnets cated to the figures 0 to 9 and which w connected to the ten wires 0 to 9 of one of result bundles.

The calculating device receives current the various source of currents and from t troduction members for the digits of the f and term, through a bundle of wires form cable passing through the aperture **57** of th ing.

An electrical sensing machine will now be described which allows it to introduce in the calculating device the said digits recorded on perforated cards. Such a device is shown on Figure 24. A frame 102 houses in its lower part an horizontal main shaft 103 carried by bearings in the frame. On this shaft is keyed a gear 104 in mesh with a gear 105 mounted idle on a shaft 106 and forming part of an electromagnetically operated clutch of known construction comprising a plate 107 keyed on the shaft 106; this latter bears a pulley 108 driven through a belt 109 by an electrical motor 110. The clutch is brought into gear by the energisation of a magnet receiving current from the wire Le connected to the closing winding of the stage switch $x1$ of Figure 10. Declutching is effected by a contact 111 connected to the release magnet of the clutch and operated by a boss 112 of a circular cam 113 keyed on shaft 103. This cam has a slotted face for actuation of the feeding mechanism and the sensing device which will now be described. In the slot 114 runs a roller 115 pivoted at the end of an horizontal rod 116 adjustably mounted on a rod 117, their assembly being reciprocably guided by bearing 118 and 119. A boss 120 on rod 117 is lodged in a slot 121 of a lever 122 pivoted at 123 and comprising an adjustable rod 124 connected by a crank 125 to a card pusher 126 sliding in the frame and acting on the lowermost perforated card 127 contained in a magazine 128. These cards are made of insulation material. When picked out from the magazine 128 by the pusher 126, the card will be driven by feeding rollers 129 in continuous rotation and thrown on the table 130 of the sensing device against a stop 131 fixed on the side of a vertically reciprocable pins box 132. The table 130 is insulated from the frame and connected to the closing winding of the electro-magnet of the stage switch $x2$ shown on Figure 10. The pins box 132 is fixed through insulation to a vertically reciprocable yoke 134 on which is pivoted a roller 135 running in the slot 114 of the cam 113. The sensing pins 136 are guided in the box and returned to their upper position by spring 137. There are eight rows of ten pins allocated to the digits 0 to 9 of the various denominations of factors A and B and of term D. They receive current from the table 130. Above this table, a plate of insulation material 138 fixed to the frame comprises contacts 139 embedded therein. These contacts are shown at an enlarged scale on Figure 25. There are two types of contacts according to the rows of the sensing pins to which they correspond. Some of them 140 for the introduction of factor B are single contacts and the other 141 for the introduction of factor A and term D are double and separately connected to corresponding windings of the electro-magnets or relays of the two groups in which the digits of these factor or term are decomposed. To these contacts are soldered wires forming a bundle which join the lines from the sources of current to form the cable entering the calculating device at 57. When the stop 131 is in its lower position, the card is thrown out of the sensing device by a known roller (not shown) continuously driven and resiliently contacting said card. This latter is driven by rollers 142 in continuous rotation and thrown into the receptacle 143. A control switch 144 is provided on frame 102 to control the motor.

The operation of the sensing machine in connection with the calculation is as follows. A group of perforated cards recording the digits of the factors and term are placed in the magazine 128. The motor 110 is started and drives shaft 106 in continuous rotation. The clutch being out of gear, shaft 103 and cam 113 remain at rest. The handles of the switches 62 corresponding to numerical references IG_1, Ib, Id, It are driven into the desired position. Then the control switch I is closed, supplying current to the calculating device, which operates as has been explained with reference to the modification shown on Figure 10. Depression of control button Io energised relay K which effects the necessary connection for the preparation of the transfer device and the totalisation device. It has been seen that the closing winding of the stage switch $x1$ is then energised by the current received from contact x of $x4$ (Fig. 10). This current also energises the closing electro-magnet of the clutch of the sensing apparatus and the clutch is brought into gear. Then shaft 103 is driven and slot cam 113 rotates pulling the sensing box downward and the actuating rod 116—117 in the direction of the left-hand side of Figure 24. During the downward stroke of pins box 132, stop 131 is depressed and the card which was kept in the sensing device thrown out into the receptacle 143. After half a revolution of the cam, the card pusher 126 begins its feeding stroke pushing a card into engagement with rollers 129 which throw it into the sensing device where it is stopped by stop 131 which begins its upward movement together with the pins box. The pins which fall into perforation are brought into connection with the fixed contacts 139, and pins box remains at its uppermost position while contact 111 has been closed by boss 112 of the cam 113 thus energising the releasing magnet of the clutch. No current more passes through the pins until the first calculation stage is reached when the closing winding of the stage switch $x2$ receives current together with the table 130 which is connected to this winding. The digits recorded by the perforated card are thus introduced in the calculation device and the calculation starts.

The current is cut off at the end of the first phase of the first stage, but the card remains in the sensing device and the pins in their sensing position until the calculation is completed when the closing winding of the last stage switch $x4$ again receives current and the closing magnet of the clutch is again energised. Then the card is thrown out of the sensing device and replaced by the next card and a new calculation starts without interruption.

In the course of each calculation the result digits are successively recorded by perforations on a card fed through the punching machine.

It should be recalled that the constructional example described and shown has been provided for the calculation of operations comprising at the most four denominations of the result. If one of the factors A or B had a number of digits greater than two, it would be necessary to provide on the one hand devices for introducing and recording the digits of these factors corresponding in number to the denominations of said factors and addition switch groups in a number corresponding to the total number of digits of the two factors, and on the other hand in the distribution devices, contacts for each bank of the principal step-by-step distributer, or stage switches in a number equal to said total. Likewise, there would be necessary, in a number equal to this total increased by two, rows of recording relays and of contacts per bank of the auxiliary step-by-step

distributor or relays of the chain of relays. Finally, the transfer device would have to comprise a number of switches equal to the digit of the largest transfer which may intervene in the calculation. Furthermore, it is evident that the calculating device according to the invention is capable of effecting operations on decimal numbers, although in the preceding description the last digit on the right has been termed the units digit. In order to effect an operation comprising numbers with more or less decimals, each number will be given as many decimals as the number which has the most by adding zeros. The last digit on the right will be taken as the units digit and the decimal point will be replaced in the result of the operation.

As has been seen, the device described makes it possible to effect not only operations AB, $D \pm AB$, ΣAB, but also to effect operations by keeping B constant and for the totalisations by keeping D or B, or D and B constant and to totalise the products, irrespective of their sign or those which have one of the signs plus or mi Finally, the totalisation device shown in Figu in itself constitutes, independently of the o partial devices, a device which may be used carrying out additions and subtractions.

In addition, the invention is by no means ited to the particularly described constructio the circuits necessary for the operations. In ticular, relays may be employed in place of various multi-contact switches having two co windings, an opening and a closing winding, pearing in the diagrams and vice-versa. The cuits may likewise be adapted to other group of the digits of the Pythagorean tables, com the use of other systems of notation and und modifications of arrangement or control, w remaining within the scope of the appe claims.

FRITZ MEZGE

PUBLISHED
MAY 25, 1943.
BY A. P. C.

F. MEZGER

ELECTRICAL CALCULATING APPARATUS

Filed April 21, 1939

Serial No.
269,265

17 Sheets-Sheet 1

FIG. 1.

TABLES I, UNITS

Group 0, 1

a \ b	0	1	2	3	4	5	6	7	8	9
0	0	0	0	0	0	0	0	0	0	0
1	0	1	0	1	0	1	0	1	0	1
2	0	0	0	0	0	0	0	0	0	0
3	0	1	0	1	0	1	0	1	0	1
4	0	0	0	0	0	0	0	0	0	0
5	0	1	0	1	0	1	0	1	0	1
6	0	0	0	0	0	0	0	0	0	0
7	0	1	0	1	0	1	0	1	0	1
8	0	0	0	0	0	0	0	0	0	0
9	0	1	0	1	0	1	0	1	0	1

Group 0, 2, 4, 6, 8

a \ b	0	1	2	3	4	5	6	7	8	9
0	0	0	0	0	0	0	0	0	0	0
1	0	0	2	2	4	4	6	6	8	8
2	0	2	4	6	8	0	2	4	6	8
3	0	2	6	8	2	4	8	0	4	6
4	0	4	8	2	6	0	4	8	2	6
5	0	4	0	4	0	4	0	4	0	4
6	0	6	2	8	4	0	6	2	8	4
7	0	6	4	0	8	4	2	8	6	2
8	0	8	6	4	2	0	8	6	4	2
9	0	8	8	6	6	4	4	2	2	0

TABLES I, TENS

Group 0, 1, 2

a \ b	0	1	2	3	4	5	6	7	8	9
0	0	0	0	0	0	0	0	0	0	0
1	0	0	0	0	0	0	0	0	0	0
2	0	0	0	0	0	1	1	1	1	1
3	0	0	0	0	1	1	1	2	2	2
4	0	0	0	1	1	2	2	2	0	0
5	0	0	1	1	2	2	0	0	1	1
6	0	0	1	1	2	0	0	1	1	2
7	0	0	1	2	2	0	1	1	2	0
8	0	0	1	2	0	1	1	2	0	1
9	0	0	1	2	0	1	2	0	1	2

Group 0, 3, 6

a \ b	0	1	2	3	4	5	6	7	8	9
0	0	0	0	0	0	0	0	0	0	0
1	0	0	0	0	0	0	0	0	0	0
2	0	0	0	0	0	0	0	0	0	0
3	0	0	0	0	0	0	0	0	0	0
4	0	0	0	0	0	0	0	0	3	3
5	0	0	0	0	0	0	3	3	3	3
6	0	0	0	0	0	3	3	3	3	3
7	0	0	0	0	0	3	3	3	3	6
8	0	0	0	0	3	3	3	3	6	6
9	0	0	0	0	3	3	3	6	6	6

FIG. 3.

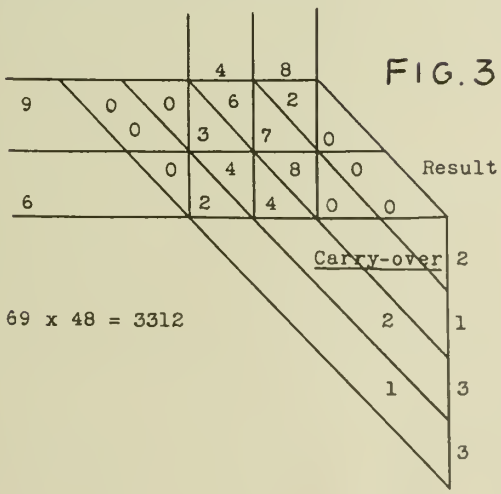

69 x 48 = 3312

Inventor
Fritz Mezger
By
Young, Emery & Thompson
Attorneys

PUBLISHED
MAY 25, 1943.
BY A. P. C.

F. MEZGER

ELECTRICAL CALCULATING APPARATUS

Filed April 21, 1939

Serial No.
269,265

17 Sheets-Sheet 2

FIG. 2.

TABLES II, UNITS

Group 0, 1

a \ b:	0	1	2	3	4	5	6	7	8	9
0 5	00	01	00	01	00	01	00	01	00	01
2 7	00	01	00	01	00	01	00	01	00	01
4 9	00	01	00	01	00	01	00	01	00	01
6 1	00	01	00	01	00	01	00	01	00	01
8 3	00	01	00	01	00	01	00	01	00	01

Group 0, 2, 4, 6, 8

a \ b:	0	1	2	3	4	5	6	7	8	9
0 5	00	04	00	04	00	04	00	04	00	04
2 7	00	26	44	60	88	04	22	48	66	82
4 9	00	48	88	26	66	04	44	82	22	60
6 1	00	60	22	82	44	04	66	26	88	48
8 3	00	82	66	48	22	04	88	60	44	26

TABLES II, TENS

Group 0, 1, 2

a \ b:	0	1	2	3	4	5	6	7	8	9
0 5	00	00	01	01	02	02	00	00	01	01
2 7	00	00	01	02	02	10	11	11	12	10
4 9	00	00	01	12	10	21	22	20	01	02
6 1	00	00	10	10	20	00	00	10	10	20
8 3	00	00	10	20	01	11	11	22	02	12

Group 0, 3, 6

a \ b:	0	1	2	3	4	5	6	7	8	9
0 5	00	00	00	00	00	00	03	03	03	03
2 7	00	00	00	00	00	03	03	03	03	06
4 9	00	00	00	00	03	03	03	06	36	36
6 1	00	00	00	00	00	30	30	30	30	30
8 3	00	00	00	00	30	30	30	30	60	60

Fritz Mezger Inventor
By
Young, Emery & Thompson
Attorneys

PUBLISHED

MAY 25, 1943.

BY A. P. C.

F. MEZGER

ELECTRICAL CALCULATING APPARATUS

Filed April 21, 1939

Serial No.

269,265

17 Sheets-Sheet 3

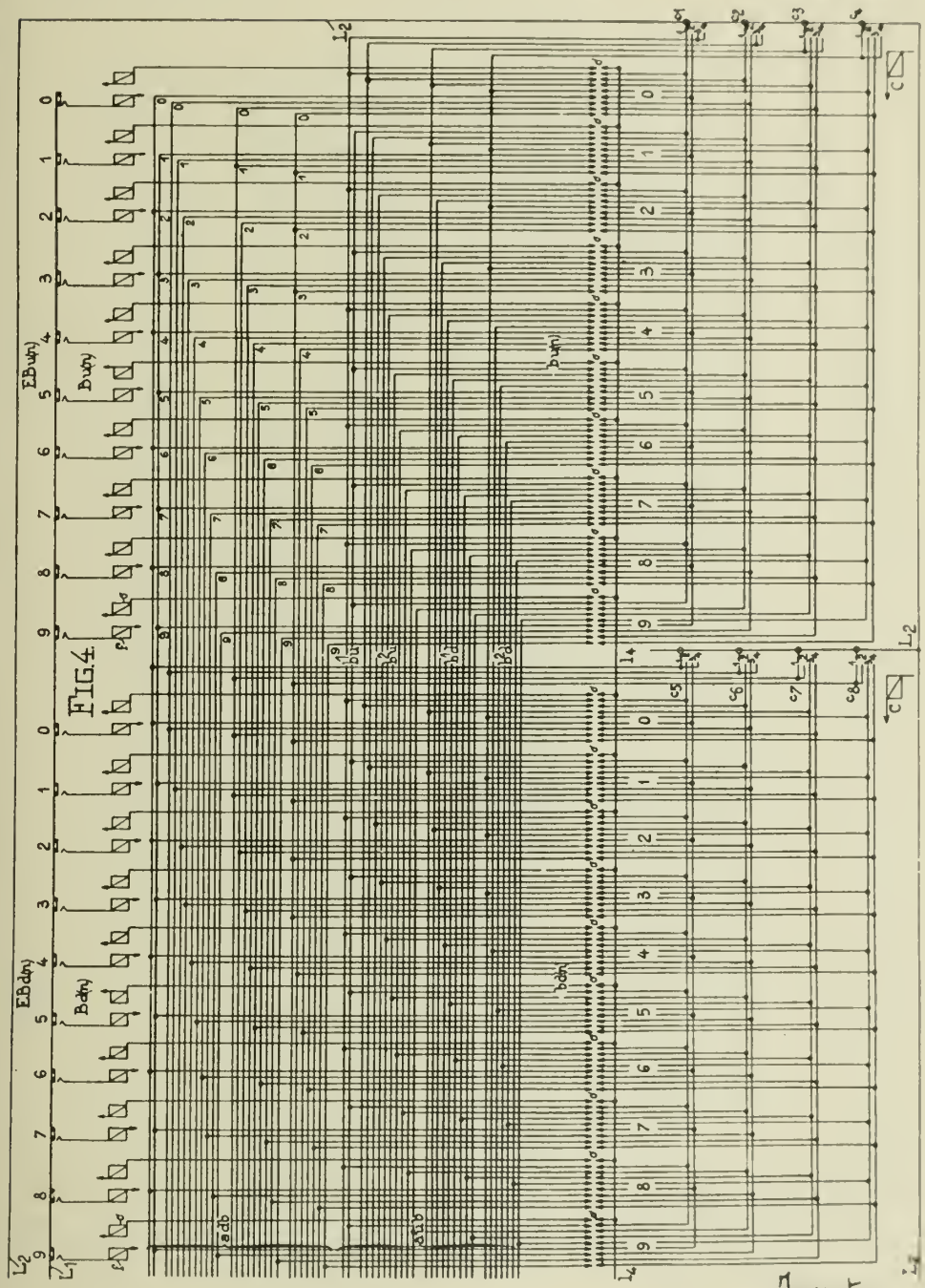

Inventor
Fritz Mezger
By
Young, Emery & Thompson
Attorneys

PUBLISHED

MAY 25, 1943.

BY A. P. C.

F. MEZGER

ELECTRICAL CALCULATING APPARATUS

Filed April 21, 1939

Serial No. 269,265

17 Sheets-Sheet 4

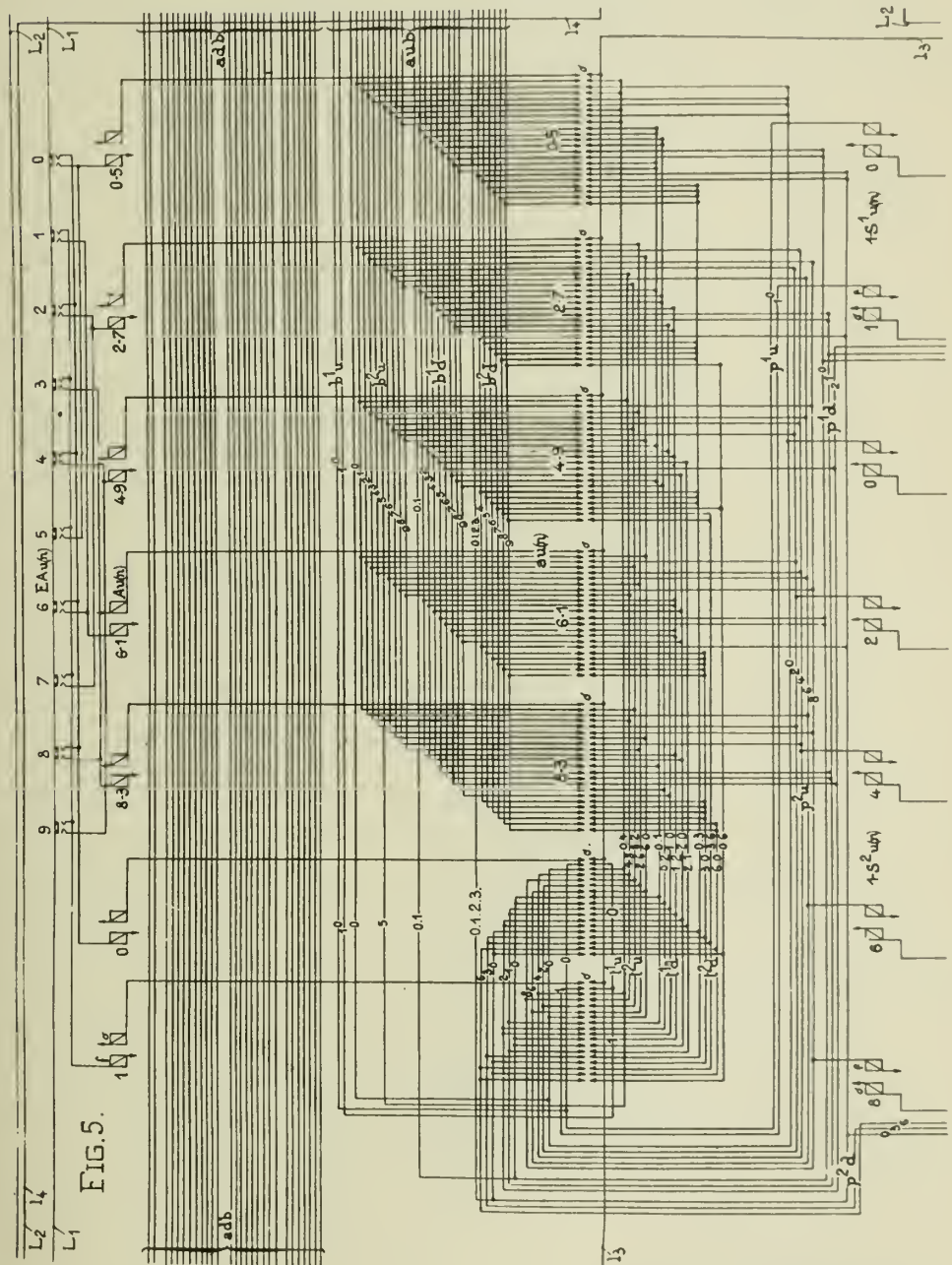

FIG. 5.

Fritz Mezger Inventor

By

Young, Emery & Thompson

Attorneys.

PUBLISHED

MAY 25, 1943.

BY A. P. C.

F. MEZGER

ELECTRICAL CALCULATING APPARATUS

Filed April 21, 1939

Serial No.

269,265

17 Sheets-Sheet 5

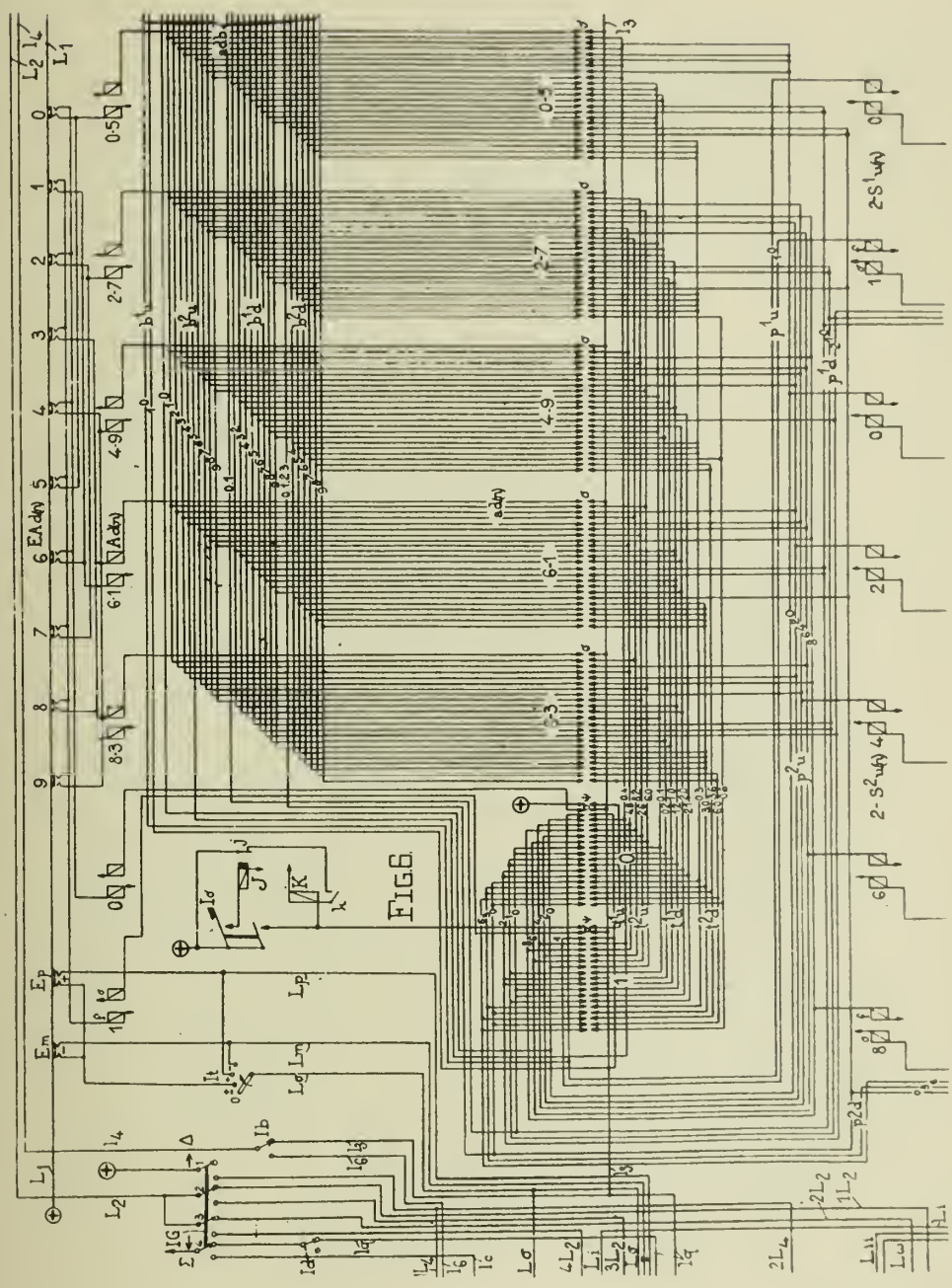

Inventor
Fritz Mezger
By
Young Emery & Thompson
Attorneys.

PUBLISHED

MAY 25, 1943.

BY A. P. C.

F. MEZGER

ELECTRICAL CALCULATING APPARATUS

Filed April 21, 1939

Serial No. 269,265

17 Sheets-Sheet 6

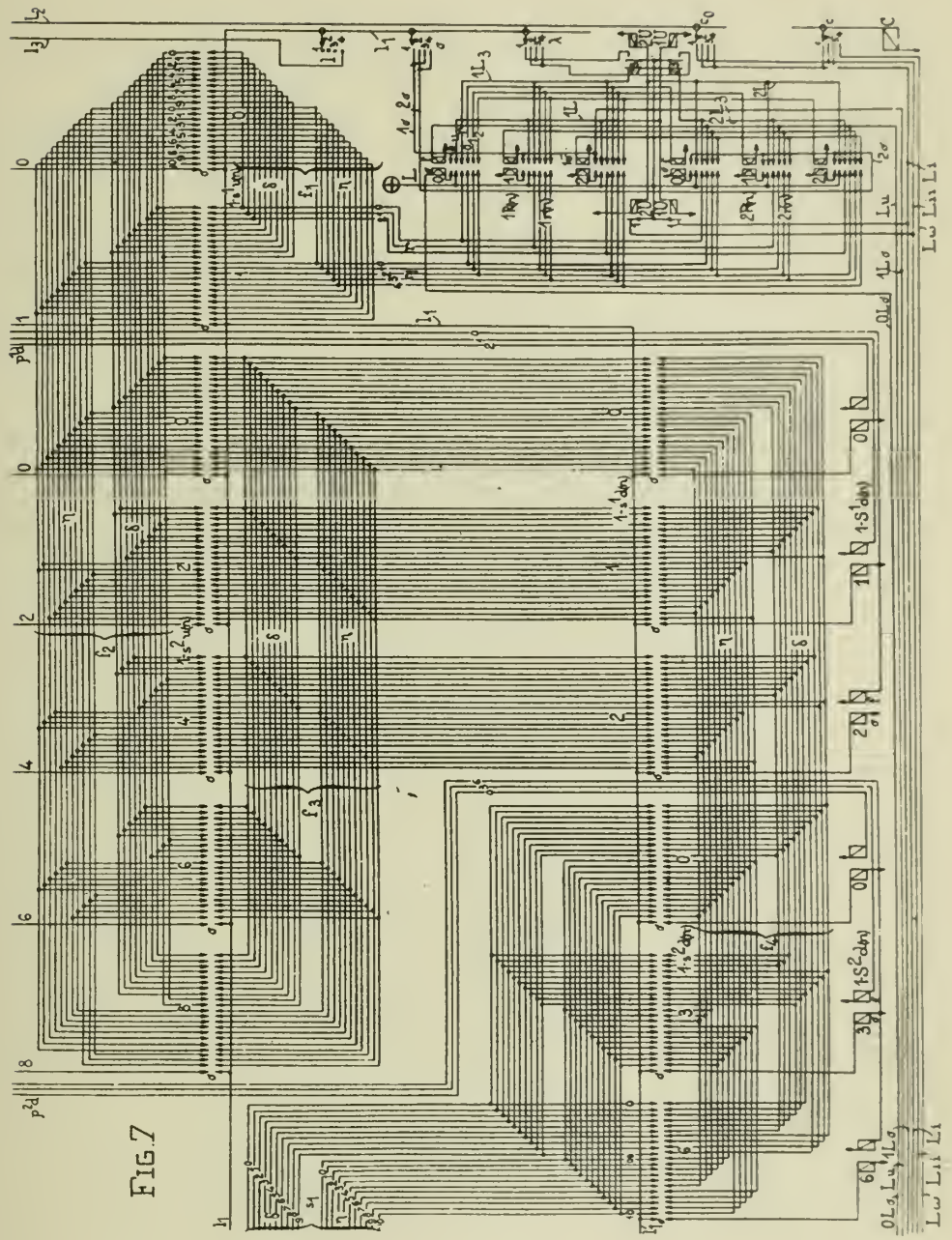

FIG. 7

Inventor
Fritz Mezger
By
Young, Emery & Thompson
Attorneys.

PUBLISHED

MAY 25, 1943.

BY A. P. C.

F. MEZGER

ELECTRICAL CALCULATING APPARATUS

Filed April 21, 1939

Serial No.

269,265

17 Sheets-Sheet 7

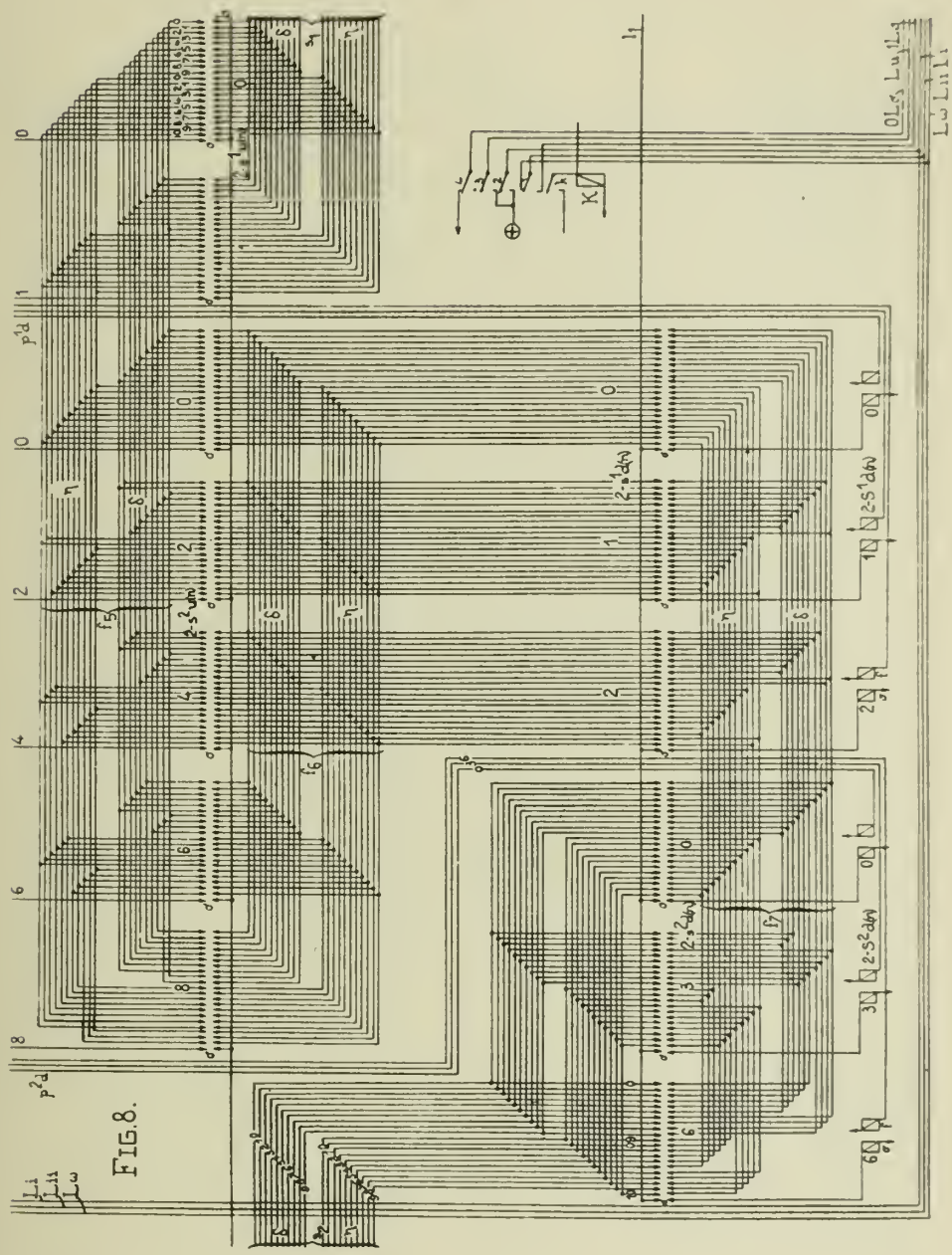

FIG. 8.

Inventor
Fritz Mezger
By
Young, Emery & Thompson
Attorneys

PUBLISHED

MAY 25, 1943.

BY A. P. C.

F. MEZGER

ELECTRICAL CALCULATING APPARATUS

Filed April 21, 1939

Serial No.

269,265

17 Sheets-Sheet 8

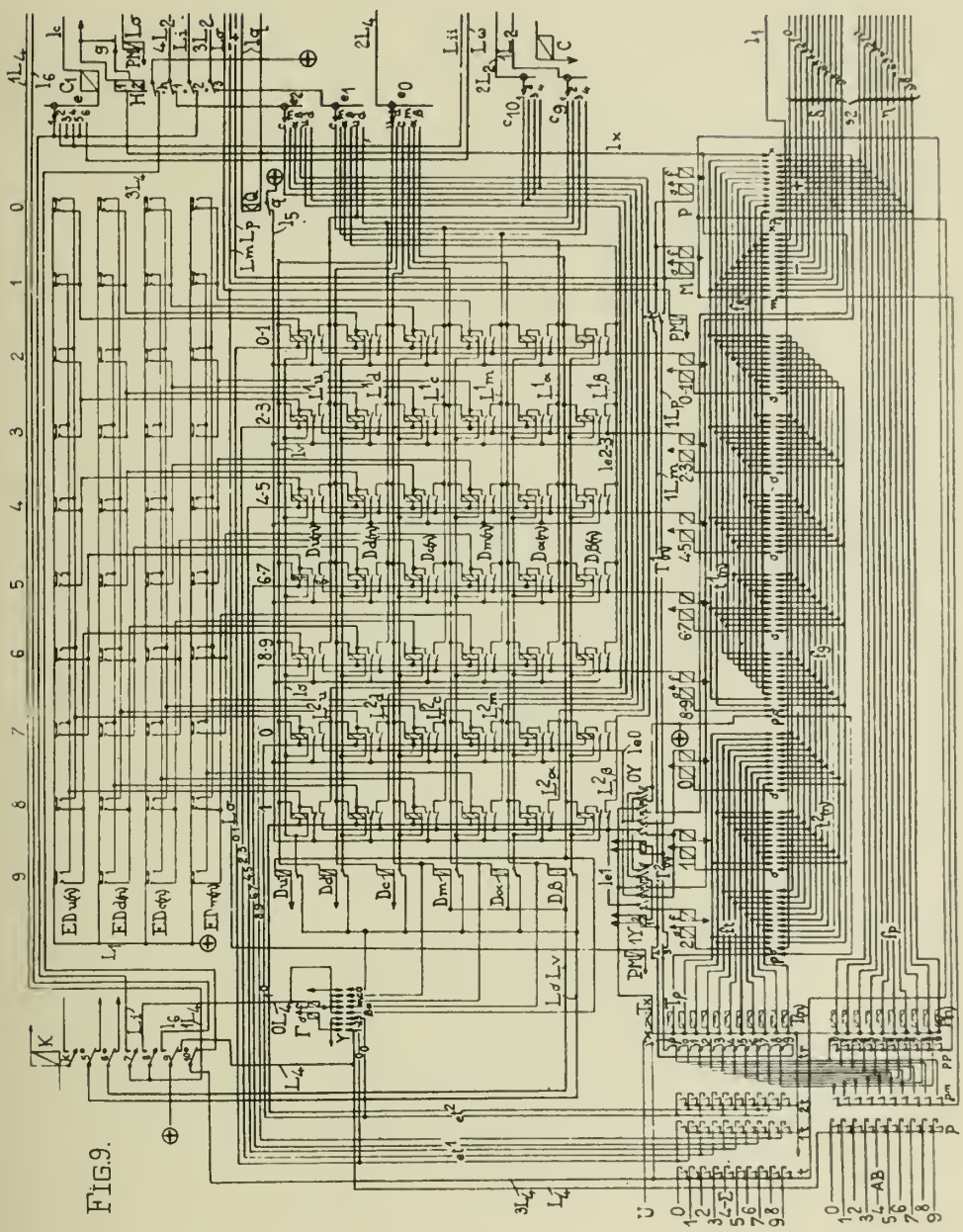

FIG. 9.

Inventor
Fritz Mezger
By.
Young, Emery & Thompson
Attorneys.

PUBLISHED

MAY 25, 1943.

BY A. P. C.

F. MEZGER

ELECTRICAL CALCULATING APPARATUS

Filed April 21, 1939

Serial No. 269,265

17 Sheets-Sheet 9

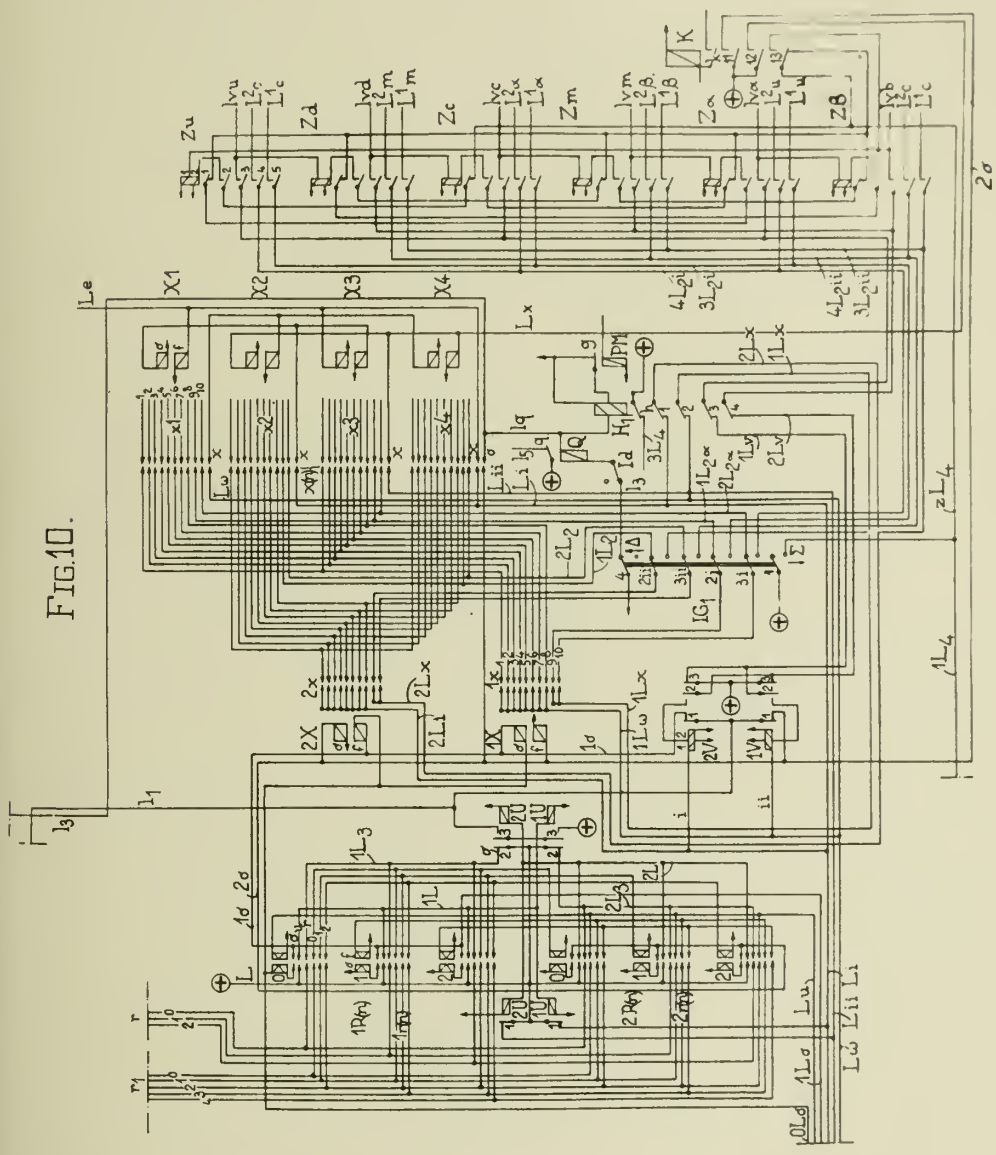

FIG. 10.

Fritz Mezger Inventor

By

Young, Emery & Thompson

Attorneys.

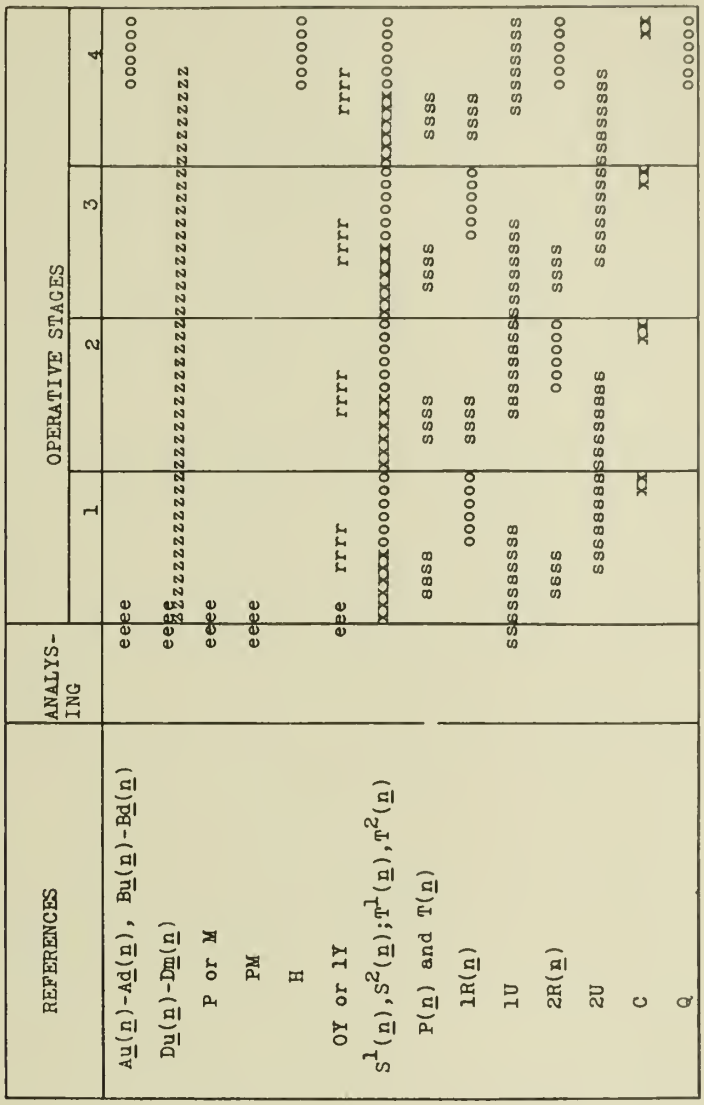

FIG. 11.

Fritz Mezger Inventor
By
Young, Emery & Thompson
Attorneys

PUBLISHED
MAY 25, 1943.
BY A. P. C.

F. MEZGER

ELECTRICAL CALCULATING APPARATUS

Filed April 21, 1939

Serial No.
269,265

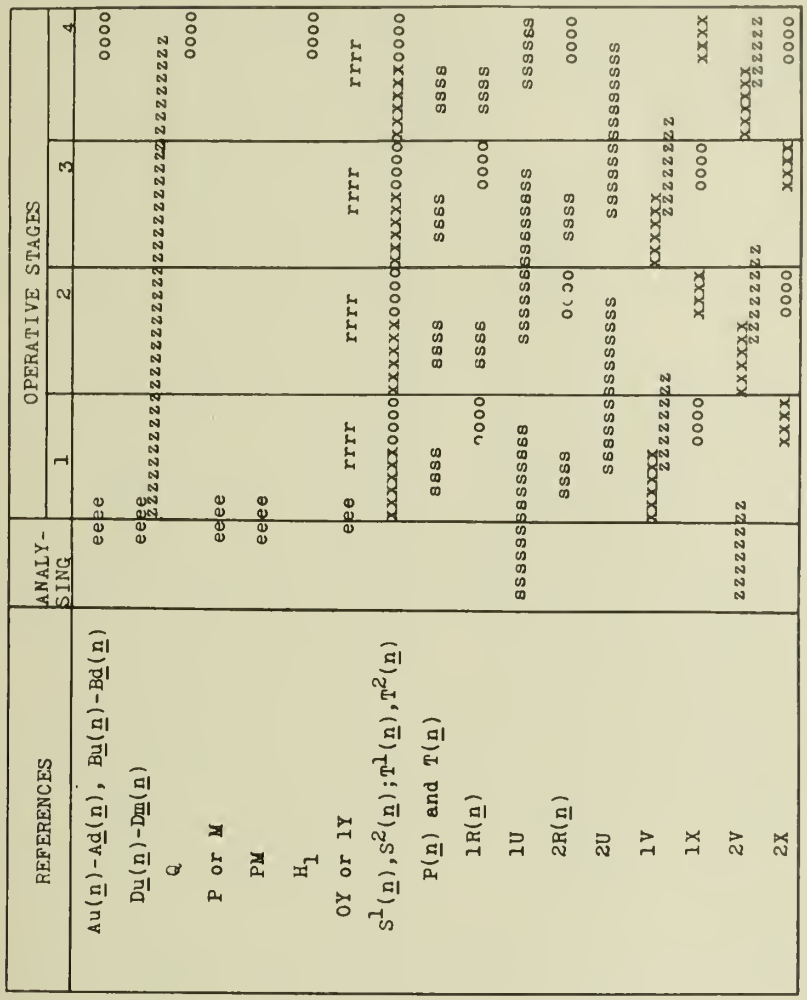

FIG. 12.

Inventor
Fritz Mezger
By
Young, Emery & Thompson
Attorneys

PUBLISHED

MAY 25, 1943.

BY A. P. C.

F. MEZGER

ELECTRICAL CALCULATING APPARATUS

Filed April 21, 1939

Serial No. 269,265

17 Sheets-Sheet 12

FIG. 13.

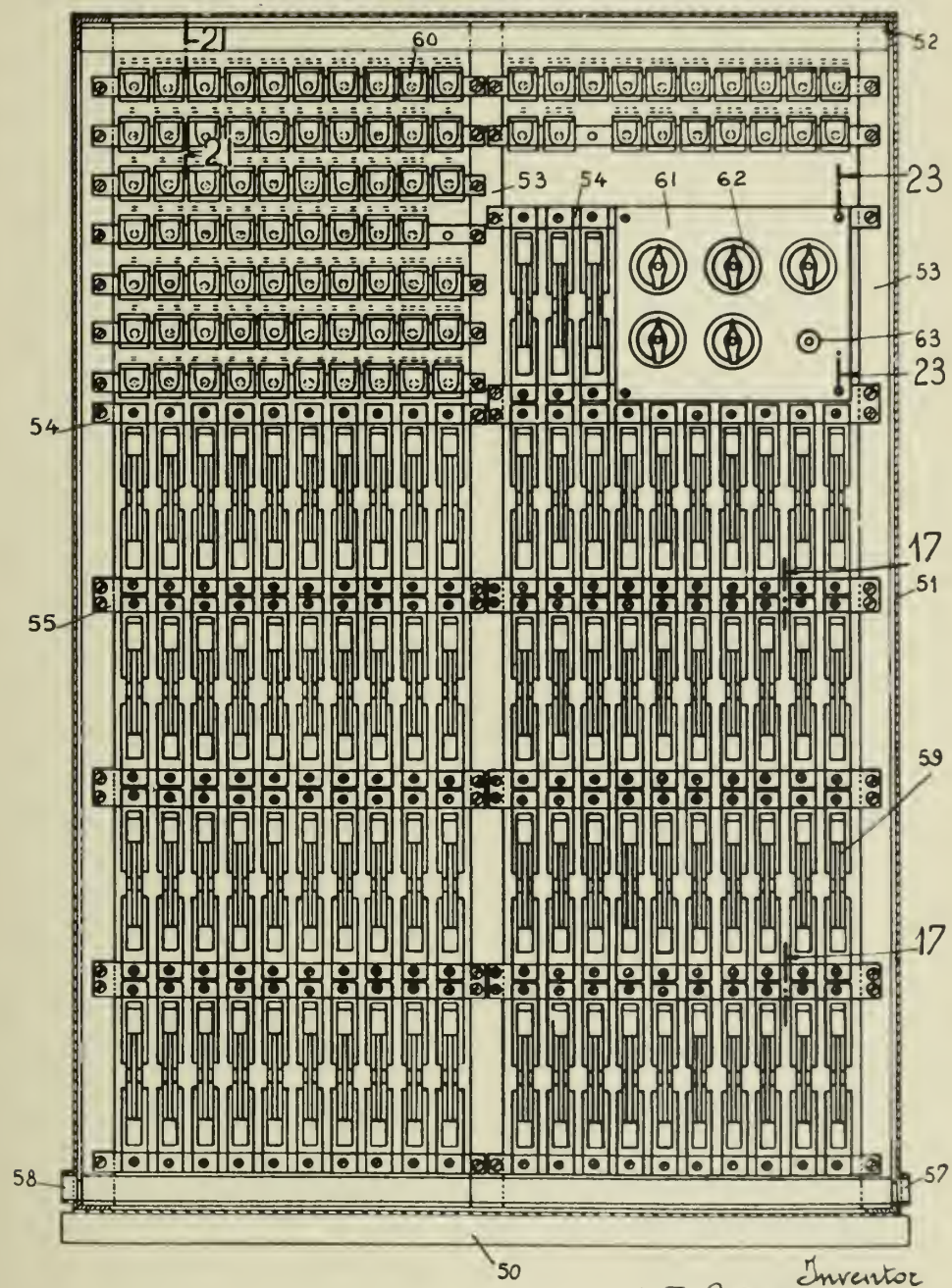

Inventor
Fritz Mezger
By
Young, Emery & Thompson
Attorneys

PUBLISHED
MAY 25, 1943.
BY A. P. C.

F. MEZGER

ELECTRICAL CALCULATING APPARATUS

Filed April 21, 1939

Serial No.
269,265

17 Sheets-Sheet 13

FIG.14.

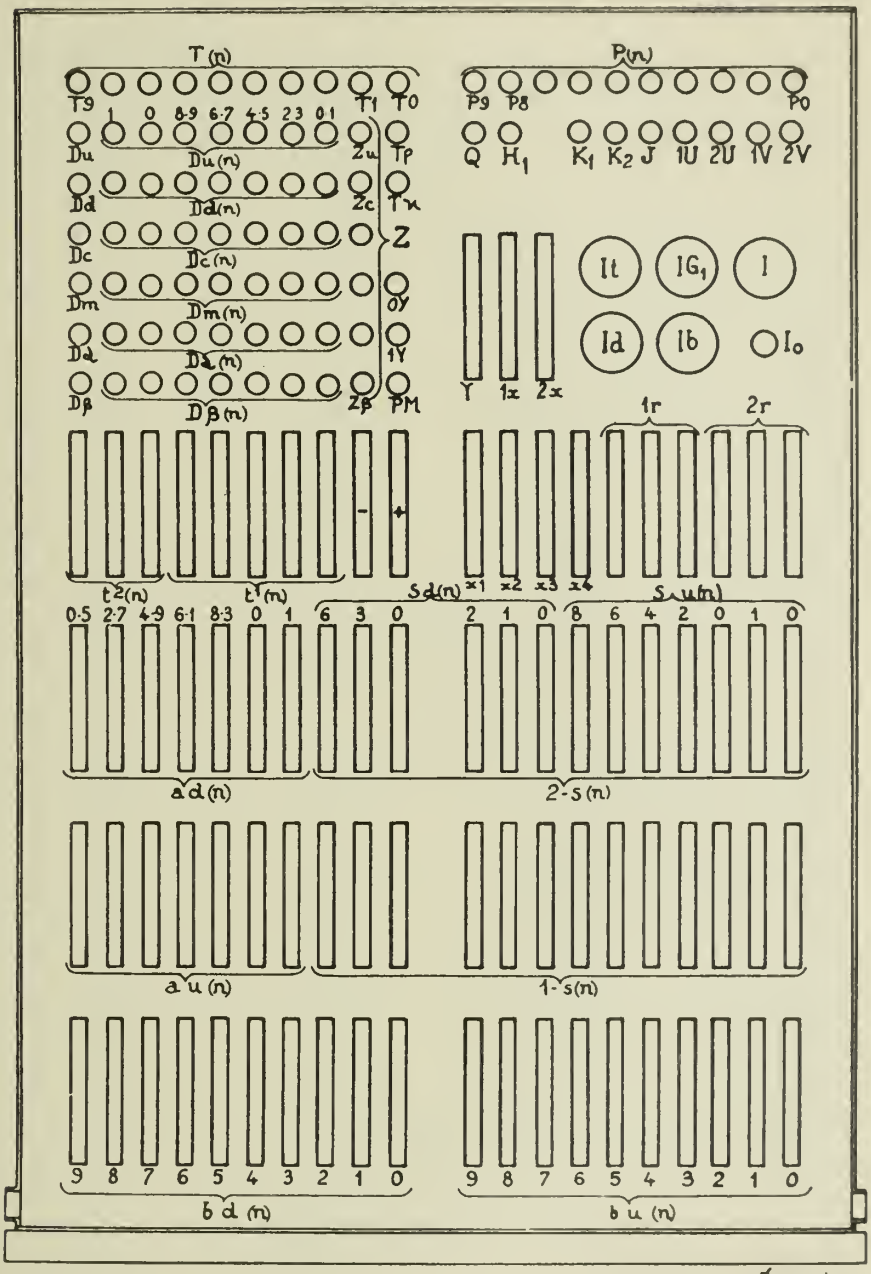

Inventor
Fritz Mezger
By
Young, Emery & Thompson
Attorneys

PUBLISHED

MAY 25, 1943.

BY A. P. C.

F. MEZGER

ELECTRICAL CALCULATING APPARATUS

Filed April 21, 1939

Serial No. 269,265

17 Sheets-Sheet 14

FIG.15.

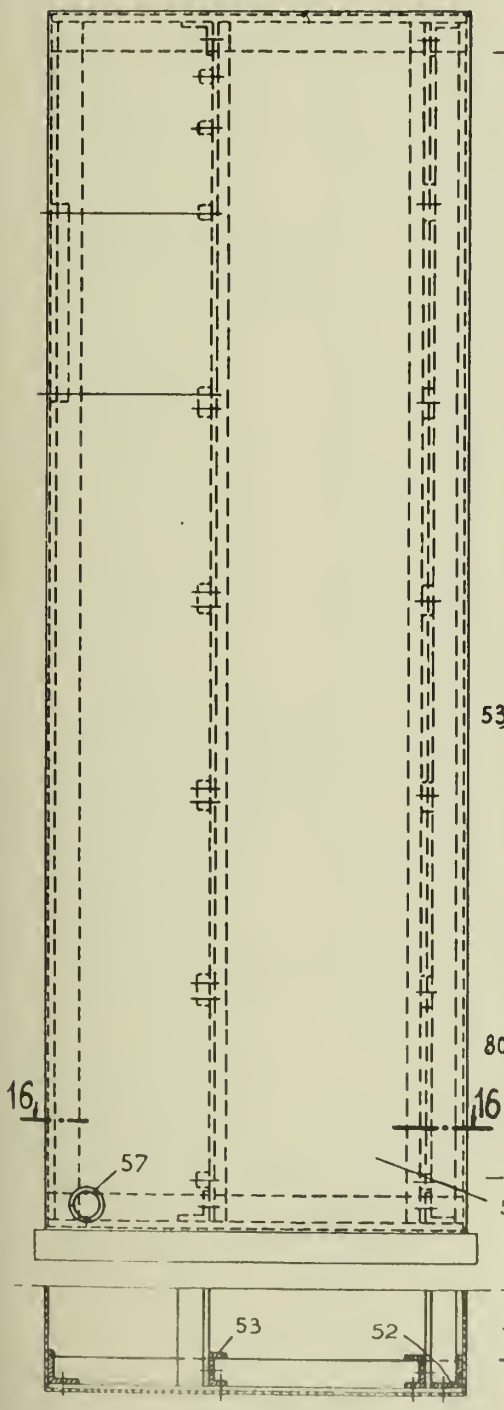

FIG.18.

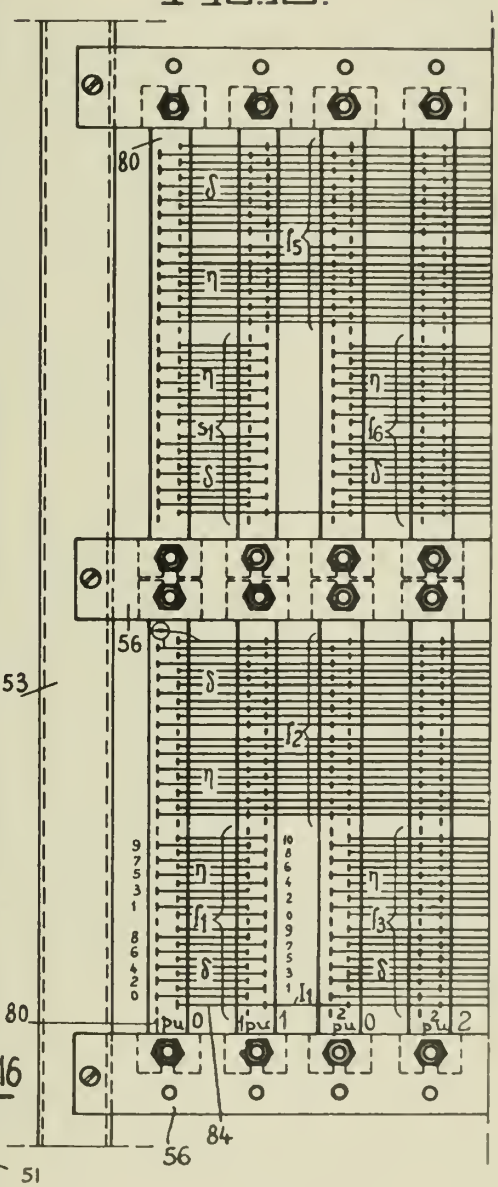

FIG.16.

Inventor
Fritz Mezger
By
Young, Emery & Thompson
Attorneys.

PUBLISHED
MAY 25, 1943.
BY A. P. C.

F. MEZGER
ELECTRICAL CALCULATING APPARATUS
Filed April 21, 1939

Serial No.
269,265
17 Sheets-Sheet 15

FIG.17.

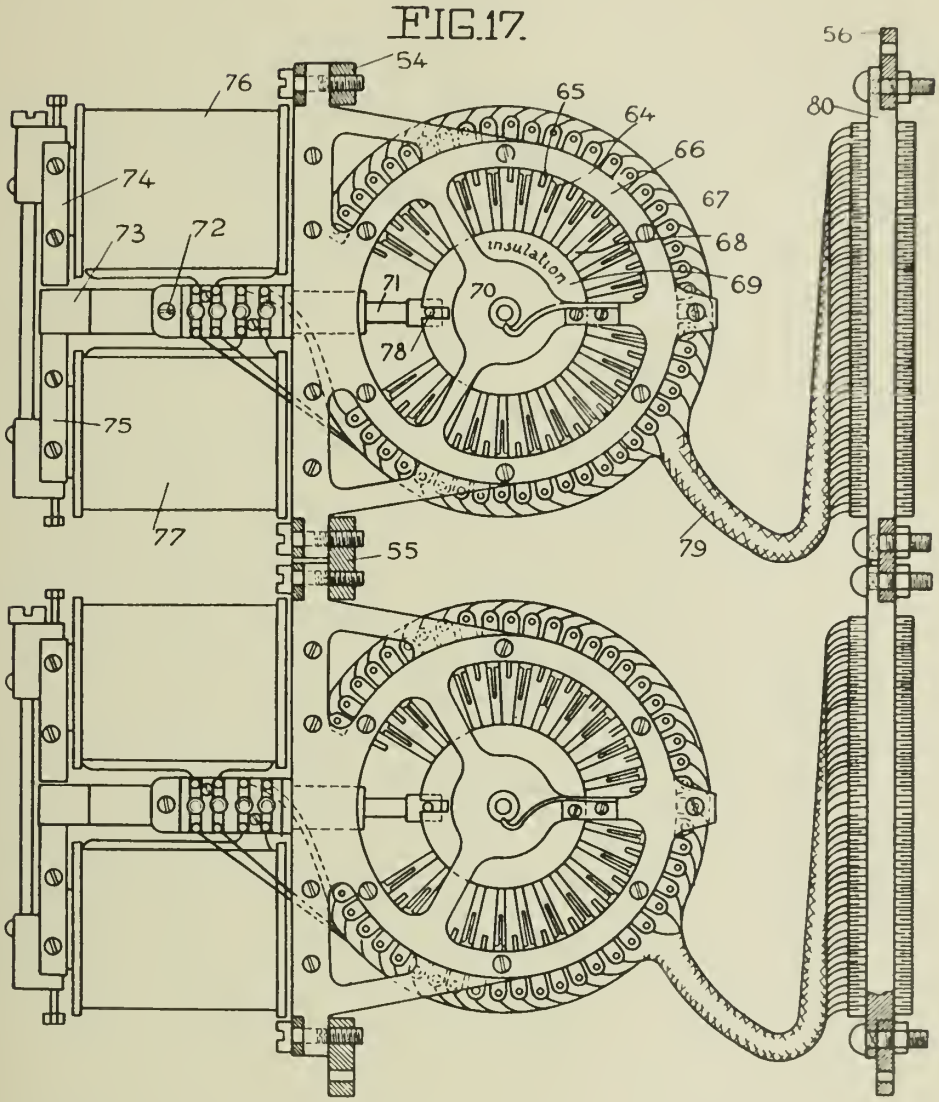

FIG.19. FIG.20.

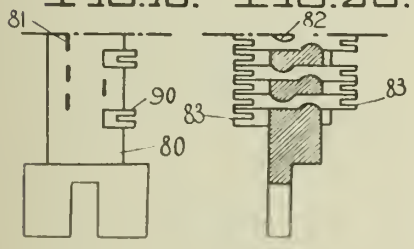

Fritz Mezger INVENTOR
BY
Young, Emery & Thompson
ATTORNEYS

PUBLISHED
MAY 25, 1943.
BY A. P. C.

F. MEZGER

ELECTRICAL CALCULATING APPARATUS

Filed April 21, 1939

Serial No.
269,265

17 Sheets-Sheet 16

FIG. 22.

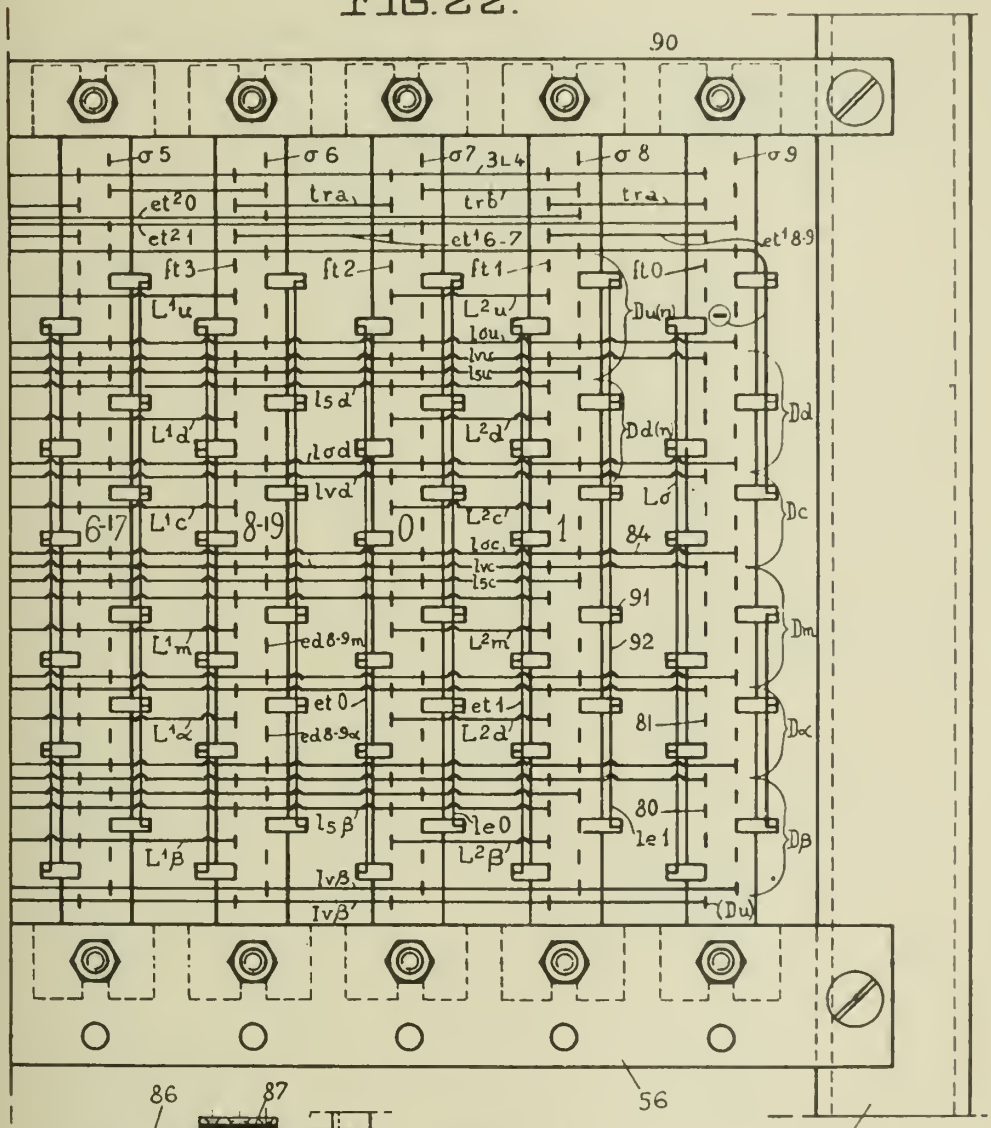

FIG. 21.

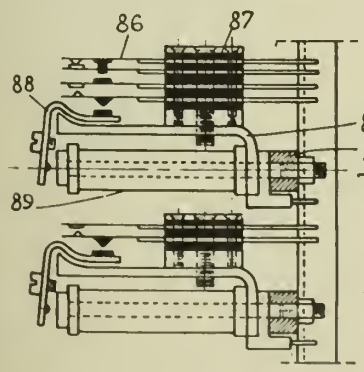

Fritz Mezger Inventor
By
Young, Emery & Thompson
Attorneys

PUBLISHED

MAY 25, 1943.

BY A. P. C.

F. MEZGER

ELECTRICAL CALCULATING APPARATUS

Filed April 21, 1939

Serial No. 269,265

17 Sheets-Sheet 17

FIG. 24.

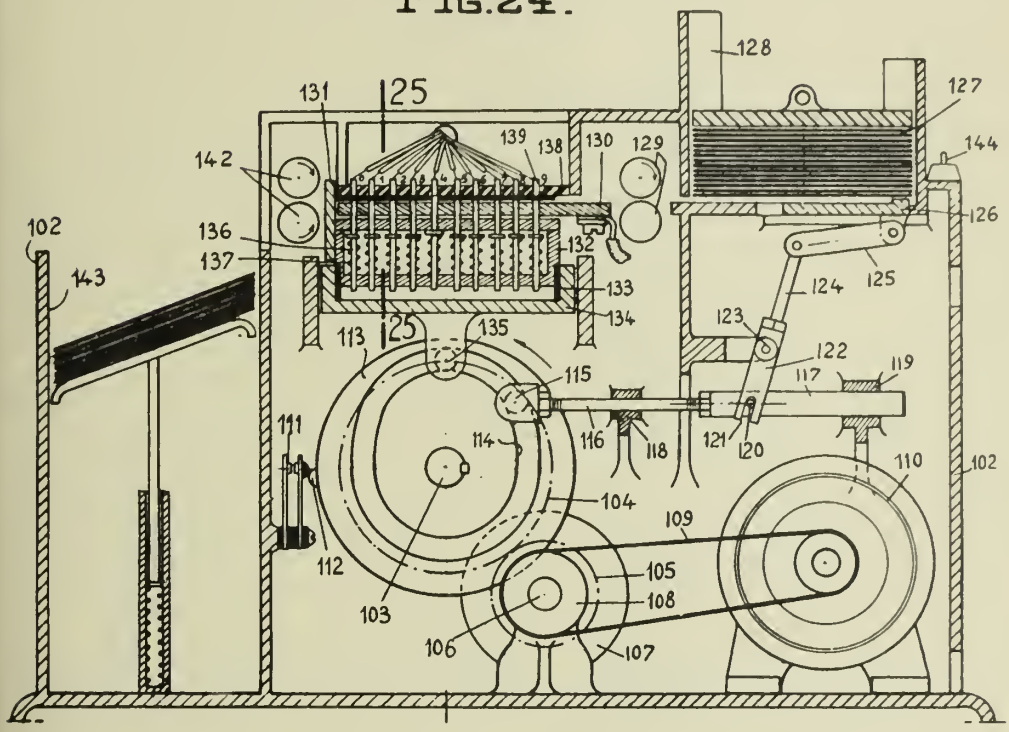

FIG. 23.

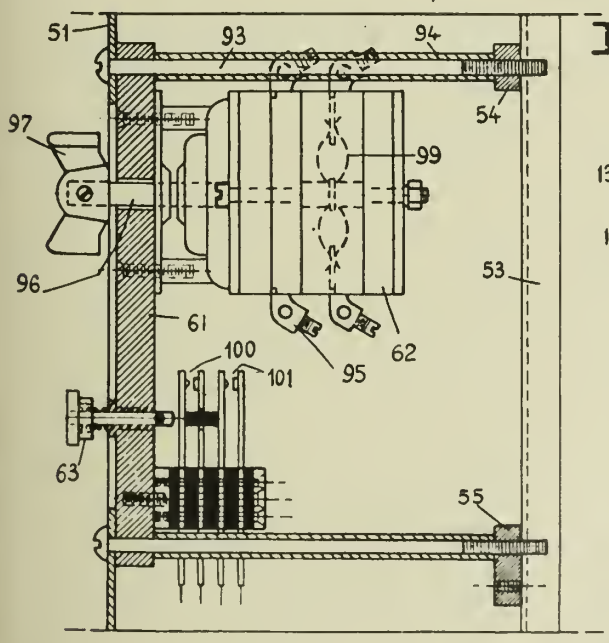

FIG. 25.

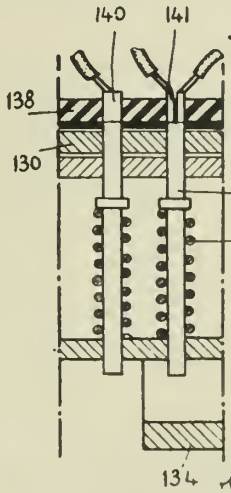

Fritz Mezger Inventor

By

Young, Emery & Thompson

Attorneys

Published May 25, 1943

Serial No. 271,343

ALIEN PROPERTY CUSTODIAN

PRODUCTION OF BODIES WHICH ABSORB GASES AND VAPORS

Georges François Jaubert, Paris, France; vested in the Alien Property Custodian

No Drawing. Application filed May 2, 1939

This invention relates to a process for the production of bodies which absorb gases and vapors and also to the bodies which are produced by this process.

The process according to this invention is more particularly applicable to halogenides in general and especially to alkaline, alkaline-earthy and earthy halogenides in order to render them porous, to increase their active surface as well as their absorbing power for certain gases and vapors such as steam, ammoniac gas, organic amines, pyridine, alkoholic and cetonic vapors and the like, while permitting of regenerating them by a simple heating process at a temperature of about 100° C.

The process according to the invention consists in incorporating with the said substances, after having brought them previously to a liquid or half-liquid condition by melting or dissolving them a porous armature formed of fragmentary pieces of fibrous materials having a slight density such as infusorial earth, light vegetal carbon, light magnesia, through an operation which is preferably made in vacuo in order to obtain after drying a mass having a larger absorption power and a slighter density than the pure and anhydrous halogenides from which it is obtained.

Both examples which will be given hereunder show the application of the process to the sole halogenides of calcium and lithium, but this process is also applicable in a similar manner to the halogenides of glucinium, sodium, potassium, strontium, barium, magnesium, aluminium, zinc and the like.

Example 1.—*Active porous chloride of calcium*

The hydrated chloride of calcium $CaCl^2+6H^2O$ melts, when heated, in its crystallisation water, then gradually looses the water which is contains, but it must be heated up to about 260° C. for removing the last molecule of water and obtaining a product which is completely anhydrous.

If the same anhydrous chloride is then further heated, it melts then in the red (at about 800°) and it is poured in this condition into metallic casks where it solidifies on cooling. Then it forms the molten chloride of calcium (density 2,26) which is found on the market and made on a large scale in the chemical industry.

The inventor has found that when chloride of calcium (in a solid condition or in solution or even in the form of anhydrous and molten chloride) is diluted with a small quantity of very porous bodies having a small specific weight such as infusorial earth (kieselguhr), light charcoal, light magnesia and the like, a mixture is obtained which can be dried, that is to say which can loose all the water which it contains through heating it in the open air at a temperature of only 85 to 100° C., i. e. at a temperature which in nearly three times lower than the temperature which is necessary for drying hydrated non-mixed chloride of calcium.

The porous product which is obtained (having an apparent density which is generally less than 0,50) is much more active, contrary to what might be supposed, than pure chloride of calcium; thus it absorbs steam, anhydrous ammoniac, the organic amines, the alkoholic or acetonic vapors much more strongly than pure anhydrous chloride of calcium.

For the production of the novel porous mixture the molten anhydrous chloride of calcium can be mixed at a high temperature with the diluent, which has been previously completely dried. It is also possible more conveniently to work in the cold through mixing the diluent with the hydrated chloride of calcium, i. e. either with a solution of chloride of calcium or with chloride of calcium which has been molten in its crystallisation water at a very low temperature. According to the chloride of calcium contents which it is desired to obtain in the finished product, an excess of solution of chloride of calcium with respect to the quantity of solid diluent is used or not used. Then the diluent is added, which can be infusorial earth, ordinary light vegetal carbon and the like.

At this moment, preferably but not necessarily, a vacuum is produced above the mixture in order to remove the air of the gases in the pores of the diluent as completely as possible, which causes the formation of an extensive foam. As soon as foam is forming only slightly the operation is stopped, i. e. the atmospheric pressure is restored, which forces the liquid to penetrate into all the pores of the diluent, then the solid product which has thus been impregnated in the cold with the excess of liquid is separated and this solid part is caused to dry in the open air at a temperature of 100° C. or, preferably, in a hot air stream at a temperature of the same order.

The following is a concrete example for the production of porous chloride of calcium having an apparent density of about 0,45. An excess (as, for instance, 10 to 12 liters) of a cold and rather concentrated solution of chloride of calcium having a density of 1,4 at a temperature of 15° C is used.

To this 1 kilog of light granulated charcoal in grains having the size of small peas (either a little larger or a little smaller) is added and completely impregnated.

Then a sufficiently far reaching industrial vacuum of 5 to 10 millimetres of mercury, for instance, is produced above the solution.

First a strong foam is formed, then this kind of boiling process gradually diminishes.

At this moment the vacuum is released and the mixture is filtered or poured off, or it is centrifugated or simply allowed to drop.

Then the solid residue, which is still moist, is brought into a vented drying chamber which is heated up to about 100° C or, preferably, into a hot air stream at a temperature of the same order.

After a few hours a dry product is obtained which has a weight of about 4 kilogs and contains 75% of anhydrous chloride of calcium and 25% of carbon. Its apparent density is about 0,45.

Of course, this chloride content may vary a little according to the character of the carbon which has been selected and to its porosity.

The above given figures apply to a light carbon such as fir, poplar or the like light charcoal. Similar results are obtained when carbon is substituted by infusorial earth (dynamite earth), light magnesia and the like.

It is also possible to use either more or less carbon or other diluent and a plurality of diluents can also be mixed together; finally very active porous mixture are always obtained the chloride contents of which varies, but which are completely dehydrated when heated in the air up to temperatures of the order of about 100° C.

EXAMPLE 2.—*Porous active chloride of lithium*

Proceed exactly as described above for the example 1 and according to the concentration of the solution of chloride of lithium which is used dry products of any concentration may be obtained.

Thus, with a solution of 50% and w
carbon products are obtained which con
of dry chloride of lithium and 50% o
With more diluted solutions or, on the
with more concentrated solutions and a
to the porosity of the diluent which is u
ished products of any desired concentr
obtained.

The commercial importance of such
and light halogenides can readily be c
for generally and almost in all their app
they are, when used as absorbents, mu
stronger than the pure anhydrous ha
from which they are derived and the d
which is much higher.

Furthermore, their production is less e
because of the low temperature at wh
possible to frce them from all the wat
they contain in order to convert them in
ly anhydrous products so as to give t
maximum activity.

Moreover, when such novel salts are
absorbents in their porous forms, wheth
or gaseous ammoniac or organic amines
holic vapors and the like are concern
possess the quite particular property t
can be regenerated at a very low tem
while restoring the said gases or vapo
the pure salts from which they are der
be regenerated only at a much higher
ture, which often causes a partial de
tion of the so regenerated products.

GEORGES FRANÇOIS JAU

Published May 25, 1943

Serial No. 271,524

ALIEN PROPERTY CUSTODIAN

CORING TOOL

Marcel Schlumberger, Paris, France; vested in the Alien Property Custodian

Application filed May 3, 1939

The present invention relates to coring devices, and more particularly to a new and improved coring tool for extracting a sample or core from a formation located beneath the surface of the earth. Formations of this character may include broadly those forming the side and bottom walls of a bore hole, and those forming the beds of lakes, seas, etc., for example.

More specifically, the invention relates to a new and improved coring tool of the projectile type, which is adapted to be projected into a formation by means of a special form of gun lowered to the level of the formation, for extracting a core therefrom.

Heretofore, a coring tool has been used which comprises a hollow member, usually tubular in shape, open at its front end and closed at the rear. Experience has shown that in some cases there are certain disadvantages in using a coring tool of this type. For example, when a coring tool of this character is projected through a fluid such as water, for example, it becomes filled with the fluid, thus reducing the amount of space available for receiving the core which is to be extracted from the formation.

A primary object of the invention, accordingly, is to provide a new and improved coring tool which may be projected through a fluid without any possibility of fluid being trapped in the tool, thus making the entire core receiving space in the tool available for the core extracted from the formation.

Another object of the invention is to provide a new and improved coring tool in which means is provided for permitting the escape of any fluid which may enter the tool after its discharge from the gun.

A further object of the invention is to provide a new and improved coring tool of the above character having a closure member which is adapted to be rendered ineffective by the pressure of the fluid through which it is projected.

A still further object of the invention is to provide a coring tool of the above character which forms a portion of the powder chamber for containing the charge used in projecting the tool into a formation.

In accordance with the invention, a coring tool is provided which comprises a hollow member, preferably tubular in shape, having a closure member therein which is secured against forward motion within the hollow member, but which is capable of being moved rearwardly out of the hollow member by the application of force. The forces developed by the explosion of the charge in the gun are directed against the rear face of the closure member, imparting the requisite high velocity to the tool. In several modifications, however, as soon as fluid enters the hollow member, a fluid pressure is exerted against the closure member, pushing it rearwardly out of the hollow member and allowing the fluid trapped therein to escape.

The closure member may be located at the rear end of the coring tool, or it may be disposed adjacent the forward portion of the tool, in which case the space behind it may be used as a portion of the powder chamber for containing the charge of powder, as described in detail hereinafter.

Additional objects will become apparent from the following detailed description of several embodiments, taken in conjunction with the accompanying drawings, in which:

Figure 1 is a view in vertical section of a coring tool constructed in accordance with the present invention, shown in firing position in a gun;

Figure 2 is a view in vertical section of a modification of the coring tool shown in Figure 1;

Figure 3 illustrates another embodiment of the invention;

Figure 4 illustrates a further modification in which apertures are provided in the coring tool to permit fluid trapped therein to escape;

Figure 5 is a view in vertical section of a modification in which the removable rear closure member is secured to the cable for withdrawing the tool from the formation;

Figure 6 illustrates another modification in which the coring tool constitutes a part of the powder chamber; and

Figure 7 shows a further modification of the device shown in Figure 6, in which a temporary front closure member is provided.

The core taking tool of this invention will be described in connection wtih bore hole practice for the sake of simplicity, although it may be used with equal facility to obtain cores from the bed of a lake or the sea, as will be apparent to those skilled in the art.

Considering Figure 1, a portion of a gun 10 of a well known type is shown adjacent the lateral wall 11 of a bore hole containing fluid, such as for example, the liquid or mud 12. Apparatus for raising and lowering the gun 10 in the bore hole is well known in the art and need not be described in detail.

Located within the gun 10 is a powder chamber 13 communicating with a laterally extending barrel portion 14 within which is disposed a coring tool 15 constructed in accordance with the

present invention. The coring tool 15 comprises a hollow open ended member 16, preferably tubular in shape, and having a rear closure member 17. The rear closure member 17 is provided with a sleeve portion 18 which is adapted to be tightly fitted within the hollow member 16.

An annular ring 19 of flexible material such as rubber, for example, is disposed between the rear closure member 17 and the rear edge of the hollow member 16, which is adapted to be compressed, as described hereinafter, to provide a fluid tight joint between the hollow member 16 and the barrel portion 14 of the gun. The coring tool 15 is adapted to be withdrawn from the formation 11 by means of the flexible cables 20 and 21, which are secured to the gun 10 at the points 22 and 23, respectively. The other ends of the cables 20 and 21 are connected to the plugs 24 and 25, respectively, which are secured within the apertures 26 and 27, respectively, formed in the forward portion of the hollow member 16.

As is disclosed in my prior patent No. 2,055,506, the flexible connections 20 and 21 between the coring tool 15 and the gun 10 enable the coring tool 15 and the core contained therein to be withdrawn from the formation 11 merely by raising the gun 10 to the surface of the earth in the well known manner.

Before the gun 10 is lowered into the bore hole, the flexible annular ring is placed upon the rear edge of the hollow member 16 and the rear closure member 17 is lightly pressed into position with its sleeve portion 18 inserted within the hollow member 16. The diameter of the hollow member 16, the flexible ring 19 and the rear closure member 17 are so chosen that a slight air space exists between the coring tool 15 and the barrel portion 14 of the gun 10 when the coring tool 15 is inserted into the barrel portion 14. This air space permits the escape of any air trapped behind the coring tool 15 as it is inserted into the barrel portion 14 of the gun 10.

When the flexible ring 19 and the rear closure member 17 have been placed in the proper position on the hollow member 16, as indicated above, the coring tool 15 is pushed into the barrel portion 14 of the gun 10 until the rear closure member 17 engages a small shoulder portion 28 adjacent the powder chamber 13. Then by applying additional force to the coring tool 15, the rear closure member 17 may be tightly driven into the hollow member 16, thus compressing the ring 19 of flexible material so that it increases its outer diameter to form a fluid tight seal.

The gun 10 may then be lowered into the bore hole to the level of the formation 11 from which it is desired to extract a core. When in the desired position, the charge of powder contained in the powder chamber 13 may be ignited in any known manner as, for example, by passing current from the surface of the earth through an insulated conductor 29 to a heater coil 30 in contact with the powder in the powder chamber 13. The forces developed by the explosion gases are directed against the rear closure member 17 so that the coring tool 15 is projected through the fluid 12 in which the gun 10 is immersed, into the formation 11 which is to be investigated.

As the coring tool 15 passes through the fluid 12, the fluid rushes into the hollow member 16, creating a relatively high fluid pressure against rear closure member 17. This fluid pressure acts to loosen the rear closure member 17 from the hollow member 16 so that its sleeve portion 18 is pushed out of the hollow member 16, permitting the fluid trapped therein to escape. Th tool 15 is now open at both its front a ends, so that any water entering the member 16 will be driven out through opening by the core collected therein as low member 16 penetrates the formation is to be investigated.

The gun 10 may then be raised to the of the earth in the usual manner, to w the coring tool 15 and the core containe from the formation 11 through the flexi nections 20 and 21 between the coring and the gun 10.

If desired, the annular ring 19 of flex terial may be inserted within a groove 18 in the rear closure member 17 as shown ure 2. Where this is done the ring 1 be made larger in diameter than the out eter of the hollow portion 16 of the co 15 in order to provide a fluid tight joint the coring tool 15 and the barrel porti the gun 10. In this modification, air i sarily compressed behind the rear closu ber 17 as the coring tool 15 is inserted wi barrel portion 14 of the gun 10.

Accordingly, it is necessary to provide means for retaining the coring tool 15 tion in the gun barrel against the pressu air compressed within the powder char Any known means may be used for this although it is preferred to coat the peri the rear closure member 17 with a suit hesive material, such as glue, for exa means of which the coring tool 15 ma tained in the firing position until the of powder in the powder chamber 13 is

In the modification illustrated in Fig composite rear closure member 31 is which comprises a disc 32 having a s formed thereon which is adapted to be fitted within the rear opening of the hollo ber 16. The disc 32 is provided with an rim 34 on which the flexible packing ri adapted to be placed. The flexible ri held in position by a rear plate 35 havin tral portion 36 which is adapted to extend an aperture 37 formed in the disc 32. of the central portion 36 is threaded to a nut 38 by means of which the rear may be tightened down on the flexible ri compress it between the disc 32 and t plate 35.

In this modification, the nut 38 is relea the diameter of the flexible ring 19 is tially equal to the diameter of the hollow 16 in order to provide an air space for pe the escape of air entrapped behind the tool 15 as it is inserted into the barrel 14 of the gun. The coring tool is pus the barrel portion 14 until the rear plat gages the shoulder portion 28 adjacent t der chamber 13.

At this point the nut 38 is tightened up press the flexible ring 19 between the and the rear plate 35. This causes the ring 19 to expand radially to form a flu fit for preventing the seepage of fluid f bore hole into the powder chamber 1 embodiment operates in exactly the same as the device disclosed in Figure 1, th composite rear closure member 31 being out of the hollow member 16 by the pre the fluid collected within the coring tool passes through the fluid 12 in which the is immersed.

As shown in Figure 4, a plurality of apertures 39 may be formed in the hollow member 16 in order to permit any fluid collected therein to escape. The apertures 39 aid in permitting the escape of fluid from the hollow member 16, and they also provide an emergency exit for the fluid in the event that the rear closure member 17 for any reason fails to become detached from the hollow member 16.

It will be noted that in the embodiments described above, after the rear closure member is removed from the hollow member 16 by the pressure of the fluid therein, it can not be recovered. However, if desired, it is possible to connect the rear closure member to the hollow member 16 so that it may be readily recovered after the coring tool 15 has been discharged into a formation, as shown in Figure 5.

Referring to Figure 5, a rear closure member 40 is provided, having a plug 41 formed thereon which is adapted to be tightly fitted within the hollow member 16. Within the plug 41 is formed a U-shaped passage 42 through which a flexible cable 43 is adapted to be threaded. The ends of the cable 43 may be passed through the apertures 24 and 25, respectively, formed in the forward portion of the hollow member 16 and they may be secured to the gun 10 as indicated in Figure 1.

The flexible cable 43 is made sufficiently long so that the rear closure member 40 will remain separated from the hollow member 16 after the coring tool 15 has been projected into the formation 11 in order to permit any fluid trapped in the hollow member to escape. When the gun is raised to the surface, however, the tension in the cable 43 will hold the rear closure member 40 tightly against the rear portion of the hollow member 16 so that it may be raised to the surface of the earth with the coring tool 15.

Where desired, the coring tool 15 may be utilized as a portion of the powder chamber within which the charge of powder is contained, as illustrated in Figures 6 and 7. This may be accomplished by providing a rear closure member which comprises a cup-shaped portion 44 (Fig. 6) which adapted to be tightly fitted within the hollow member 16, and an annular flange 45 forming a tubular enclosure 46 communicating with the powder chamber 13. In this modification the effective powder chamber comprises the powder chamber 13 and the tubular enclosure 46.

In the modification illustrated in Figure 7, a transverse partition 47 is provided which is adapted to be snugly received within the hollow portion 16. The partition 47 is adapted to bear against a shoulder 48 formed within the forward portion of the hollow member 16, which prevents the partition 47 from being moved forwardly within the hollow member 16. Tightly fitted on the front end of the hollow member 16 is a cap 49, the central portion 50 of which has been mechanically weakened, as for example, by providing a circular groove 51 therein to facilitate its being shorn off from the cap 49 by impact with the formation 11.

After the coring tool 15 has been discharged from the gun 10, the cap 49 prevents any fluid from entering the hollow member 16, so that the partition 47 remains in position while the coring tool 15 passes through the fluid 12 in the bore hole. Upon impact with the formation however, the mechanically weakened central portion 50 of the cap 49 is shorn off and is pushed rearwardly against the parition 47. As the hollow member 16 penetrates the formation 11 the core contained therein pushes both the shorn off central portion 50 of the cap 49 and the partition 47 rearwardly out of the hollow member 16.

It will be evident that this last embodiment enables a considerable portion of the entire volume of the coring tool 15 to be utilized as a portion of the powder chamber of the gun 10. Accordingly, where this type of coring tool is used, the size of the powder chamber 13 may be considerably reduced without producing any substantial reduction in the magnitude of the force exerted in projecting the tool 15 into a formation. In some cases it may be dispensed with entirely, in which case the charge of powder would be disposed behind the partition 47 in the hollow member 16. This feature is of great importance in bore holes where there are definite limitations upon the size of the gun that can be used.

From the foregoing, it will be apparent that the invention enables cores to be readily and effectively extracted from formations in those cases where the coring tool is discharged from a gun immersed in a fluid, such as water, or mud. Furthermore, where the gun is not immersed in water, the partition in the hollow member will be moved rearwardly out of the hollow member in a similar manner by the pressure of the surrounding air through which the tool is projected, permitting any entrapped air to escape, and enabling the entire volume of the hollow member to be utilized for receiving the core.

Moreover, by using a detachable transverse partition in the coring tool, the coring tool may be utilized as a portion of the powder chamber, thus enabling the size of the powder chamber located within the gun to be substantially reduced.

As indicated above, it is to be clearly understood that the present invention is not to be limited to the extraction of cores from the lateral or bottom walls of bore holes. It will be evident that the coring tool can be used with equal facility for extracting cores from formations located beneath bodies of water, such as the beds of lakes, or seas, for example, and it is to be understood that all such uses are to be comprehended within the scope of the invention.

MARCEL SCHLUMBERGER.

PUBLISHED

MAY 25, 1943.

BY A. P. C.

M. SCHLUMBERGER

CORING TOOL

Filed May 3, 1939

Serial No.
271,524

Fig. 1

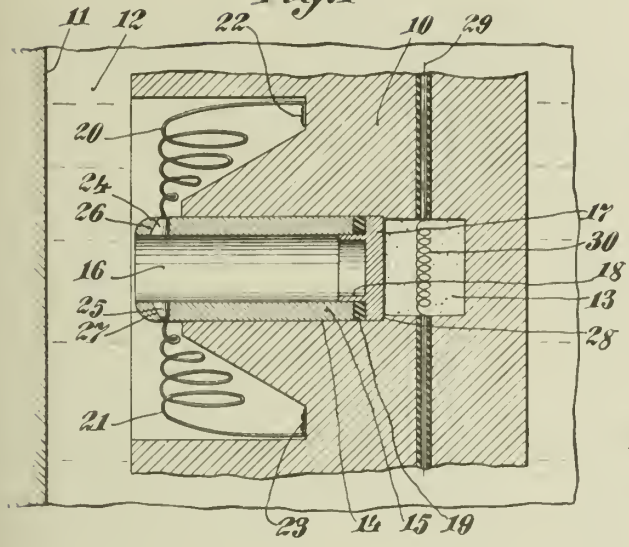

Fig. 2

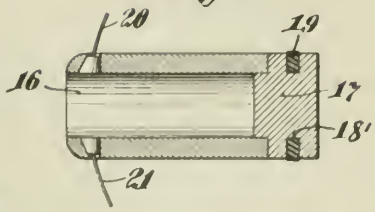

Fig. 3

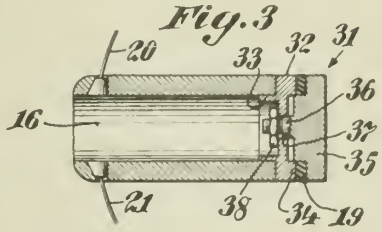

Fig. 6

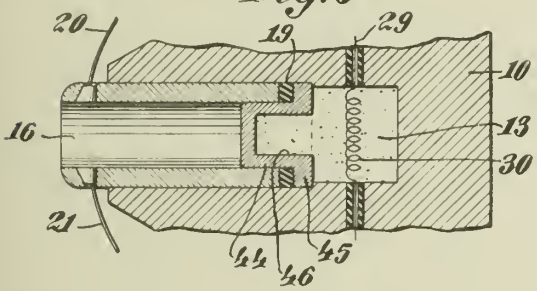

Fig. 4

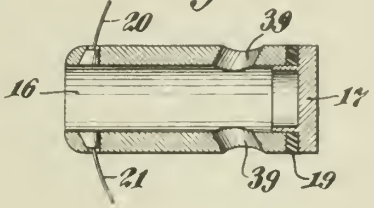

Fig. 7

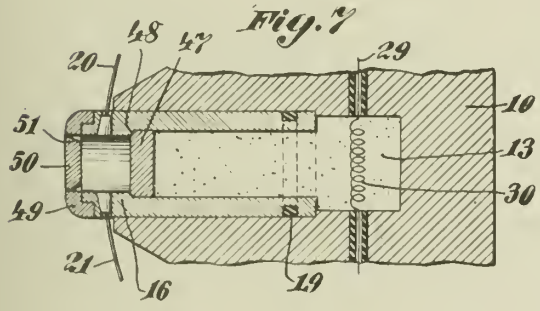

Fig. 5

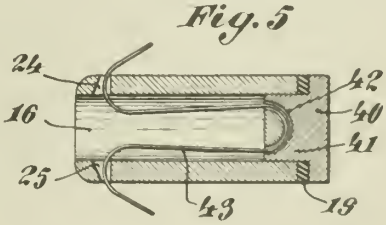

INVENTOR.
Marcel Schlumberger.

BY *Hoguet, Neary & Campbell*
ATTORNEYS

Published May 25, 1943

Serial No. 272,042

ALIEN PROPERTY CUSTODIAN

AIRCRAFT CONTROL

Henrich Focke, Bremen, Germany; vested in the Alien Property Custodian

Application filed May 5, 1939

This invention comprises improvements relating to the control of rotating wing aircraft of the helicopter or autogiro type.

It is an object of the present invention to provide for improved lateral control of aircraft of this class comprising side by side rotors.

A particular object of the invention is to provide a control system of aircraft of this class which is very simple in construction and permits a vertical and lateral control by common constructional elements of the control mechanism.

A still further object of the invention is to provide a combined vertical and lateral control with a design of aircraft in which the rotors or their shafts, respectively, are mounted for rotation about non-tiltable or stationary, more particularly, vertical actual axes.

With these and further objects in view, which will be apparent from the within disclosure, the blades of the two rotors are mounted for independent adjustment of the angle of incidence and a special mechanism is provided for adjusting the angle of incidence of each of the blades periodically to thereby effect forward or rearward tilting of the virtual axes of the two rotors without tilting the actual axes thereof. As is known, tilting of the virtual axis of an air screw can be effected by tilting the normals to the planes of rotation of the blades, i. e., by periodical variation of the angles of incidence. Now, means are provided for effecting elevational control by producing identical forward or rearward tilting of the virtual axes of both rotors, while further means are provided for producing opposite, fore and aft tilting of the virtual axes of the two rotors, by actuation of a lateral control element in the aircraft. Thus, in case of actuation of the lateral control element, the effects neutralize each other as regards vertical control but not as regards turning about the vertical axis. In effect, the forwardly inclined virtual rotor axis on one side produces an acceleration on this side whilst the rearwardly inclined virtual rotor-axis on the other side produces a retardation on that side, so that the desired lateral control is effected.

The invention will be better understood by reference to the following detailed description in connection with the accompanying drawing showing one embodiment of a control arrangement in accordance with the invention, viz—

Fig. 1 is a fragmentary, perspective, diagrammatic view of a control system having the invention applied thereto.

Fig. 2 is a diagram for illustrating the operation of the system. The arrow indicates the travelling direction of the aircraft.

For the sake of simplicity, only one blade of one rotor, the left hand rotor, is illustrated, with the main parts of the control system for both rotors.

Each blade suitably is mounted after the customary manner by a cross beam q^1 in a forked sleeve q^2 mounted by flapping joints q^3 on a bearing or hub member q^4 which is rigidly carried at q^5 by the rotor shaft (not shown). Only so much of the member q^4 is shown as is sufficient to illustrate the mounting of the one blade q, other parts of this member being broken away. The control stick a is swingably mounted about an axis A—A which is stationary in the aircraft by means of a forked holder b which is fixedly secured on the control stick a, between the upper part c and the lower part c' of a rocker which is rotatable about the stick a and has three sets of arms to which the control cables are connected as shown. The cable fg is passed over the guide rollers shown and taken around a pulley k associated with the left-hand rotor. The cable hi is similarly passed over guide rollers and taken around a pulley associated with the right-hand rotor which is not shown. Of course, the upper and lower parts c and c' of the rocker are interconnected for common rotation about the stick, by means which are not shown.

The pulleys such as k have screw threaded spindles l working in fixed nut parts m and the cable lengths h and f are connected with respective pulleys in such a manner that, upon pushing the stick a forward, and thereby pulling on the cable lengths h and f, the latter turn the pulleys in the direction for causing the screw threaded spindles l to descend in the nut parts m. By this means, a ring or bearing member n which is mounted for tilting about a stationary axis in the aircraft, and connected with the associated spindle l, by a rod s, is tilted and a further ring or bearing member n' mounted for rotation in or on, and tilting movement with, the bearing member n is thus also tilted. In the drawing, the bearing members n and n' are the outer and inner race rings, respectively, of a ball bearing. It will thus be understood, that the rods o linked to the inner race ring n' rise and fall periodically during each revolution of the hub q^4 and in this fashion periodically vary in turn the angles of incidence of the blades q, each through a lever p fast on the cross bar q^1 of the respective blade. In order to permit such action of the parts, and especially swinging of the cross bar about the

flap joints q^3, the axis of said flap joints is arranged to go through the plane in which the lever p swings. Moreover, a certain play or an additional joint (not shown) is provided between the parts o, p, q^1, in order to permit the requisite small swinging movements of the blade about the pivot q^3. Larger swing movements of the blade about this pivot are rendered impossible by a supporting mechanism defining the lowest position of the blade in case of decreasing centrifugal action thereof. For the sake of clearness, this supporting mechanism which has been described in my copending application Ser. No. 191,329 and does not form part of the present invention, has not been shown. Also, for the same reason, a joint which may be advantageously provided in order to permit lateral movements of the blade with respect to the hub member q^4 or forked sleeve q^2, respectively, has been omitted.

In the instance illustrated, the ring n is tilted forwardly, and the angle of incidence of the forwardly located blade is reduced whilst that of the rearwardly located blade is increased. This has the effect of depressing the nose of the aircraft. As will be apparent, the reverse effect is produced by pulling the stick a backwards and thereby pulling on the cable lengths i and g for turning the pulleys k in the opposite direction.

Right-hand and left-hand arms of a rudder bar or cross head e are connected by cable lengths r with respective right and left hand arms d of the rocker c. If the rudder bar e is operated, as for example to produce right-hand rudder effect, the rocker c is turned about the stick a by the pull of the appropriate cable length r and the cable f, g of the left-hand rotor is operated in a direction which, in accordance with what has been said above, leads to a variation of the angle of incidence of the blades of the left hand rotor producing a forward inclination of th axis L_V (Fig. 2) of the left hand rotor actual axis L_A thereof remains unchan the same time, however, the cables i, right hand rotor are actuated in the direction, and the blades of that rotor e a variation of the angle of incidence wh ducs a rearward inclination of the vir R_V (Fig. 2) of the right hand rotor, i. e a manner that the angle alpha between R and the vertical or actual axis R_a is as the oppositely directed angle alpha the virtual axis L of the left hand rotor vertical or actual axis R_a. As a result the left hand side of the aircraft is ac and the right hand side is retarded, wh aircraft is caused to make a right h about the vertical axis V—V, without rotation of the aircraft with respect to zontal or longitudinal axis H—H of the In order to cause a left hand turn of craft, the cross head e and the parts c thereto are operated in an opposite sens

The superimposing of vertical and lat trols can be appropriately effected by ot matic means and it is to be understood mechanisms illustrated in the drawing examples of such means.

It has been found that the lateral co tem according to the invention in which tual axes of the rotors are oppositely til the actual axes of the rotors remain st offers considerable practical and aerod advantages over systems in which the ac are tilted.

This is a continuation in part of my tion Serial No. 191,328, entitled: "Airc trols."

HENRICH F

PUBLISHED

MAY 25, 1943.

BY A. P. C.

H. FOCKE

AIRCRAFT CONTROL

Filed May 5, 1939

Serial No.
272,042

Fig. 1

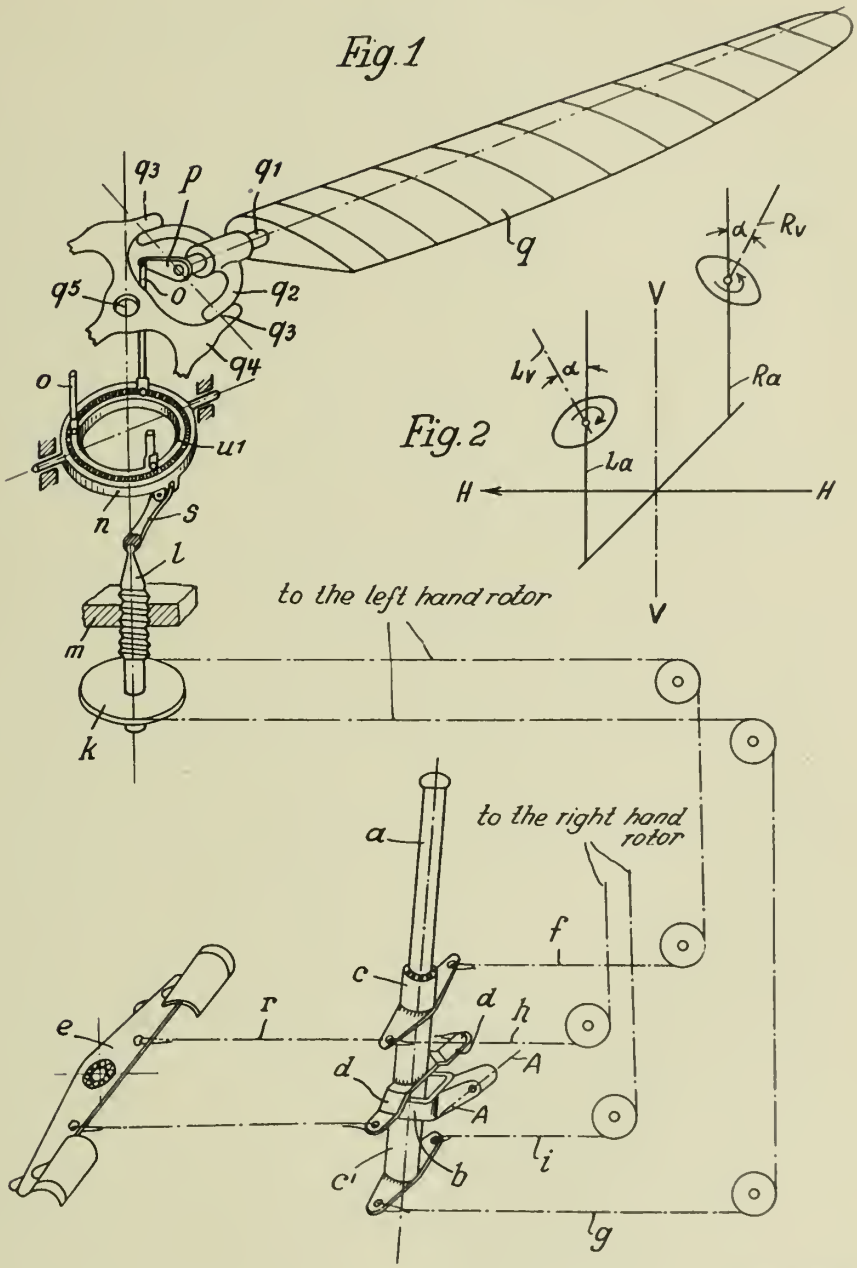

Inventor:
Henrich Focke
By
Watson, Cole, Grindle & Watson
Attys

Published May 25, 1943

Serial No. 272,073

ALIEN PROPERTY CUSTODIAN

ELECTRONIC SCANNING DEVICES FOR TELEVISION

André Paul Paumier, Sceaux, France; vested in the Alien Property Custodian

Application filed May 6, 1939

It is known that the electronic scanning devices used for television by the name of "iconoscopes" generally have the defect of superposing on the picture modulation a secondary modulation which causes the appearance of dark patches of more or less large area, called "marks". It appears to be acknowledged that these marks originate from secondary emission phenomena which occur in the "iconoscope", and that spatial distribution is connected with the manner in which the photo-electric mosaic plate is scanned with the cathode-ray scanning beam. Various methods have hither to been proposed for compensating or "correcting" the marks in question, starting in general from a development of the "secondary modulation" function in MacLaurin's progression which is stopped at its second or third term, and experimentally adjusting the numerical values and the phases of the t and t^2 terms, t representing the time, which are produced by appropriate generators.

This correction requires accurate adjustments which have to be re-adjusted from time to time, and only gives partially satisfactory results. The present invention relates to a method of correction which is quite different and the success of which has been proved by experience. It essentially consists in the use of a magnetic correcting field of relatively small amplitude, the action of which may be assumed to be exerted on the very soft secondary electrons which cause the marks as has been suggested. The direction of said magnetic field has to be substantially parallel with the cathode-ray beam of the "iconoscope" and inclined relatively to the surface of the scanning screen.

These conditions are set forth in detail in the ensuing description taken with reference to the accompanying drawing which shows by way of example an embodiment of a device according to the invention.

In the drawing, a scanning tube called "iconoscope" is shown. Said tube 1, the actual construction of which is not a part of the invention, essentially comprises a screen 2 and a cathode-ray oscillograph 3. The screen 2 is formed by a metal collecting plate which is separated from a mosaic of photo-electric elements by an insulating plate. On said screen is projected the image to be scanned 4 by means of an optical system 5. The oscillograph essentially comprises a cathode 6, a grid 7, a first anode 8 and a second anode 9, and also means 10 for causing the cathode-ray beam to deviate in two directions at right angles, so as to scan the screen 2. It is of course understood that this description of the tube 1 is only given by way of example in order to illustrate the present invention and as a reference to the arrangement of the tubes called "iconoscopes" to which the present invention relates.

Experience has shown that by modifying a continuous magnetic field, for example by means of a coil surrounding the head of the iconoscope, it was possible to compensate more or less the marks of the picture of which mention was made above. The compensating action is complete for a direction of the field that makes an angle of about 45° with the plane of the mosaic plate, or approximately parallel with the axis of the cathode-ray oscillograph; this compensation becomes zero for a field parallel with the plane of the mosaic plate. Finally it is only exerted on values of the brilliance of the picture which are not too high; in fact, when said brilliance increases, the intensity of the compensating field has to be increased, and this quickly leads to values which interfere with the scanning of the mosaic plate.

By way of a non-limitative example, for an "iconoscope" wherein the accelerating voltage of the scanning beam was of the order of 1,000 V. and for a picture illumination of between 15 and 150 Lux, a compensating field of the order of 1 Gauss proved satisfactory. Said field may be created by a coil 11 which is suitably arranged about the iconoscope and is supplied by a device 12 which supplies it with the necessary current.

Satisfactory results are also obtained with an alternating magnetic field of appropriate form and frequency, or with a field which is a discontinuous function of the time, for example which is of suitable intensity at certain instants or during certain very short intervals, and is zero outside said intervals, the frequency of the field being in this case preferably connected to the periodicity of the scanning, for example by controlling the device 12 by means of the same source of frequency which control the scanning device 10.

ANDRÉ PAUL PAUMIER.

PUBLISHED

MAY 25, 1943.

BY A. P. C.

A. P. PAUMIER
ELECTRONIC SCANNING DEVICES
FOR TELEVISION
Filed May 6, 1939

Serial No.
272,073

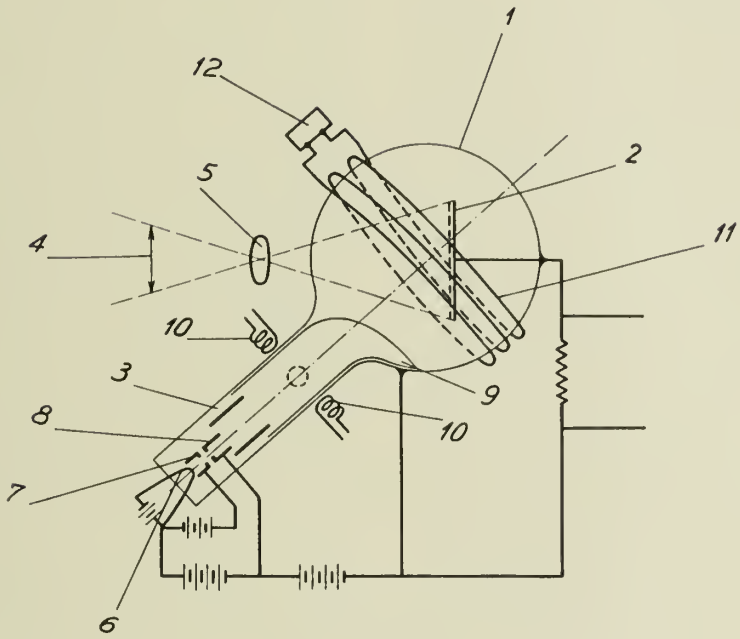

André Paul Paumier
INVENTOR
By [illegible]
his ATTY.

Published May 25, 1943

Serial No. 272,668

ALIEN PROPERTY CUSTODIAN

SOUND RECORD MATERIAL

Karl Daniel, Koln-Sulz, Germany; vested in the Alien Property Custodian

Application filed May 9, 1939

The invention relates to a material serving for the mechanical recording of sounds and consisting of a carrier layer provided on one or both sides with a sound recording layer.

The known bands for mechanical sound recordings consist of a colorless carrier layer for example of normal film material which is provided on one or both sides with a sound recording layer, also colorless and consisting for example of gelatine or the like. On cutting the sound grooves in such a sound recording material, the depth of the cut is very difficult to observe and it can easily happen that in consequence of an erroneous adjustment of the recording needle or for some other reason the sound grooves are cut not only in the sound recording layer but also in the carrier layer underneath, which is undesirable for numerous reasons.

One of the principal purposes of the invention is to obviate this defect. This is attained by the carrier layer and the sound recording layer or layers being colored differently. By the color of the shaving produced in the cutting of the sound grooves, it is then easy to see whether the sound track cut is of the regulation depth or whether this depth is too great, which can be recognized by the shaving showing the color of the carrier layer. Experience has shown that even the slightest penetration of the needle in the carrier layer is sufficient to materially alter the color of the shaving.

The sound recording material can for example be made by the sound record layer consisting of gelatine or the like being colorless in the usual way, whilst the carrier layer underneath is colored blue, red, green or otherwise. If the sound grooves are cut to regulation depth, then there is produced an entirely colorless shaving, whilst if the depth of cutting is too great so that the sound groove is also cut in the carrier layer, the shaving becomes at once colored according to the color of the carrier layer.

In certain cases, it is advisable to color adjacent layers with complementary colors so that when the depth of cutting of the sound groove is too great, the shaving is given two diametrically opposite colors. Using miscible colours for the adjacent layers, the depth of cut at the time can be easily seen from the mixed color seen in transparency.

The invention furthermore provides for subdividing the individual sound recording layer into differently colored layers. This has the advantage that the shaving even before reaching a depth of cut at which the carrier layer is made to suffer, assumes a different color, thus giving a warning against cutting the sound groove still deeper.

A sound recording material according to the invention is shown by two examples in the annexed drawings.

Figure 1 shows a sound record band of a central carrier layer 1 on both sides of which is applied a sound recording layer 2 or 3. The carrier layer 1 is of a different color to the sound recording layers 2 and 3. The sound recording layers 2 and 3 can be, for example, colorless, whilst the carrier layer is colored for example blue, green or red. All three layers can, however, be made colored and a different color is given to the separate layers thus, for example, the color red to the layer 1, and the color green to the layers 2 and 3; naturally, the color of the layers 2 and 3 may also differ with each.

If in such a sound record band sound grooves or tracks 4 are cut to the prescribed depth, that is, in such manner that the sound grooves are entirely in the sound recording layer, then the shaving taken out has only the color of the sound recording layer. If the cutting of the sound tracks is, on the contrary, too deep, as is shown by way of example at 5, so that the sound track lies not only in the sound recording layer but also extends into the carrier layer, then the shaving taken off assumes the color of the carrier layer and consequently indicates automatically the faulty adjustment of the depth of cut.

In particular with bands with a sound recording layer applied on one side of the carrier layer, on coloring the two layers with miscible colors, for example a blue and a yellow which together give green, by viewing the mixed color the depth of cut of the sound tracks may be easily found.

With the sound record band of Figure 2, the sound recording layer applied on to the carrier layer 1 is subdivided into two layers 7 and 8 having different colors from each other; the layer 8 is here preferably comparatively thin. If in such a band sound grooves are cut having the regulation depth, then these grooves are entirely in the layer 7, so that the shaving has only the color of this layer. If for any reasons the depth of cut increases so that there is a danger of the sound grooves reaching the carrier layer 1, the shaving assumes also the color of the layer 8 and thus shows the danger which threatens the carrier layer. A regulation sound track is shown at 9; the sound track shown at 10 is also of regulation depth as it is entirely in the sound recording layer 6. It projects, however, into the layer 8 so that the shaving is of a different color to the shaving of the groove 9. This change of color is a signal that the depth of cut must not be made deeper.

The invention is naturally not restricted to the examples described and shown but numerous modifications may be made without departing from the invention.

KARL DANIEL.

PUBLISHED

MAY 25, 1943.

BY A. P. C.

K. DANIEL

SOUND RECORD MATERIAL

Filed May 9, 1939

Serial No.
272,668

Fig. 1

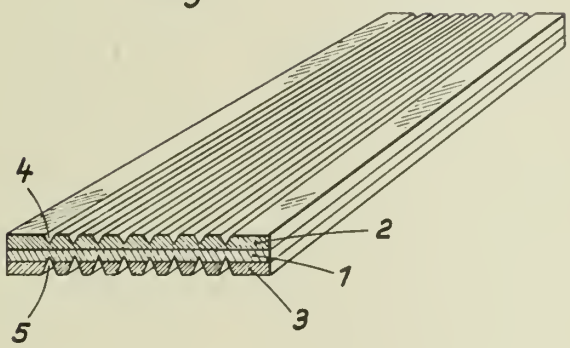

Fig. 2

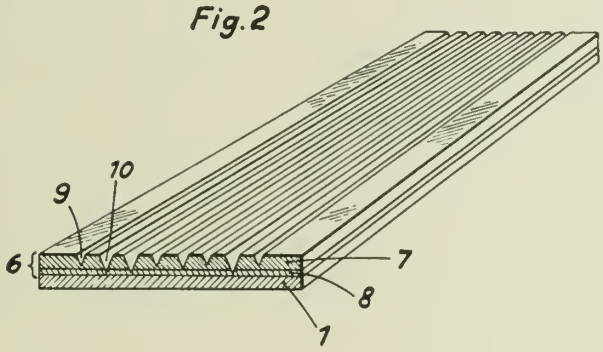

Inventor:
Karl Daniel
By: Mason & Porter
Attorneys

Published May 25, 1943

Serial No. 274,068

ALIEN PROPERTY CUSTODIAN

PROCESS FOR REFINING AND IMPROVING FATS AND SIMULTANEOUSLY SEPARATING THE ACCOMPANYING SUBSTANCES THEREFROM

Hans Paul Kaufmann, Munster, Germany; vested in the Alien Property Custodian

No Drawing. Application filed May 16, 1939

The invention relates to a process for refining fats in which valuable accompanying substances may be recovered and employed again.

As is known, natural fats contain in addition to the fatty acid glycerides, colouring substances, phosphatides, vitamins mucous substances and the like. Only in isolated cases, for example in the production of lecithin from soya beans, are these accompanying substances technically utilised to some extent. In most refining and bleaching methods, the accompanying substances are lost. Recent research has shown that such compounds are valuable as "accessory" nutritive substances, for example vitamins and hormones. Moreover, their presence may delay the deterioration of the fats, so that they are natural protective substances.

The refining of fats by the hitherto usual methods therefore cannot always be regarded as expedient. However, there are cases in which the removal of the aforesaid accompanying substances is necessary. This applies, for example, to the hardening of the fats for the purpose of sparing the catalyst. Moreover, the accompanying substances are frequently involuntarily removed together with free acids, products of decomposition and the like. In the case of deteriorated fats, the main value must be placed on the removal of disturbing odorous or flavouring substances. The present process consists in refining fats in such a manner, that the accessory accompanying substances are removed in a sparing manner in order that they may again be utilised and if necessary again added to the starting material, either directly or after hardening thereof. Furthermore, when carried out in a certain manner it may also serve for recovering secondarily formed compounds, for example products of decomposition.

The "chromatographic adsorption analysis" permits of separating the colouring substances, sterins and the like by reason of the affinity thereof for certain substances active in lowering surface tension (alumina, carbon, bleaching earths, calcium carbonate and the like). However, this method has hitherto only been of value for purposes of analysis and dissection, although it has already been known for many years. Whenever fats were used for such scientific experiments one was not interested in the fats as such. The present process is based on the fact that adsorption phenomena of this type may also be utilised for the technical refining of fats with the simultaneous removal and further use of the accompanying substances.

The use of substances active in lowering surface tension for the purpose of binding colouring substances, mucous substances and the like is known per se in the technical working up of fat. For this purpose, a large amount of fat is taken to a small quantity of adsorption medium, thorough stirring is carried out and the adsorption is assisted by heating. Adsorption media are particularly popular which can set up chemical reactions by preliminary treatment, for example by small adhering quantities of acids and acid substances or substances having a coagulating action. The adsorbate is in such cases subjected to a more or less extensive decomposition, which can be recognised by the dark colouring of the used-up refining medium.

In the present process, the fat to be treated comes into contact with much larger quantities of the adsorption medium. It is passed, either undissolved or dissolved in solvents, continuously or discontinuously through the adsorption medium, chemical modifications being avoided. The flow of the fat or of its solution may be accelerated by vacuum or pressure. If substances sensitive to air are present, the process may be carried out in the presence of inert gases. Benzine, trichloroethylene and benzene may, for example, be employed as solvents for the fats. The adsorption takes place in dependence upon the surface forces of the accompanying substances to be removed. It is known from the "chromatogrammes" employed for analytical purposes that colouring substances have a very considerable affinity for adsorbents. This is true, for example, of the physiologically active substances of the nature of vitamin A which accompany fats.

It is not difficult to dissolve out the adsorbate from the adsorption medium. For this purpose, suitable solvents are employed. If solutions of the fats are subjected to adsorption, the same solvents may be employed. A change of solvents frequently brings about the desired result more rapidly. After dissolving out, the adsorption medium is available for further use, until it must finally be reactivated by special methods.

The treatment described is very sparing and entails no losses. The fats are obtained in a very pure form and the accessory accompanying substances retain their activity. They may be separately employed, for example, for therapeutical or dietetical purposes, or they may again be added to the fat after any desired conversion thereof, for example after hardening for the production of margarine. If they are rendered impure, for example by disturbing flavouring and

odorous substances, as in the case of rancid fats, purification is previously carried out, for example removal of aldehydes by disulphite solution, if the deterioration of the fat in question has not advanced too far.

In an earlier application I have described a process in which fats and fatty acids of any desired nature or mixtures thereof are separated in a similar manner. It may therefore occur that in the adsorption of the accompanying substances the actual fat constituents are also taken up, for example that fatty acids are adsorbed together with accompanying substances of the fats. However, it is also possible here to obtain satisfactory results by suitable selection of the adsorbent, the quantity thereof, the temperature and if necessary the solvents. The selective adsorption of the glycerides of the fatty acids is the most difficult to effect. Therefore, it is simple to free a neutral fat from the accompanying substances by the process according to the present application. It is generally also immaterial in the further use of the accompanying substances whether they still contain a part of the fat or glyceride fractions thereof.

If it is desired to free solutions of the fats from accompanying substances and if the former are isolated by extraction, the miscellany may be directly employed in the meaning of the present process. They are first made to flow through smaller quantities of the adsorbent for the purpose of removing suspended substances, and batteries of adsorption devices are then connected preferably in towers. The free acids and the like may then also be removed in addition to the accompanying substances. While, for example, the solvent has hitherto first been removed in the production of soya oil, the accompanying substances have been coagulated by water vapour and the lecithin thus produced has been employed for the manufacture of margarine, in the present process the phosphatides and the like are adsorbed from the miscellany and are dissolved out of the adsorbent. In the case of oils containing valuable curative substances, this sparing enrichment is particularly desirable, for example in the case of train oils.

The manner in which the process is carried out will be readily understood from the foregoing description. For example, crude linseed oil is made to flow slowly through coarsely granulated aluminium oxide which is situated in an adsorption tower. The filtrate is practically free from colouring substances and other accompanying substances. The oil still present in the adsorption medium may be dissolved out with a solvent and contains the accompanyi stances in strongly enriched form afte moval of this solvent. If solutions of employed, the adsorption medium may carefully treated with the same solven pure state and the greater part of the removed. Not until then are the adsor stituents dissolved out.

It is also possible to combine the prese ess in various manners with known refi improving methods.

The known adsorbents, such as bleaching earths, carbon, gypsum, calci bonate, magnesium oxide, fibrous clay a inorganic or organic substances may be e in the process according to the inventio

Examples

1. A whale oil, the vitamin A content is shown by a strongly blue Carr-Price is filtered through granulated silica gel. vitamin A can be traced in the filtrate, considerable improvement in smell car served therein.

2. Lagos palm oil is dissolved in 5.0 carbon disulphide and the solution is sl tered through 5 parts of fuller's eart washing operations are then carried o with 5 parts of carbon disulphide. Pr all the fat passes into the filtrate and behind with a light yellow colour after of the solvent by distillation. The acid extracted with acetone and a deep red so the majority of carotenes is obtained.

A soya miscellany can be worked up to and sterins by adsorption. Both are fixe sorption. Experiments with pure lecith that it is particularly well adsorbed from solution. The miscellany employed con benzine having the boiling point 70° a tained about 30% oil. The final poin adsorption of lecithin is best recognised fact that the filtrate with acetone added becomes turbid as soon as lecithin is form latter is well adsorbed by silica gel, alu oxide, fuller's earth and the like. Calc ticum, calcium citricum and magnesiu may also be employed. Thus, 3 parts of sium oxide may take up about 0.25 part thin under suitable conditions. The a miscellany yielded about 1% lecithin an to the adsorbent.

HANS PAUL KAUFM

Published May 25, 1943 Serial No. 274,067

ALIEN PROPERTY CUSTODIAN

PROCESS FOR FRACTIONATING MIXTURES OF FATTY ACIDS AND/OR ESTERS OF FATTY ACIDS

Hans Paul Kaufmann, Munster, Germany; vested in the Alien Property Custodian

No Drawing. Application filed May 16, 1939

Substances active in lowering surface tension have long been employed in the refining and improvement of fatty acids and their esters for the purpose of eliminating undesirable accompanying substances, such as coloring substances, glue, albumin, soaps and the like. In this treatment of fatty acids and fats with substances acting in lowering surface tension, such as carbon, bleaching earths, silica gel and the like, large quantities of fatty substances have hitherto always been treated with small quantities of substances active in lowering surface tension.

It has been found that it is also possible to fractionate mixtures of fatty acids or esters of fatty acids by subjecting these mixtures to a selective adsorption process. According to the invention, the mixtures of fatty acids or their esters are treated for this purpose with large quantities of substances active in lowering surface tension which may amount to a multiple of the quantity of fatty substances. The fatty substances are preferably made to flow through a thick layer of substances active in lowering surface tension, because it has been found that if the substances active in lowering surface tension are suitably selected, the individual fatty acids and their esters, that is to say, esters containing alcohols of low molecular value, for example methyl alcohol, ethyl alcohol, propyl alcohol, glycol or glycerine, are of different adsorbability.

In this respect, saturated and unsaturated, hydroxylated and non-hydroxylated acids and the like of high and low molecular value and their esters differ from one another. Thus, the selective adsorption according to the invention may serve for fractionating mixtures of fatty acids, mixtures of esters thereof or mixtures containing both classes of substances. It is based upon the fine adjustment of the differences, even if sometimes very small, in the affinity with respect to the adsorbents employed. Mixtures containing derivatives of fatty acids such as oxy-acids, keto-acids, polymerised acids, estolides and the like, or mixtures of fatty acids or derivative thereof and esters of the fatty acids with alcohols of low molecular value, or mixtures of different esters of the fatty acids with alcohols of low molecular value, may also be treated and fractionated by the process according to the invention.

The practical application of this process to mixtures of fatty acids is important, for example, for separating acids of high and low molecular value as well as saturated and unsaturated acids. Polymerised compounds, oxidised acids and the like may also be selectively adsorbed. In practice, these possibilities are of importance in different directions, for example in the removal of saturated acids from olein, in the separation of drying acids from non-drying acids and the like. In the separation of mixtures of fatty acids and fatty acid glycerides, deacidification plays a particular part. The separation of such mixtures by the process according to the invention is distinguished from the hitherto usual methods by its exceptional sparing nature. In deacidfication by distillation, somewhat high temperatures are employed, so that the glycerides obtained no longer correspond to the native state. Furthermore, the accompanying substances are destroyed. This is also the case in deacidification by means of lyes. The separation by adsorption permits of recovering both the acid filtrate and coincidentally the acids in highly enriched form. They may then further be subjected to the known refining processes. With the high concentration thus obtained deacidification by distillation is also advisable.

The process will best be understood from the following example.

A mixture containing 5 parts each of stearic acid, oleic acid and linoleic acid constitutes a mass which is solid at room temperature. If this mixture is dissolved in 100 parts of benzene and the solution is subjected to a selective adsorption by passing it slowly through a high layer of granulated, water-free aluminium oxide, liquid fatty acids practically free from stearic acid remain behind after removal of the solvent. Analytic examination shows that the stearic acid is much more highly adsorbed than the unsaturated acids. It remains in the upper part of the adsorption column which, on the other hand, only contains small quantities of linoleic acid after elution with acetone. In the case of the unsaturated acids, the adsorption becomes weaker with increasing iodine number. The original mixture of the fatty acids had the iodine number 91, and the mixture recovered from the upper part of the column has only an iodine number of 60, while the mixture situated in the filtrate has the iodine number 135.

Consequently, a considerable fractionation has occurred by the simple treatment of a fatty acid mixture with a medium active in lowering surface tension. This fractionation may be carried further by repetition, if necessary employing other solvents and other adsorbents. However, this is frequently not necessary.

Further experiments showed that a stronger adsorbability of the fatty acids is present with increasing molecular weight. The analytical examination is in this case effected by the determination of the neutralisation number of the filtrate and of the elutions of different layers. Oxy-acids can also be well and selectively adsorbed.

Not only solutions, but also liquid mixtures, may be treated by the process according to the present invention. This will be shown by refer-

ence to an example of a natural glyceride mixture.

Varnish linseed oil having the iodine number 165 is made to flow very slowly through as high as possible a layer of alumina, this being assisted by the application of a vacuum. The oil flowing off shows a considerable increase in the iodine number to 192.

The selective adsorption can also be applied to mixtures of esters and free acids. If stearic acid is added to the linseed oil and the solution of the mixture is then subjected to the adsorption, the stearic acid is bound by the adsorbent. If an oil contains soaps, these are retained during its passage through adsorption columns.

The known adsorbents, such as alumina, bleaching earths, carbon, gypsum, calcium carbonate, magnesium oxide, fibrous clay and other inorganic or organic substances, may be employed for the process according to the invention. The adsorbents must be selected by preliminary tests according to the purpose of use. Similarly, it is also advisable to ascertain by preliminary tests whether and what solvents are to be employed.

The described fractionation of fatty acids of the most varied types—including the derivatives, such as oxy-acids, keto-acids and the like, their esters and mixtures of both is in the first place of value for purposes of analysis and preparation, particularly in view of the sparing treatment, which prevents modifications due to rearrangement and the like. In addition, however, the process is of considerable practical importance. This will merely be illustrated by a few examples.

The fractionation of fatty acids in the manner of the example given at the beginning may be employed in the production of olein, but particularly in the separation of more highly unsaturated fatty acids, in the soap industry. Such unsaturated fatty acids are known to impair the consistency of the soaps and the durability in storage. Similar advantages are also afforded by the fractionation of esters, while the desirability of employing more highly unsaturated fractions for the manufacture of varnish is to be noted. Finally, the fractionation of esters and fatty acids, for example for deacidification, is important, especially as a sparing treatment takes place in the present process.

For carrying out the present process, apparatus are employed in which the adsorption media necessary in large quantities are accommodated in towers, closed filter vessels having a bottom of porous or sintered material and the like, or in columns thereof or the like. The flow of the liquid is advantageously assisted by employing a vacuum on the one hand and pressure on the other hand. If danger of oxidation exists, the air must be excluded or replaced by inert gases. If a plurality of adsorption devices are connected in series, individual devices in continuous operation may be disconnected, withdrawn and rendered serviceable again. It is also possible, by subsequently passing through solvents, to effect more distinct separations or to dissolve the adsorbate, if necessary at increased temperature.

Examples

1. A mixture of stearic acid and myristic acid in the proportion of 1:1 is dissolved in 10 parts of benzene and slowly filtered, if necessary under suction, through about 6 times the quantity of aluminium oxide. The filtrate contains pure myristic acid, while the upper part of the column contains pure stearic acid. The adsorbat tained in the remaining parts of the colum mixture of both acids, the proportion of s acid decreasing towards the lower end.

2. A mixture of stearic acid and olei treated in the same manner yields a filtrat resenting pure oleic acid. Technical olei the saturated acids upon filtration throug minium oxide. The iodine number then in ing more or less according to the quantity oleic acid present. Thus, an olein havi iodine number of 89 had an iodine numb after the filtration.

3. If a mixture of stearic acid, oleic ac linoleic acid is employed, the filtrate is pletely free from stearic acid. The o iodine number of 91 increases in the filtr 135.

4. Whale oil fatty acids having the iodine ber 110.9, when dissolved in benzene give a f in which the fatty acid mixture has the number 136.7, and is therefore substa richer in unsaturated acids than the st material.

5. Olive oil to which 20% stearic acid is is dissolved in benzene and filtered throug minium oxide. The original mixture ha acid number 43.8, while the filtrate has th number 0.36. A complete deacidificatio therefore practically occurred. If the adso column is divided into four parts the fol is found: The uppermost part contains a the acid number 129, the second part a fat acid number 1.75, the third part a fat of th number 1.63 and the lowermost part a fat acid number 0.80. The same result was at with silica gel. The filtrate here had a number of 0.4.

As soon as the acid number begins to in in the filtrate with this deacidification, a f column is connected and the first is regen by treatment with fresh solvents. A plura towers may thus be connected in series. chloroethylene is also suitable as a solve this case, regeneration is preferably effecte a mixture of 95 parts of trichloroethylene parts of acetone. The columns may be con one behind the other ten or more times regeneration.

6. Whale oil of the acid number 6 was filtered through silica gel of coarse grain. acid number fell to 0.2, while at the sam the oil of the filtrate lost the train oil Here, therefore, a desirable deodorisatio curred simultaneously. If the adsorbate tracted with a solvent, for example aceto unpleasant smelling product of the acid n 60 is obtained.

7. A sulphur olive oil of the acid number was dissolved in 10 parts of benzene and f through alumina. After adsorption throug columns, the fat of the filtrate has an acid ber of 4, while that of the fat extracted fro first column amounted to 183.4.

Aluminium oxide, silica gel, fuller's fibrous clay bentonite and the like may b ployed as adsorbents. The miscellany or traction may also be employed directly for t acidification. In this case, other accompa substances may if necessary also be ads The solvent and the adsorbents must be se according to the particular case.

HANS PAUL KAUFMA

Published May 25, 1943

Serial No. 274,145

ALIEN PROPERTY CUSTODIAN

RADIO DIRECTION FINDING SYSTEMS

Ernst Kramar, Berlin, Germany; vested in the Alien Property Custodian

Application filed May 17, 1939

This invention relates to radio direction finding systems, and more particularly to new and useful means applicable in the receiving positions of such systems to improve reception of sharply bundled guide beams of radiation emanated from a radio beacon transmitter.

It is taught by experience that the effectively desired action of radio beacon transmitters, which are adapted to produce either alternately keyed or differently modulated and mutually intersecting radiation diagrams for the purpose of allowing amplitude comparison between the resulting signal voltages to be carried out in a direction finding receiver becomes harmfully influenced by buildings, iron framework and the like obstacles which in the vicinity of such transmitter act as unintended and undesired reflector and reflectors of the electromagnetic energy emitted by a radio beacon transmitter. The electromagnetic waves subject to reflection at such obstacles coact with the non-reflected direct radiation from the transmitter to build up standing waves, which so distort the radiation diagrams of the radio beacon that they are rendered more or less ripple dependent upon size and position of such reflectors. The numerous cusps resulting from this rippleness are extremely critical particularly in the region of the course line radiation beam, because of the fact that the undulated directional radiation patterns under certain circumstances are caused to intersect each other at a larger number of points instead of at only two points which are desired for defining the line of equal field intensity, so that in addition to the radiation guide beam defining the course line, a plurality of harmful divergent secondary beams is produced.

Attempts have been made in the past to overcome this difficulty by "concentrating" in a radio receiving equipment an incident divergent guide beam of radiation by so selecting the operating characteristic of the indicating means, e. g. by employing rectifying and amplifying tubes having a rectangular characteristic that amplitude differences set up in the input circuit of the receiver occur as enlarged differences in the output circuit thereof.

The deleterious effect described in the penultimate paragraph may in fact be avoided in a radio beacon transmitter by the provision of suitable directional antenna arrays or systems capable of more sharply bundling the directional radiation patterns subject to comparison in order to obtain more acute angles of intersection therebetween. This expedient has been found satisfactory despite the rippled shape of the directional radiation patterns which are effectively caused to intersect one another only in two points desirable for obtaining the requisite course line beam of radiation. However, the extraordinarily pronounced sharpness of a guide beam of radiation resulting from such sharply bundled radiation patterns intersecting each other at very acute angles has not been well adaptable in the past for guiding aircraft, since the acoustically and/or optically indicating instruments forming part of a direction finding receiver mounted on such vehicle are caused to so sensitively respond thereto, that even the slightest deviation from the course line would involve exaggerative indications in or on such instruments. The aeroplane would thus too easily be subjected to a pendulum movement to and fro the actual course line on account of the pilot's continuous attempts to correct for such deviation from the proper direction of flight.

It is the object of this invention to overcome the difficulties referred to in the foregoing by imparting specific measures to direction finding receivers which are adapted to cooperate with a radio beacon transmitter emitting a sharply defined guide beam of radiation.

This problem is solved in accordance with one specific aspect of my invention by so influencing the characteristic of operation of a radio receiver in which field intensity differences of electromagnetic waves occurring in the input circuit thereof are converted into sound volume differences, that the proper sensitiveness of the indication instruments cannot exceed the permissible value adequate for wireless navigation even in response to sharply defined beams of radiation as mentioned above. This is achieved according to the main feature of my invention by so imparting the voltage differences of incoming signals to a change, that the corresponding voltage difference across the output circuit of the receiver is subjected to a considerable decrease. This amplitude difference decrease is preferably made adjustable in order to enable the pilot to individually regulate the sensitiveness of indication to a proper value, and particularly to accommodate such regulation to the atmospheric conditions prevailing. It is thus obvious that the measures for decreasing amplitude differences in a radio receiver as proposed in the present invention are quite contradictory to the amplitude difference increase endeavoured according to prior art as stated in the foregoing.

My invention will be more readily understood

from the following description taken in conjunction with the accompanying drawing, in which

Fig. 1 is a graph explanatory of one possibility for putting this invention into effect, while Fig. 2 schematically shows the possibility involving a further solution of the problem concerned.

The problem of securing an amplitude difference decrease which according to the main feature of this invention is to be carried out in a radio receiver in order to provide possibilities for securing reliable navigation even in response to an extremely defined beam of radiation allows different solutions.

One of the possible solutions which is based upon the facility to adjust the operating point of a radio receiving equipment to a range of its characteristic which presents a slightly ascending branch. This is shown in the graphic representation of Fig. 1. The signal voltages emitted from a radio beacon transmitter, picked up by the antenna and applied to the input circuit of a receiver, are diagrammatically shown in the lower part of this graph, while the voltage differences across the receiver output circuit in response to the adjustment of the operating point to a slightly ascending branch of the characteristic are considerably minimized as shown at the right hand of this figure. The last mentioned signals are then conveyed to a position indicating instrument which may be a pointer indicator or a telephone receiver.

A further solution of the problem subject to my invention is embodied in Fig. 2. Signal voltages diagrammatically shown at the left hand of Fig. 2 incoming to the amplifier of a radio receiving equipment are caused to so control a regulation voltage generator, in turn controlling the amplifier, that the signal voltages, that is voltage variations in the output circuit of the amplifier are reduced with respect to the corresponding amplitude variations existing across the input circuit of the amplifier. Such difference decrease is effected in a reg circuit having a low time constant. In de signal voltages incoming to the amplifier in a regulation voltage generator, and the re regulating voltage from this generator ducted back to the amplifier to so regul gain thereof that the voltage differen smaller in the output circuit than in th circuit. The signals thus occurring in t put circuit are shown to the right of These signals are applied to a telephone r

The above described solutions of the p to so influence voltage differences betwe nals incoming to a radio receiver tha mized amplitude differences occur across t put circuit thereof are of great importan cifically when acoustic position indication cerned, because of the fact that it has he been almost impossible to correctly deter ascertain the magnitude of the amplitude ences in a telephone receiver since in r to a sharply defined guide beam of radia ferred to in the foregoing, even the faint nal tone difference corresponding to the s almost inevitable deviation from the course line and perceived in a telephone as a tone predominant over the continuo tone will cause the pilot to continually en correction for such deviation with the res the aeroplane will be subject to a pendu zigzag movement to and fro the actual line.

The expedient according to my inver provide means capable of effecting an difference decrease and of correctly reg the sensitiveness of indication in a radio involves considerable features of novel ticularly when such receiver is adapted spond to sharply defined guide beams of tion.

ERNST KRA

PUBLISHED

MAY 25, 1943.

BY A. P. C.

E. KRAMAR

RADIO DIRECTION FINDING SYSTEMS

Filed May 17, 1939

Serial No. 274,145

Fig. 1

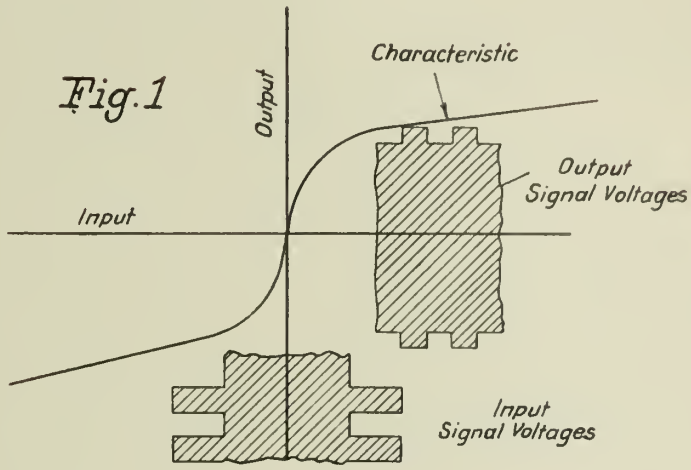

Fig. 2

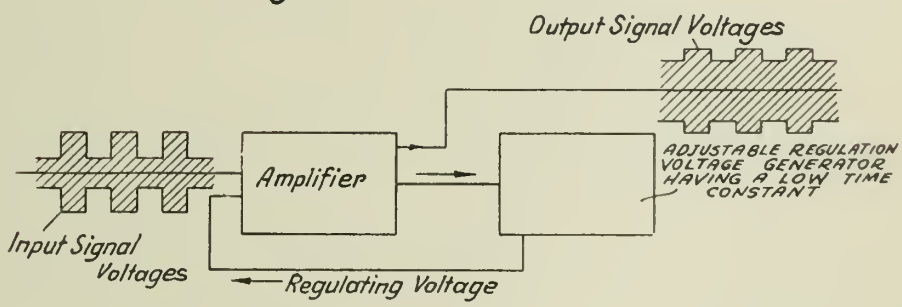

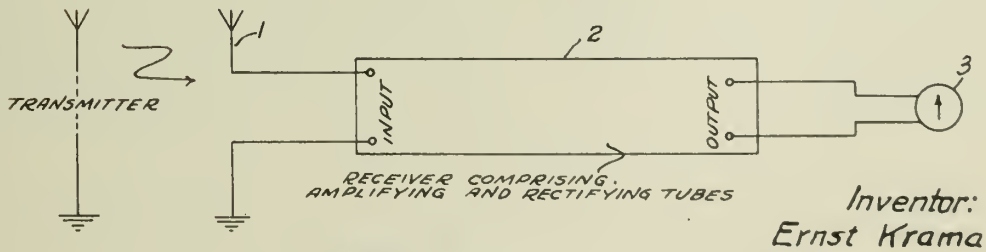

Fig. 1A

Inventor:
Ernst Kramar
by E. D. Hunting
Attorney.

Published May 25, 1943

Serial No. 274,832

ALIEN PROPERTY CUSTODIAN

BOTTLE CLOSURE

Anna Netalová and Antonie Wolfová, Prague, Bohemia-Moravia; vested in the Alien Property Custodian

Application filed May 20, 1939

This invention relates to a bottle closure formed by a disc which is made of cardboard and whose edge is provided at a suitable location with a gripping tongue to permit removal of the disc from its closing position, e. g. from the bottle.

The invention consists in that the gripping tongue is formed by a portion, defined by perforations, of a covering disc integral with the closure disc. The closure and covering discs are so stuck to each other that the gripping tongue lies free on the closure disc and is not adhesively connected thereto. By pulling the gripping tongue the same is first separated from the covering disc by a tearing action along the perforations and then the closure disc is removed from closing position whereby the bottle is opened.

The drawings show by way of example two constructional forms of the new bottle closure.

Fig. 1 shows in plan view a closure piece of 8-shaped configuration.

Fig. 2 shows a plan view of the closure piece in folded down position.

Fig. 3 is a vertical section through a bottle with the closure inserted therein, such closure being shown partially opened.

Figs. 4, 5 and 6 show in similar manner a second constructional form of the closure.

The closure shown in Figs. 1 to 3 comprises a cardboard piece having the shape of the cypher eight whose contour is formed by two discs **7**, **8**. The disc **7** serves as closure disc and the disc **8** serves as covering disc. The two discs are connected together by the restricted portion **9**.

The restricted portion **9** constitutes also the starting point for a tongue **12** which is produced in the disc **8** by cutting, stamping or otherwise forming perforations **10**, **11** and an opening **13**.

In order to make the above described closure suitable for insertion into a bottle the eight-shaped piece is folded down about the restricted portion **9** and the discs **7**, **8** are adhesively connected to each other. The adhesive is applied outside the contour of the tongue **12**.

In this form the closure piece may be forced in the usual way into the bottle, as shown in Fig. 3.

To open the bottle it is only necessary to grip the tongue **12** by the free end thereof located in the opening **13**, and to pull strongly upwards. Thereby the perforation lines **10**, **11** are torn and then the closure piece is removed from the bottle.

In the constructional form shown in Figs. 4 to 6 the eight-shaped piece comprises a smaller disc **14** and a larger disc **15**.

The restricted portion **16** connecting the two discs **14**, **15** is formed by the ends of notches **17** which extend inwardly from the periphery of the larger disc **15**.

The gripping tongue **18** is formed by perforations **19**, **20** and an opening **21**.

If the eight-shaped piece shown in Fig. 5 is folded down a border **22** is formed which when the closure is inserted into the bottle bears in the manner of a flange tightly against the inner wall of the bottle.

With this constructional form of the invention opening of the bottle is effected also by pulling the tongue **18** whereby first the perforations **19**, **20** are torn and then the whole closure piece may be removed from the bottle.

ANNA NETALOVÁ.
ANTONIE WOLFOVÁ.

PUBLISHED
MAY 25, 1943.
BY A. P. C.

A. NETALOVÁ ET AL
BOTTLE CLOSURE
Filed May 20, 1939

Serial No.
274,832

Fig.1.

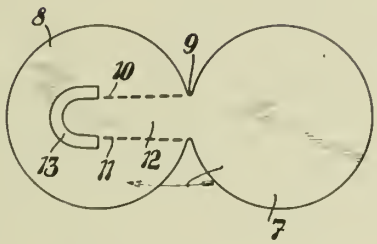

Fig.4.

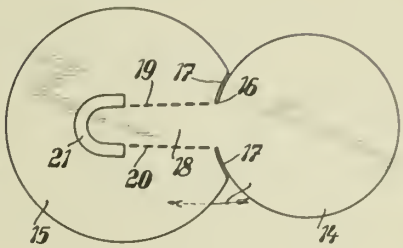

Fig.2.

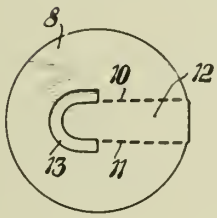

Fig.5.

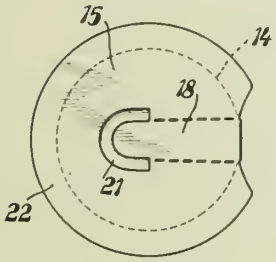

Fig.3.

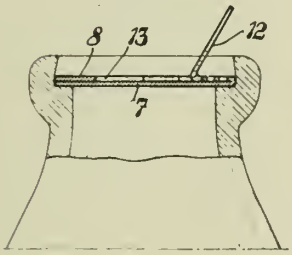

Fig.6.

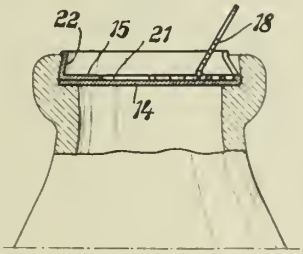

Inventors
Anna Netalová and
Antonie Wolfová
By
Young Emery & Thompson
Attorneys

Published May 25, 1943

Serial No. 275,201

ALIEN PROPERTY CUSTODIAN

BOTTLE CLOSING DEVICE

Nikolaus Meurer, Cologne, Germany; vested in the Alien Property Custodian

Application filed May 23, 1939

Bottle closing devices are known, especially for liquids containing large quantities of gas such as mineral waters, which consist of a rigid carrier core for the stopper made for example of rubber, whereas the upper end of the carrier core is surrounded by a body such as a cap freely rotatable relatively to the core and which serves for gripping.

When this body is turned, the carrier core and stopper moves upwards and is radially expanded or stretched for the purpose of closing the bottle or is contracted, that is its diameter is reduced to less than that of the bore of the bottle neck for the purpose of opening the bottle. Rubber plugs cannot, however, be used for many beverages for numerous reasons.

The bottle closing device according to the invention enables the use of cork as a stopper mounted on the rigid carrier core without the cork being excessively stressed. This object is attained by constructing the carrier core so that, during the closing operation, it deforms the cork more strongly at its upper end than at its lower end, that is the upper end is radially distended and at least the longer lower portion of the cork protects the material against fatigue which is soon caused by repeatedly overstressing its elastic properties and leads to a deterioration of its tight closing properties.

Generally this special construction of the carrier core can be attained by tapering at least a portion of the carrier core, which may be either within the cork or within an elastic second packing member covering the upper end face of the cork. Therefore, in cases in which it appears particularly necessary to produce a packing resisting strong gas pressures, a second packing member of rubber is according to the invention arranged on the carrier core above the cork and, during the closing movement, is caused to bear tightly against the upper end face of the cork on the one hand and against the bottle mouth on the other hand, so that not only resistance against strong gas pressures in the contents of the bottle is ensured but also an undesirable too great deformation of the upper end of the cork is prevented without the upper packing member on the cork coming into contact with the contents of the bottle.

Several embodiments of the invention are illustrated by way of example in the accompanying drawing, in which:

Fig. 1 shows in elevation and in closed state the upper end of a bottle fitted with the closing device,

Fig. 2 is a longitudinal section of Fig. 1,

Fig. 3 is a part longitudinal section of the device without outer cap,

Fig. 4 is a longitudinal section of a modified form of construction,

Fig. 5 shows a third form of construction in longitudinal section,

Fig. 6 shows a fourth form of construction in longitudinal section,

Fig. 7 is a cross-section on line I—I of Fig. 6.

The closing device comprises a cork 1 which, before being assembled with other closing parts, is cylindrical along its entire length, a carrier core 2 for the cork 1, which carrier core in the construction illustrated in Figs. 1 to 3 has a few screw thread turns only at its lower end and is made for example of porcelain, glass or artificial resin, a reinforcing collar 3 formed on the upper end of the bottle neck 4, and a cap 5 for example of bell shape, having an internal screw thread 21 (Fig. 2) and serving as gripping means. The upper edge of the bottle neck is designated by 6; 7 is a tapered middle portion of the core widening in upward direction, 8 is a flange or collar plate formed at the upper end of the tapered portion 7, and 9 is a cylindrical head piece of the carrier core extending upwards from the flange plate 8 and having a central bore 26. The cap 5 has at its upper end a boss 23 with a central bore 12 (Fig. 2) for the reception of the head piece 9 of the core. In the examples illustrated in Figs. 1 to 4 and 6 the cork 1 has a central bore 13 extending partly through the cork from the upper end thereof, which bore tapers from its upper end into a cylindrical portion at its lower end, the tapered portion of the bore being of smaller diameter than the tapered portion 7 of the core 2, 7, 8, 9 before the core is screwed into the bore. 14 is a spring ring slipped over the rounded end face of the core head piece 9 and fitting in an annular groove 20 in the periphery of this head piece. This ring 14 is of slightly larger diameter than the bore 12 in the hub 23 of cap 5 and engages in a widened portion 15 at the upper end of this bore, the ring 14 being supported by a shoulder formed between the widened portion 15 and the bore 12. A shoulder 17 is formed at the lower end of the screw thread 21 in the cap 5 between this thread and a smooth skirt 18 at the lower end of the cap, the bottle neck 19 extending upwards from the collar 3 to the upper edge 6. A strip 22 of paper or the like straddles the cap 5, its ends being stuck tightly on the

bottle neck and secured by a closing strip **24** of paper pasted around the bottle neck.

It is evident that the hub bore **15** must be so dimensioned that the spring ring **14** can easily be slipped on to the head piece **9** into the groove **20** and can be slipped off the head piece with the aid of a hook-shaped tool.

As the cork bore **13** enables the insertion of the carrier core **2, 7, 8, 9,** by screwing the thread on the lower end of the core **2** into the cork with the aid of a key inserted in the bore **26** which is preferably of angular cross-section, the cork is forced outwards merely on the tapered portion, the displacement gradually increasing towards the upper end of the cork. Consequently, before the device is inserted in the bottle neck the upper portion of the cork **1** influenced by the tapered portion of the core is given a conical shape widening towards the bottle neck bore. This portion is therefore made conical without being cut in conical shape, with the result that the production is cheaper, and it need only have a portion which is slightly, say one millimeter, thicker than the width of the bottle mouth. Thus, the introduction and removal of the cork is very considerably simplified but nevertheless an absolutely tight closure is obtained, because, as can be seen from Fig. 3, the conical thickening of the cork only commences at the base of the tapered portion **7**. The lower end of the cork **1** can be easily inserted into the bottle neck when closing the bottle, by exerting a downward pressure on the cap **5** held in the hand. A greater resistance on the conically widening portion is easily overcome by subsequently screwing the cap **5** by means of the screw threads **19, 21,** so that the leverage of the screw thread assists the pressure exerted on the cap. At the same time the skirt **18** of the cap bearing against the periphery of the reinforcing collar **3** centres the vertical movement.

The upper edge portion of the cork **1** at the end of the downward movement bulges under the influence of the tapered portion **7** and the flange **8** in the manner illustrated in Fig. 2 with the result that a sufficiently tight closure for all liquids not under tension is obtained.

In the second form of construction shown in Fig. 4 the screw thread **21** is arranged in the reinforcing collar, and the female screw thread in the cap **5** is arranged in the lower end of the cap.

The cork **1** in this form of construction is covered at its upper end by a rubber disc **10** which engages in an annular groove-like bearing above the screw thread of the carrier core **7***a* which here extends conically along the entire length engaging the cork and has a screw thread along the whole of this length. The screw threaded conical portion **7***a* is consequently not stepped; the thread cuts tightly into the flesh of the cork when the carrier core is screwed during the assemblage of the device.

The cork bore **13** in the previously described examples is shown not entirely filled by the core screwed therein. The portion of the bore remaining free enables liquid from the bottle to enter this bore when the bottle is in horizontal position. The liquid entering therein wets the cork from the inner side even when the bottle is temporarily stood upright. Thus, a hardening of the material at the mouth of the cork is avoided. The closing device can be opened with very little exertion by unscrewing the cap **5**, because the first and greatest resistance is overcome by turning the cap **5**. During this turning movement the cap **5** pulls the cork with the core out bottle neck until the cap thread leaves the thread on the bottle neck. A pull is then e using the cap as a gripping means. As ha mentioned already, the cork **1**, before being is made only slightly thicker than the mo the bottle, it widens only slightly after t sertion of the core because, even in the con tion illustrated in Fig. 4, the core **1** rem cylindrical at its lower end only commen taper appreciably from about half its len the portion of the conical portion **7***a* of th rier core which is here of larger diameter.

The cap **5***e* is, in the third form of con tion shown in Fig. 5 also in closed positio consists of a nut which is screwed on to the threaded head piece **9***a* of the core **2***a*, **2***b*, and bears against a guide element **5***a* loosely surrounds the head piece.

This core carries three closing parts arr one above the other, namely the cork **1***b*, ring **1***a* and a rubber ring **10***b*. The cork rin mounted on a cylindrical portion **2***c*, an corb **1***b* which has a bore, which does not e right through, is screwed on to the foot p **2***a* of the core. A flange **2***b* between the po **2***a* and **2***c* serves as support for the cor **1***a* and for forming a collecting space 1 accommodating liquid.

The soft rubber ring **10***b* mounted on a c portion **7***b* of the carrier core may be omitt bottles for liquids which do not contain are only slightly alcoholic.

The lower surface of the gripping cap re the ring-shaped guide element **5***a* whose p ery is roughened or fluted. The guide el **5***a* has a bore giving free access to the c core portion **9***a*. The annular space **15***b* erates with the outer side of the mouth reinforcing collar **3** and forms a guide c the vertical displacement of the core, to e the coaxial movement of the parts of the ing body.

Before commencing the closing operatio cap **5***e* is screwed on to the head portion far as possible without its hub exerting pr on the guide element **5***a* so that this elemen not exert any pressure on the packing rin The ring **10***b* and the cork ring **1***a* are the not stressed and, as the cork ring **1***a* and th **1***b* are of only slightly larger diameter tha aperture of the bottle mouth, both cork the ring **10***b* mounted on the cone **7***a* c pressed into the bottle neck until the guid ment **5***a* rests on the mouth **6** of the bottle. guide element **5***a* is then gripped and held t in one hand and the cap **5***e* is turned wit other hand with the result that the carrie **2***a*, **6**, **7***b*, **9***a* is pulled upwards into the cap. ing this movement the inwardly bevelled end of the hub **5***c* of the guide element **5***a* squ the ring **10***b* both against the wall of the and against the cone **7***b*. This hub **5***c* a same time presses the ring **10***b* against the ring **1***a* with the result that this ring **1***a* is pressed and resting against the flange pressed radially against the wall of the f neck so that in conjunction with the rin a liquid and gas-tight closure is produced.

During the opening operation the guide ment **5***a* is relieved by unscrewing the cap **5** no longer exerts pressure on the rings **10***b* a with the result that the core can easily be p out of the bottle neck with the closing ele **1***a*, **1***b* and **10***b*.

The last form of construction, illustrated in longitudinal section in Fig. 6 and in cross section on line I—I of Fig. 6 in Fig.) operates in a similar manner to the construction shown in Fig. 5. A cylindrical cork 1c forms the closing element and has an axial bore 13b extending through part of its length, in which bore a conical foot piece 7a on a spindle-shaped carrier core 11 engages. The foot piece 7d of the core 11 might be provided with screw threads and screwed into the flesh of the cork instead of being smooth and conical.

The spindle 11 has at its upper end a screw thread engaging a nut sleeve 27, whose middle portion 27a has a smooth cylindrical periphery. The head of the sleeve 27 is hexagonal whereas the lower end has an external thread engaging a nut 28. The head of the sleeve 27 fits in a recess 29 adapted to its shape and formed in a bottom plate 30 fitted in the cap 5d. By turning the cap 5d the parts 27, 27a, 27b, 28 and 29 are also rotated but the spindle 7d, 11 is only axially displaced because the spindle 11 has a longitudinal groove 11a in which a projection 31a on the base 5b serving as guide engages. The under surface of the wall surrounding the recess 29 in the cap bottom plate 30 rests on a cover plate 32 of the base 5b. The plate 32 is reinforced by a ring 33 and by a cup-shaped structure 31 accommodating the nut 28. The above mentioned projection 31a is formed on the periphery of a bore in the bottom of the cup for the passage of the spindle 11. The cap 5d, its bottom 29, 30, the parts 33 and 31 and also the spindle 7d, 11 with the parts 27, 27a, 27b and 28 mounted thereon, are assembled to form a constructional unit in that the discs 31, 33 have three or four uniformly distributed slots 3a through which flaps 5f on the cover plate 32 of the base 5b extend and are bent over on to the under side of the disc 31 and thus unite the parts 31, 33. When the cap 5d is turned, the nut 28 prevents it from becoming detached from its base 5b without preventing its movement relatively thereto but, as the base rests on the bottle, it must be held firmly with one hand. The parts 5b, 5d, 29, 30, 31, 32 and 33 may be made of sheet metal. The spindle 7d, 11 may be made of metal or artificial resin. The space 13b not filled at the bottom by the cone 7a enables the collection of liquid from the bottle for the purpose of moistening the cork 1c from the interior.

By pressing the spindle foot 7d into the bore in the cork 1c the material of the cork at the mouth of the bore spreads inwards over the upper surface of the foot 7d. Before this takes place, a rubber ring 10a must be slipped over the conical foot until it bears against the under surface of the cup bottom 31.

For the purpose of closing the bottle, the closing elements 1c and 10a mounted on the spindle 11 of the closing element thus assembled are introduced into the bottle neck. The base 5b is then gripped and tightly held in one hand while the cap 5d is turned with the other hand. The spindle 11 then moves upwards and the ring 10a is compressed. Under the pressure exerted by the under surface of the part 31 against the top surfaces of the closing elements 10a and 1c, the material of the ring 10a is also pressed against the cylindrical portion of the spindle and into the space above the conical portion 7a, the cork 1c being forced inwards at its upper end like a collar so that the cork 1c and the conical portion 7a of the spindle are firmly connected, and the two closing elements 10a and 1c are at the same time pressed against the wall of the bottle neck.

NIKOLAUS MEURER.

PUBLISHED

MAY 25, 1943.

BY A. P. C.

N. MEURER

BOTTLE CLOSING DEVICE

Filed May 23, 1939

Serial No. 275,201

Fig. 1

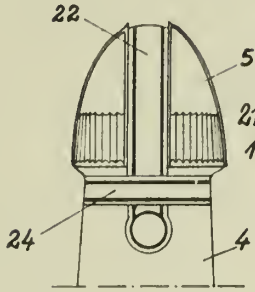

Fig. 2

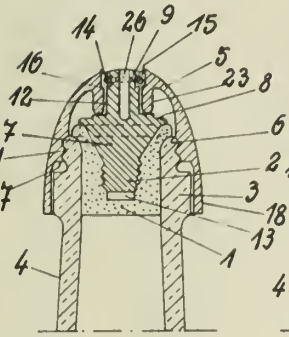

Fig. 3

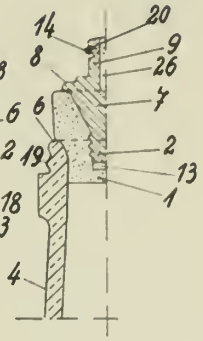

Fig. 6

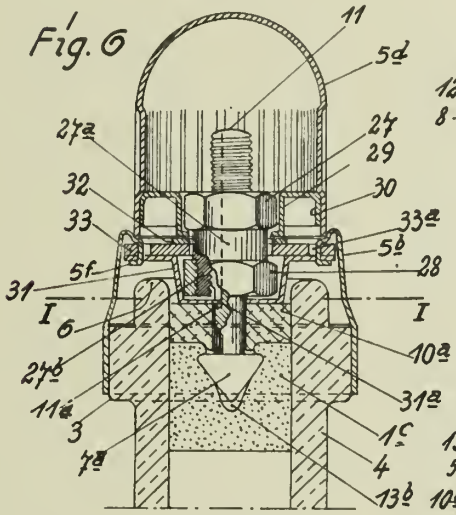

Fig. 4

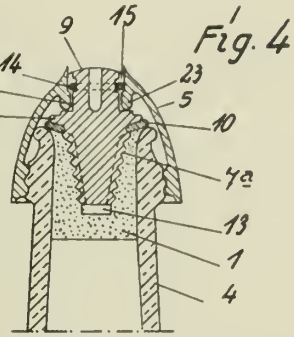

Fig. 5

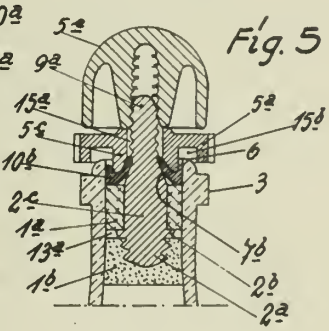

Fig. 7

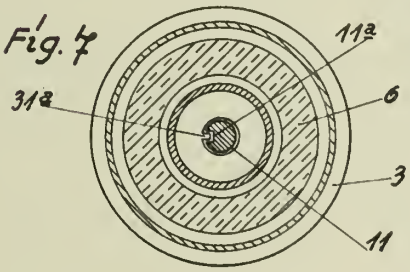

Inventor:

Nicholaus Meurer

by

Gustav Bock

his Attorney

Published May 25, 1943

Serial No. 276,020

ALIEN PROPERTY CUSTODIAN

WASHING, DETERGENT AND SOFTENING AGENTS

Ferdinand Bornemann and Hans Huber, Wiesbaden, Germany; vested in the Alien Property Custodian

No Drawing. Application filed May 26, 1939

This invention relates to washing, detergent and softening agents.

It is known to use phosphates as washing and detergent agents and also for softening water. When ortho- and pyrophosphates are employed in this manner, the calcium or magnesium salts in the water are precipitated and the resulting softened water is utilized as boiler feed or for washing and cleansing purposes. Another method of rendering innocuous the calcium and magnesium salts present in water consists in treating the water with water-soluble metaphosphates, which have the property of retaining the calcium and magnesium salts in solution, or of redissolving calcium or magnesium soaps that have been thrown down by the previous employment of soaps.

It has now transpired in accordance with the present invention that the calcium and magnesium salts contained in water can be retained in solution, or redissolved, by adding alkali metal polyphosphates thereto. As is well known, orthophospheric acid has a ratio of H_2O to P_2O_5 of 3 to 1. Pyrophosphates have a ratio of H_2O to P_2O_5 of 2 to 1, and metaphosphates of 1 to 1. Polyphosphoric acids have a ratio of H_2O to P_2O_5 between 2 to 1 and 1 to 1, representing always a ratio of two integers within this range. For example, tripolyphosphoric acid has a ratio of 5 to 3. Waters softened with polyphosphates in this manner are primarily suitable for washing and cleansing purposes, but may also serve for dissolving calcareous incrustations in boilers. They may be used either alone or in association with the known washing agents or detergents.

The aforesaid alkali metal polyphosphates can be produced in a great variety of ways, for example by heating sodium sesquiphosphate, which is advantageously prepared, in solution or in the solid state, by mixing mono- and disodium phosphates, or from trisodium phosphate and a corresponding amount of phosphoric acid, or again from phosphoric acid and sodium carbonate. Moreover, alkali metal polyphosphates can be produced by calcining trisodium pyrophosphate. Speaking generally, suitable polyphosphates can be produced by calcining phosphatic salts (pyrophosphates included), or mixtures of such phosphatic salts as furnish substantially neutral products.

The term "neutral", as here used, means that the salts do not contain an ionizable hydrogen radical.

It has also transpired that it is not essential to employ pure originating materials for the production of the alkali metal polyphosphates, but that, on the contrary, the commercial salts in general use are suitable for that purpose. Thus, for example, the known double-salt of sodium fluoride and trisodium phosphate, may replace pure trisodium phosphate as originating material.

It is true that polyphosphates, especially those of sodium, have already been described in the literature—see Gmelin's "Handbuch der anorganischen Chemie", 8th Edition, 1928, chapter "Sodium", pp. 924/925. However, the literary reference to these polyphosphates relate to the production of well-defined substances which can be crystallized from the melt or from the water. In the process of the present invention on the contrary, no attempt is to be made at the production of such pure polyphosphates. On the contrary, the mixtures of polyphosphates, such as are generally obtained by the present process can be employed as washing, detergent and softening agents without their action being impaired. That there is no need to employ pure polyphosphates as washing, detergent and softening agents is also evident from the fact that commercial phosphoric acids (such as those containing fluorine) or their salts may be used as the originating materials.

The alkali metal polyphosphates produced in accordance with the present invention have pH values of about 9.0 to 9.5, and therefore, do not exert any such corrosive action as, for example, trisodium phosphate. They are, moreover, all soluble in water, and do not require, in their preparation, any such special measures for insuring the attainment of water-soluble products, as is the case with the likewise neutral known metaphosphates, of which only one special group is completely soluble in water. It may also be mentioned that temperatures of at least 500° C and over are needed in the production of the metaphosphates, whereas temperatures of only about 300–500° C are required for the calcination of neutral or approximately neutral pyrophosphates, or phosphate mixtures, according to this invention.

The polyphosphates have a further advantage over metaphosphates in that they are non-hygroscopic. They are also effective in repressing calcium ionizations over the large range of pH values from 8.0 to 10.5.

Likewise, the normal pH of the polyphosphates is in the most desirable range from the standpoint of such repression. There is on this account no need to adjust its alkalinity, as is nec-

essary with the metaphosphates which have a normal pH of about 6.5.

We have discovered that the calcium and magnesium salts contained in water can be maintained in solution or, if the calcium and magnesium have been precipitated in the water by the previous employment of soap, can be redissolved, by the addition to the water of the treating agent according to this invention, i. e. an alkali metal salt of tripolyphosphoric acid, preferably sodium tripolyphosphate ($Na_5P_3O_{10}$), or a mixture containing such a salt as an essential ingredient thereof.

A preferred polyphosphate is the sodium salt, $Na_5P_3O_{10}$, of tripolyphosphoric acid, $H_5P_3O_{10}$.

The sodium tripolyphosphate, or other alkali metal tripolyphosphate, employed according to this invention may be produced in a variety of ways. Thus, on cooling a fused mixture of 100 parts of anhydrous sodium pyrophosphate ($Na_4P_2O_7$), with 50 parts of sodium metaphosphate ($NaPO_3$) which has been kept at a bright red-heat for about half an hour, a crystalline mass of sodium tripolyphosphate may be obtained. This method which, per se, forms no part of the present invention and was known to the prior art, involves the drawback that three heating steps are really involved therein. The pyrophosphate must first be made from disodium phosphate, the metaphosphate from monosodium phosphate, and the tripolyphosphate from a mixture of pyrophosphate and metaphosphate, each step involving a heating treatment.

A preferred method of forming the tripolyphosphate according to the present invention is by a process involving only a single heating. The principle of this preferred method is to react with a phosphate containing a ratio of a base (Na_2O, for instance) to P_2O_5 less than that of pyrophosphate and greater than that of metaphosphate, and to make the tripolyphosphate in a single heating operation. This method is disclosed, as applied to a series of polyphosphates, in our aforementioned earlier-filed application where the initial material is subjected to a calcination treatment at a temperature of about 300–500° C.

The material is employed in water softening use in the same manner as the metaphosphate. Its calcium ion repressive power is of the same order, but under some conditions of pH is much greater.

This application is a continuation-in-part of our copending application Serial No. 746,774, October 4, 1934.

FERDINAND BORNEMANN
HANS HUBER.

Published May 25, 1943

Serial No. 279,077

ALIEN PROPERTY CUSTODIAN

DECADIC KEYING MECHANISM FOR ACCOUNTING MACHINES OR THE LIKE

Johannes Sobisch, Bielefeld, Germany; vested in the Alien Property Custodian

Application filed June 14, 1939

My invention refers to a decadic keying mechanism for counting machines or the like, including a stationary numeral recording or accumulating mechanism which receives the numbers, digit by digit, commencing with the highest (left-hand) digit.

Devices of this kind known from the prior art have the disadvantage that they are not suitable for the simultaneous introduction of several zero digits side by side. With some of the known arrangements it is possible to introduce several zero digits simultaneously into the mechanism, but in those cases it is necessary to arrange the symbol-carrying elements on slides. To apply such methods in counting machines of the type here concerned is not practical, if possible at all.

It is the purpose of the present invention to solve the aforementioned problem in a comparatively simple and effective manner.

The accompanying drawings illustrate a manner in which my invention may be reduced to practice. In these drawings—

Fig. 1 shows in plan view the right-hand side of the keying mechanism.

Fig. 2 shows in plan view the left-hand portion of the mechanism which supplements the right-hand portion of Fig. 1, the connection between the two parts being apparent from the bars 87 common to Figs. 1 and 2.

Fig. 3 represents a left-hand elevation of the keyboard, including its multi-zero keys.

Fig. 4 represents a transverse section through the upper portion of Fig. 3 on the line 4—4 in that figure.

Fig. 5 represents the front view of the control stops for the accumulator or recording elements to be actuated.

Fig. 6 represents a left-hand side elevation of Fig. 5.

Fig. 7 represents a right-hand side elevation of Fig. 2 showing the control mechanisms for the accumulator elements.

Fig. 8 represents an isometric view from above of the right-hand portion of Fig. 7, whereby the operating elements of the several digits are shown moved apart for clearness sake.

Fig. 9 represents a plan view of the elements shown in Fig. 7, with some of the elements omitted, and

Fig. 10 represents a right-hand side elevation of the upper left-hand portion of Fig. 7 in numeral-indicating position.

Referring to Figs. 1, 3 and 4, the key levers 4, which carry the key heads 8 denoted by the numerals "1" through "9", are journalled on the round bar 3, the latter being fastened between the side walls 1, 2 of the machine frame. The key levers 4 are prevented from lateral movement by guiding them in the slots 5 of a slotted transverse plate 6 and in a slotted plate 7 arranged at the front of the machine, both plates being disposed between the side walls 1, 2 of the machine frame. To the rear lever end 9 of each key lever 4 a spring 10 is attached, the other end of which is fixed on the machine frame, which springs tend to pull the key levers 4 against the underside of a transverse bridge 11 extending between the two side walls 1, 2 of the machine frame. Each key lever 4 carries a downwardly extending detent 12 (Fig. 3), the inclined portion 13 of which is, in normal position of the key lever, slightly spaced from the round bar 14 which is part of a bail including besides this bar the shanks 15 and 17 (Fig. 1), the latter being pivoted on an axle 16 mounted between the frame portions of the machine. The left-hand shank 17 of this bail is extended beyond its pivoted axis to form an arm 18, carrying at its outer end a pin 19 which engages the forked end of a lever 20 fixed on an axle 21 (Figs. 1, 3, 7 and 9) which is mounted parallel to axle 16 in brackets 22 arranged at the bottom of the machine frame. Near its left-hand journal, axle 21 carries a further lever 23 (Figs. 7 and 9), to the upper end of which is pivotally attached a pull bar 24. The other end of bar 24 is linked to the free end 25 of a lever 26, the latter being horizontally oscillatable on a pivotal stud 29 together with similarly disposed levers 27 and 28 to be referred to later on. Each of these levers, however, is controlled by a spring 30 which tends to pull its lever counterclockwise against the stops 31. In this manner, for instance, lever 25 rests with its edge 32 of its arm portion 33 close to the end 34 of a control rocker 35 when in resting position. As shown in Figs. 7 and 8, for each digit a locking rocker 36, oscillatingly mounted on a common axle 146, is provided and which has a downwardly extending arm 145 to which for each digit the aforementioned type of control rocker 35 is pivotally attached. A spring, attached at one end to the rear end of control rocker 35 and at the other end tothe rearwardly pointing end of locking rocker 36, tends to turn control rocker 35 counterclockwise until this rocker abuts against its stop pin 38 provided on the downwardly extending arm 145 of the locking rocker. This conditions prevails in the resting position of the mechanism only with respect to control

rocker 35 appertaining to the extreme left-hand noted from Fig. 8.

Each locking rocker 36 also carries a forwardly extending arm 39 (Figs. 7 and 8) which is guided in a notched plate 190 of the machine frame and engages, with its bent end 40, the recess 41 of the horizontal rack bar 42 appertaining to that digit. The right-hand side of recess 41 has only a small abutment edge 46, which rises as shown at 44 into an elongated cam 43. Each rack bar 42, of which there are provided as many as there are digits available in the machine, is individually influenced by a spring 45 which tends to pull it forward (Fig. 7), so that it will abut with its stop 46 aforementioned against the bent end 40 of arm 39. A spring 47 tends to turn locking rocker 36 clockwise on its pivotal axis 146 so that the detent portion 40 of its arm 39 is normally held in recess 41 and against its stop 46. Each locking rocker 36 is further provided with an upwardly extending arm which has its end 48 bent at right angles to the plane of the rocker so that when arm 36 is in normal resting position, it is spaced a slight distance from the rear end 49 of appertaining rack bar 42, as is clearly shown in Fig. 7. The front portion (left-hand portion in Fig. 7) of each rack bar 42 is provided at its upper edge for a short distance with rack teeth which mesh with the pinion 50 of the appertaining symbol disc 51 which carries the numeral symbols "0" to "9" on its periphery. These numeral symbols are individually visible to the observer through the window 53 provided on the front cover of the machine, as is shown in Fig. 7. Each rack bar has its individual pinion and numeral disc, and all discs and pinions are journalled on an axle 52 fixed between the side walls 22ª, 22ª of the machine frame, as is clearly shown in Fig. 2. The several numeral discs, as is also shown in this figure, are sufficiently spaced apart to permit certain elements, to be referred to hereinafter, to enter between adjacent numeral discs and engage respectively the pinions of the discs. The arrangement is such that each numeral disc, when in resting or normal position, shows in the window 53 an idle symbol, such as for instance a red mark. The rack bars for all the digits are guided by means of slots 55 which engage a common guide bar 54 provided with a groove 54ª for each rack bar. These two guide bars are mounted between the side walls 22ª of the machine frame, as shown for the front guide bar in Fig. 9. Each rack bar carries a double-armed pawl 56 pivotally attached to it intermediate the ends of the bar. The pawl is spring-controlled (not shown), tending to turn counterclockwise and normally resting against a stop pin 85 provided on the rack bar. The stopping tooth 57 of the pawl is disposed to engage the ratchet teeth 58 provided in the lower edge of a stop slide 59, one slide appertaining to each rack bar 42. The ratchet teeth 58 are arranged in their order from the front to the rear of the machine so that they are respectively assigned to the numeral symbols "0" (near the first end) followed by "9" to "1." Each slide 59 is longitudinally slidingly disposed on transverse bars 60 in a manner similar to that explained with respect to the mounting of the rack bars 42 so that each slide runs parallel to its rack bar 42 and can move slightly in the same direction as the latter. Each slide 59 is spring-controlled by means of a spring 63 attached at one end to the front of the slide and at the other end to a common transverse bar 63ª which rests within a transverse angular bracket 62. This brack tends with its shank 66 downwardly into a 65 of each slide, so that when the appert spring 63 comes into effect, the slide is with its recess edge 64 against the shank bracket 62. Each slide 59 is further pr at its rear end with a stop 67 which sta line with the rear edge 68 of the horizontal of bracket 62, so that when the slide is forward in the machine a given distanc 67 will abut against the bracket edge 6 thus limit the forward motion of slide 59 a the tension of its spring 63. Lastly, eac 59 carries at its forward end a spur 59ª w of such a length and disposed in such a m that when its appertaining slide 59 is mov its extreme forward position, the end o 59ª engages between two adjacent teeth s 50ª of pinion 50, thereby positioning this so long as slide 59 remains in its extreme f position. The rear position (right han tion in Fig. 7) of each rack bar 42 is pr at its upper edge for a short distance with et teeth, which are disposed to engage calc or other transferring means not shown h

The rearwardly pointing tooth 69 of pawl 56 extends normally beyond the uppe of its rack bar 42, as shown in Fig. 7. versely of all rack bars 42 are arranged a of plates 70 through 79, which are shown i elevation in Fig. 5. One plate is assigned t of the numeral symbols "0" to "9." The as shown in Fig. 7, are spaced one from th and are slidingly mounted on common r provided with circumferential grooves 7 for each slide. This clearly appears from 5 and 7. Each of plates 70 to 78 is provi its lower edge with teeth 81 forming inte spaces 70ª between the teeth of sufficient for pawl tooth 69 to slide through it. The ber of teeth and interstitial spaces is e the number of rack bars 42 provided. A slides 70 to 78 is mounted a stop plate 79, is not movable on supporting rods 72ª, a lower edge of which is not serrated bu with the lower edge of teeth 81 of slides 7 as clearly shown in Fig. 5. In other wor lower edge 80 of stop plate 79 covers trans of bars 42 all teeth and interstitial spa the slides. Each transverse slide is pulled individual spring 82 until its right-hand en tion (see Fig. 5) abuts against a stop pin 82 mon to all slides. The stop plate 79 afor tioned serves as a control means for the r ing of a "0" in a manner to be described Sliding plates 70 through 78 and stop pl are spaced apart in such manner that th sum of their spacings, and including the di of nose 69 of pawl 56 from the first sliding 70, corresponds with the sum of the ten which the rack bar 42 can perform by vi the ten ratchet teeth 58 provided in the described slides 59.

As shown more clearly in Figs. 5 and 2, plates 70 to 78 are connected by means o vidual pull bars 87 with a corresponding n of individual coupling elements 87ª, sho Figs. 1 through 4. As shown in these f these coupling elements are individualy m on two vertical parallel rocking levers 97 a pivotally supported on studs 99 attached lower end of a transverse plate 6. This is shown in Figs. 3 and 4. Levers 97, 93 o coupling element engage these aforemen studs with their forked ends, so that these

pling elements can swing in the direction of arrow 170 in Fig. 4. Each pull bar 87 aforementioned engages, with its notched end 83, the pin 100 of its respective coupling plate 87[a], and at its other end each bar engages in similar manner respectively the pin 100[a] of the corresponding transverse slide plates 70 to 78, as shown in Fig. 2. Each of the coupling plates 87[a] is provided with an upwardly extending detent. These detents are denoted by 88 through 96 in Figs. 3 and 4, and each detent is disposed transversely of the machine at a different place, as shown in Fig. 4, so that each detent of a plate 87[a] is alined with one of the key bars 4, which are shown in Fig. 4 in cross section. Detents 88 through 96 are respectively provided with inclined edges 101 through 109, which are located in line with the slots 5 of transverse plate 6 in which the key bars 4 are guided, so that these inclined edges become located in the path of the key bars when the latter are depressed. Thus, if a key bar is depressed it engages the inclined edge of its appertaining detent and thereby moves the appertaining coupling plate 87 to the right in Fig. 4. This motion is transmitted through the corresponding pull bar 87 to its slide plate of the group 70 through 78 in Fig. 2.

Transverse supporting plate 6, as shown in Figs. 3 and 4, is further provided in its lower central portion with three slots 110, 111 and 112 in which the key bars 113 through 115, which carry the keying heads 118 through 120 respectively, are guided. These key bars are located underneath the keys 1 through 9, but extend further toward the operator, as shown in Figs. 1, 3 and 4, and carry the designations "0", "00" and "000" respectively. Key bars 113 through 115 are pivoted on a common axle 116 and controlled by individual springs 117, as shown for one bar in Fig. 3, so that these key bars will normally rest against the tops of their respective slots 110 through 112 in Fig. 4. Key bar 113, as shown in Fig. 3, carries an upwardly extending detent 121 which extends with its inclined edge 122 over the previously mentioned transverse bar 14 of bail 15, 17, so that when key bar 113 is depressed it will actuate the bail in the same manner in which it is actuated by each of the key bars of keys 1 through 9 aforedescribed. Key bars 114 and 115 each carry a downwardly extending detent 123, 124, each of which is provided with an inclined edge 125, 126 respectively. These inclined edges, on depression of the aforementioned keys, bear against pins 127, 128 respectively of levers 129, 130 which are fixed on axles 131 and 132 journalled in frame 22, as shown in Figs. 3 and 7. In this manner, for instance, when key bar 111 is depressed, the inclined edge 125 of its detent 123 engages pin 127 and thus rocks the appertaining lever 129 and its axle 131 counterclockwise. The same action occurs with respect to lever 130 when key bar 112 is depressed. As shown in Figs. 7 and 9, on axles 131 and 132 are fixed, respectively, upwardly extending levers 133 and 134 which are each connected respectively by a push bar 135, 136 to the previously mentioned levers 27 and 28 pivotally mounted together with the lever 26, also previously mentioned, on the common vertical pivotal stud 29. In Fig. 9, all three levers pivoted on stud 29 are shown in line, and therefore only top lever 26 is visible. In Fig. 9 there are therefore shown three reference numerals 25, 27, 28 at the right-hand side of pivot 29, and three numerals 33, 139, 140 at the left of Fig. 9, indicating that there are three double-armed levers in line, one underneath the other. Levers 27 and 28, as shown in Fig. 7, are spaced vertically so that they can abut with their edges 137, 138 respectively of their arm portions 139, 140 (see also Fig. 9) against the ends 141, 142 of rockers 143, 144 respectively when these ends are moved into the path of the levers. A pair 141, 142 of these rockers is assigned to each locking rocker 36 and pivotally attached together with the appertaining control rockers 35 aforedescribed to the downwardly extending arm 145 of the locking rocker 36. As shown in Figs. 7 and 8, the locking rocker 36 for each of the digits carries attached to its arm 145 a control rocker 35 and a rocker 143 and 144, the latter as aforedescribed being operable respectively by the levers 27 and 28. The several arms 39, 145 and 147 of each locking rocker 36 are guided respectively in the fixed slotted plates 190, 148 and 147[a], so as to prevent lateral movements of these rockers. Rockers 143 and 144 of the highest digit are provided with elongated holes 148, 149 respectively, through which they are guided by means of pins 150, 151 fixed on the side wall 22[a] of the machine. Thus the oscillation of these two last-named rockers on their pivots on arm 145 depends in the first digit only upon the rocking motion of the appertaining locking rocker 36, and they are not influenced by any of the control rockers 35 of the system. Control rocker 35 and rockers 143 and 144 of the highest digit, therefore, always rest with their end surfaces 34, 141, 142 (Fig. 7) close to the edges 32, 137, 138 of levers 25, 27, 28 respectively, ready for operation by the latter.

As shown in Fig. 8, control rocker 35 of each digit is coupled to the rocker 143 of the next lower digit by means of a bar 35[a] and a pin and slot connection 152, 153. Also, the rear end of each rocker 143 is pivotally coupled to the rear end of the rocker 144 of the next lower digit by means of a pin and slot connection 154, 155 and coupling bar 145[a]. In normal or resting position of the machine, we thus have a relative position of the different operating elements, in which the elements 35, 143, 144 of the highest digit are always ready for immediate operation as soon as the respective levers 25, 27, 28 are actuated in the manner described hereinbefore, and further the rockers 143, 145 of the next lower and the rocker 144 of the second next lower digit are similarly in operative position in front of the edges 137, 138 of their respective common levers 27, 28. The forwardly extending arms of the rockers 35, 143, 144 of all digits are laterally guided in a slotted fixed transverse guide 156, shown in Fig. 7. The rearwardly pointing arms of all rockers 143, with the exception of the rocker 143 of the first digit, abut in their operating position with their upper edge 157 against the inside of shank 158 of a fixed angle plate 159 arranged transversely to the rockers in the machine frame. In Fig. 7, the control rocker 35 of the first digit, the rockers 143 of the first and second digits, and the rockers 144 of the first, second and third digits are shown in position ready for operation with their appertaining levers 25, 27 and 28, while the rocker 143 of the third digit is shown in inoperative position with respect to its actuating lever 27. Each rack bar 42 carries at its rear end a locking detent 160 (Figs. 7 and 8) which extends from the rack bar of each digit to and in front of the control rocker 35 of the next lower digit, which rocker it engages by means of the upwardly extending arm 161 of that rocker. In this manner, each rack bar 42, when in normal inoperative

position as shown in Figs. 7 and 8, thereby lifts the control rocker **35** of the next lower digit clockwise against the tension of the spring **37** of the latter, so that this rocker is placed into the position shown in full lines in Fig. 7 and such as is shown in Fig. 8 with respect to the second, third and fourth digits. Control rocker **35** of the first or highest available digit has no such lifting means and should always remain in the position shown in Fig. 8 and shown in dotted lines in Fig. 7. namely, with its end **34** directly in front of its appertaining operating lever **25**. All other lower digit control rockers, however, are lifted out of the range of operating lever **25**, and cannot be actuated when the latter is operated to record a desired numeral in the first digit in window **53** of the accumulator.

It will further clearly appear from Fig. 8 that as soon as the rack bar **42** of the first digit has been moved to the left to produce a numeral record, its locking detent **160** is removed from the arm **161** of the control rocker **35** of the next lower digit so that this control rocker, under the tension of its controlling spring, moves counterclockwise into a position in which its left-hand arm comes within operating range of operating lever **25** in Fig. 7, so that if this lever is operated again by depressing either the same key again, or any other key, this second control rocker is actuated by lever **25**. Also, as soon as the control rocker **35** of the second digit has swung counterclockwise as just described, its arm **35**[a], which is coupled with the rocker **143** of the third digit, moves this latter rocker down and brings the front edge **141** of this rocker within operating range of lever **27** (Fig. 7) so that if the "00" key is depressed in the second digit, the locking rocker **36** of the third digit is actuated at the same time and thereby releases simultaneously the third digit rack bar **42** to simultaneously record in the accumulator a "0" symbol in the second and third digits.

The operation of the entire mechanism is as follows.

If it is desired, for instance, to first record the numeral "7" as the first digit of a given numeric value, the key bar **4** in Fig. 1, corresponding to the numeral "7", is depressed. Thereby the key bar **4** strikes (see Figs. 1 and 4) the inclined edge **107** of detent **94** of the appertaining coupling bar **87**[a] and shifts this bar to the right in the direction of the arrow **170** in Fig. 4, thereby operating the appetraining pull bar **87** and (Fig. 2) the corresponding slide **75** (see also Fig. 10) so that this latter slide moves to the right in Fig. 5 whereby its teeth **81** moves in line with the interstitial spaces **70**[a] of the remaining slides, it being assumed that in normal position all slides are positioned so that their respective teeth and interstitial spaces are in alinement. Thus the tooth **81** of the seventh slide moves into the path of nose **69** of double pawl **56** attached to the first digit rack bar **42**, and therefore the clear path for nose **69** through the appertaining interstitial spaces of all slides is interrupted at the seventh slide. At the same time, when the aforementioned key bar **4**, denoting numeral "7", is depressed (Fig. 3), its inclined edge **13** of detent **12** engages the bar **14** of bail **15** and swings the latter in the direction of the arrow **171** in Fig. 3. Thereby, through the pin and fork coupling aforedescribed, levers **20** and **23** (Figs. 3, 7, 9) partake in this rocking motion in clockwise direction. Thereby lever **25** is rocked in Fig. 9 in the direction of the arrow **172**, whereby edge **32** of its opposite arm **33** engages the end **34** of control rocker **35** of the first digit, which scribed before is always in ready-operating tion and shifts this lever bodily to the thereby rocking its locking rocker **36** co clockwise so that the arm **39** of the latter be disengaged from the recess **41** of the first rack bar **42**, allowing the latter to be thro the left in Fig. **7** through the action of its **45**. In order that the end **40** of rocker a is sure to be entirely removed from rece even in case the key should be only very depressed, the inclined cam surface **44** is vided at the rear edge recess **41**, by whic clined surface the arm **39** is thrown entirely of bar **42** and slides along the lower edge rack bar **42** when the latter is thrown to th This will rock locking rocker **36** sufficien operate the remaining elements **35**, **143**, **14** which it is connected. Of course, with a n fairly strong touch of the keys by the ope this precaution does not come into effect so ually, because then arm **39** will fly out a sufficiently far by itself. If thus rack b of the first digit, for which the numeral "7 been keyed, flies to the left, the nose **69** double pawl **56** travels (see Fig. 10) clear th all appertaining interstitial spaces of s plates **70** through **75**, but it engages a tooth plate **76** which, as described hereinbefore been moved into its path when the key fo meral "7" was depressed. Thereby double **56** is rocked suddenly clockwise and its to at the other end at that moment engag ratchet tooth **58** which corresponds with th enth position of the ratchet toothing of sli Thereby rack bar **42** is stopped in its pat while travelling the distance up to the se tooth has turned pinion **50** and thus its nu disc **51** sufficiently to show numeral "7" in down **53**. When tooth **57** of double pawl **5** engages slide **59** and is stopped by the latt momentum throws this slide **59** a short di to the left against the tension of its spri sufficiently to cause spur **59**[a] to enter betwee teeth of pinion **50**, thereby positively setti latter in a position in which its appertainin meral disc shows the numeral "7", and pre ing it from being overthrown. While sli is thus moved a very short distance forward left within the limits determined by its sto tent **67**, its spring **63** is tensioned and thu as a cushion for the stopping of rack bar **4** lessens the impact of stop **67** against ed of angle bar **62**. Fig. 10 shows the rack b adjusted to show numeral "7" in windo while Fig. 7 shows the rack bar still in no retracted position.

When locking rocker **36** of the first di moved counterclockwise by the operation mechanism just described, so that its lowe **145** moves rearwardly, its rockers **143**, **144** take in this rearward motion in Fig. 8, wi thereby producing any effect on account slot and pin connection **154**, **155** at **143**. rack bar **42** of the first digit has moved fo to record the desired numeral "7" in the first the locking detent **160** attached to this rac and extending over to the control rocker the second digit is moved out of the way o **161** of the latter rocker. Thereby this c rocker **35** under the tension of its apperta spring **37** is moved counterclockwise, and th its forward end **34** in Figs. 7 and 8 is mov front of the edge **32** of lever **25** into read erating position, so that when lever **25** is act with the depression of the next key, this c

rocker of the second digit will be encountered and release the locking rocker 36 of the second digit. When this control rocker 35 is thus released and turns counterclockwise, the rocker 143 of the third digit, which is coupled with control rocker 35 of the second digit by means of bar 35ª as described, partakes in this counterclockwise motion, and likewise the rocker 144 of the third digit, which as described before is coupled by means of bar 145ª with rocker 143 of the second digit, partakes in this rocking motion of rocker 35 of the second digit, whereby also the front edge 141 of rocker 143 of the second digit and the front edge 142 of rocker 144 of the third digit are placed within operating range of their respective levers 27, 28 in Fig. 7, ready to be acted upon by these levers in case they are operated. Thus the rocking motions of certain of these elements of one digit, as described, are propagated to certain desired elements of the next and second next lower digits. In Fig. 8, this propagation is shown as extending only over the first three digits, assuming that the largest number of "0" symbols that may be simultaneously keyed is "000."

If now in Fig. 1 the key 118, representing a single "0," is depressed, its key lever 113 engages, with its inclined detent 122 in Fig. 3, the bail bar 14 and rocks it in the direction of the arrow 171, and thus the second rack bar 42 is released in the same manner by way of levers 20, 23, 24, 25 in Figs. 7 and 8, as has been described with respect to the recording of the numeral "7" of the first digit, the bar 42 of this first digit still remaining in released position (Fig. 10) in which its locking bar 160 in Fig. 8 has released the control rocker 35 of the second digit so that it is in ready operating position to actuate the locking rocker 36 of the second digit as soon as the "0" key for the second digit is depressed. When this occurs, the bar 42 of the second digit will be thrown forward, and since in keying a single "0" none of the serrated sliding plates 70 through 78 in Fig. 7 had been transversely moved, the teeth and interstitial spaces of all of these plates remain respectively in alinement and the nose 69 of double pawl 56 has a clear path to slide through all interstitial spaces until it abuts against plate 79, which as described before and as is shown in Fig. 5 has no teeth and interstitial spaces and is fixed. Therefore, the rack bar 42 can advance unhindered to the left in Fig. 7, and thereby the pinion 50 of the second digit is turned sufficiently far so that its numeral disc 51 will show a zero in the window 53 when nose 69 of pawl 56 engages zero plate 79 and moves its pawl clockwise. Therefore, at this moment tooth 57 of pawl 56 engages the last left-hand tooth of the ratchet 58 and thereby throws slide 59 to the left until its spur 59ª engages between two teeth 50ª of pinion 50 of the second digit numeral disc, thereby locking it in "0" indicating position, the same as was described with respect to the indication of numeral "7" in the first digit.

When control rocker 35 of the second digit in Fig. 8 is thus actuated, rocker 143 of the third digit has already been moved into ready operating position by bar coupling 35ª between the second and third digits due to the actuation of the rack bar 42 of the preceding (first) digit which allowed control rocker 35 of the second digit to swing into operative position. Therefore, if in place of a single "0" in the second digit, the operator desires to introduce "00" into the machine simultaneously, one "0" in the second digit and the other "0" in the third digit, he would depress, instead of the "0" key 118, the "00" key 119 in Figs. 1 and 3. In that case the inclined surface 125 of detent 123 attached to the key bar 114 of that key actuates the pin 127 of lever 129. This causes levers 129 and 133 (Figs. 7, 9, 3) to rock in the direction of the arrow. Lever 133 through its pull bar 135 actuates horizontal lever 27 in the direction of the arrow 172 in Fig. 9, which brings the edge 137 of this lever into engagement with the end surfaces 141 of rockers 143 of the second and third digits, which have been brought into its operating range in the manner aforedescribed. Thereby not only locking rocker 36 of the second but also that of the third digit is actuated simultaneously, and the rack bars 42 of both digits are released and fly to the left under their spring pull. The double pawls 56 of both rack bars find the path through all sliding plates 70 through 78 clear until their noses 69 abut against the common fixed zero plate 79 in Fig. 7. Thus the second and third digit pinions 50 and the appertaining numeral wheels 51 are turned simultaneously far enough to show a "0" in window 53 at the same time for the second and third digits. Thus after a "7" had been indicated in the first digit, "00" are indicated in the second and third digits. When the third digit rack bar 42 moves forward, its locking bar 160 in Fig. 8 releases control rocker 35 of the fourth digit and allows it to move in ready operating position so that the operator can now press the key for any desired single numeral value to appear in the fourth digit in the window 53. Accordingly, the elements 35, 143, 144 of the fourth, fifth and sixth digits now assume the positions which were assumed by the corresponding elements for the first, second and third digits before the "00" recording described hereinbefore had occurred.

Further, if instead of "00" the operator desires after keying the first digit to simultaneously key "000" for the second, third and fourth digits, he depresses, instead of the "00" key, the "000" key, this causes the fourth digit rack bar 42 now also to be simultaneously thrown forward together with the second and third digit bars, and thus "000" will simultaneously appear in window 53 in the same manner as described before, because in this case, by depression of key 120 in Fig. 1, the key bar 115 has also actuated, by way of levers 130, 134 and bar 136, the lever 28 together with levers 25 and 27, and thereby engaged the front end of rocker 144 of the fourth digit by which the locking rocker 36 of that digit is moved to release its rack bar 42 to allow it to advance to "0" indicating position. Rocker 144 of the fourth digit is within operating range of lever 28 because, as will be noted, the rear end of this lever is coupled by its bar 145ª to the rear end of rocker 143 of the third digit, and the front end of that rocker is coupled by its coupling bar 35ª to control rocker 35 of the second digit. The latter rocker, having been released into operating position by the actuation of rack bar 42 of the first digit, thus lowers rocker 143 of the third digit and rocker 144 of the fourth digit into operating position. If this arrangement is extended sufficiently far beyond what is shown in Fig. 8, it is of course possible to simultaneously indicate even more than "000" by depressing an additional key or keys which would have to be provided on the keyboard in

Fig. 1 with the necessary additional lever systems such as **130** and **134** in Figs. 3 and 7.

After the desired numeric value has thus been recorded in the window **53**, all operated rack bars **42** can be returned to normal position by means of a releasing bar **503** (Fig. 7) attached to a rocker **500**, conventional means not shown here, so that the locking rocker **36** of each bar causes its arm **39** to reengage the recess **41** of it taining bar and hold the latter in norm tion shown in Fig. 7. This reengagem returns all rockers connected with rock normal position. The rocker **500** is mounted to an arm **501** projecting from ing shaft **502** of the machine.

JOHANNES SOB

PUBLISHED

MAY 25, 1943.

BY A. P. C.

J. SOBISCH

DECADIC KEYING MECHANISM FOR ACCOUNTING MACHINES OR THE LIKE

Filed June 14, 1939

Serial No. 279,077

7 Sheets-Sheet 1

Fig.1.

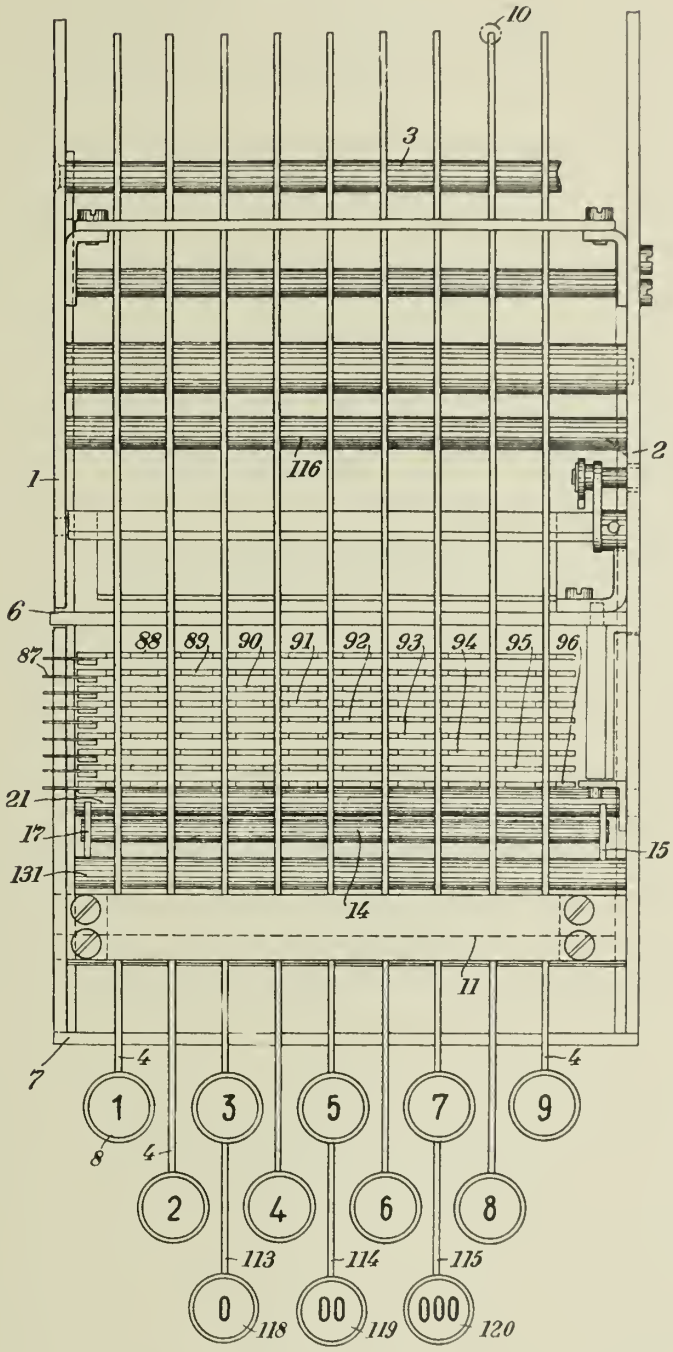

INVENTOR

BY Johannes Sobisch

Wright Brown

ATTORNEYS

PUBLISHED

MAY 25, 1943.

BY A. P. C.

J. SOBISCH

DECADIC KEYING MECHANISM FOR ACCOUNTING MACHINES OR THE LIKE

Filed June 14, 1939

Serial No. 279,077

7 Sheets-Sheet 2

Fig. 2.

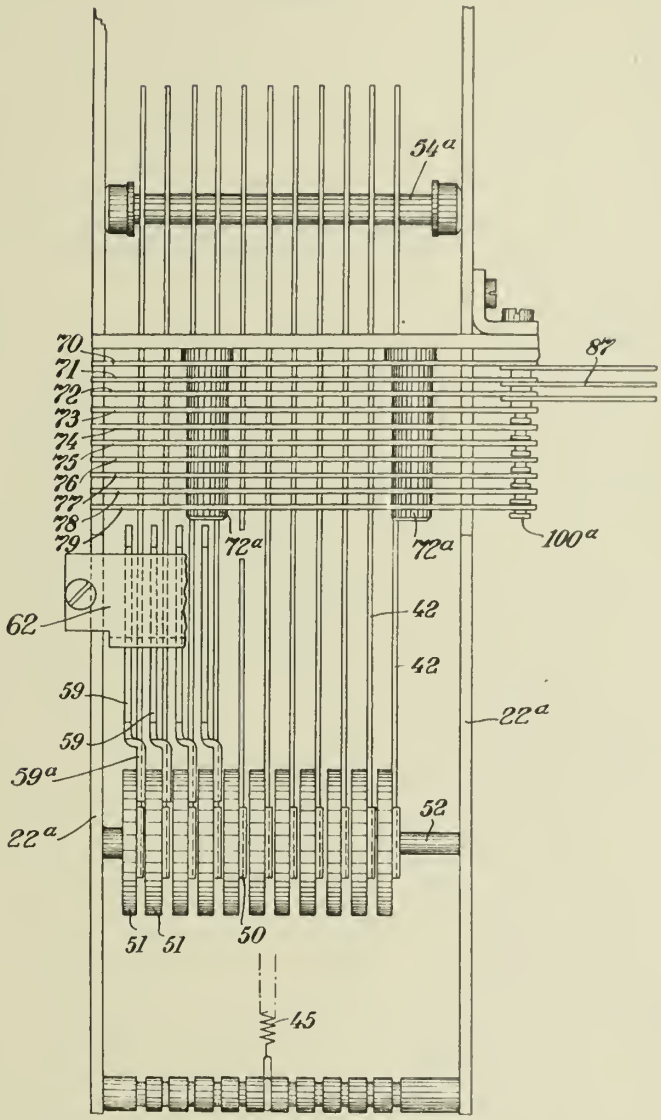

INVENTOR

BY Johannes Sobisch

Wright Brown & Quinby

ATTORNEYS

PUBLISHED

MAY 25, 1943.

BY A. P. C.

J. SOBISCH

DECADIC KEYING MECHANISM FOR ACCOUNTING MACHINES OR THE LIKE

Filed June 14, 1939

Serial No. 279,077

7 Sheets-Sheet 3

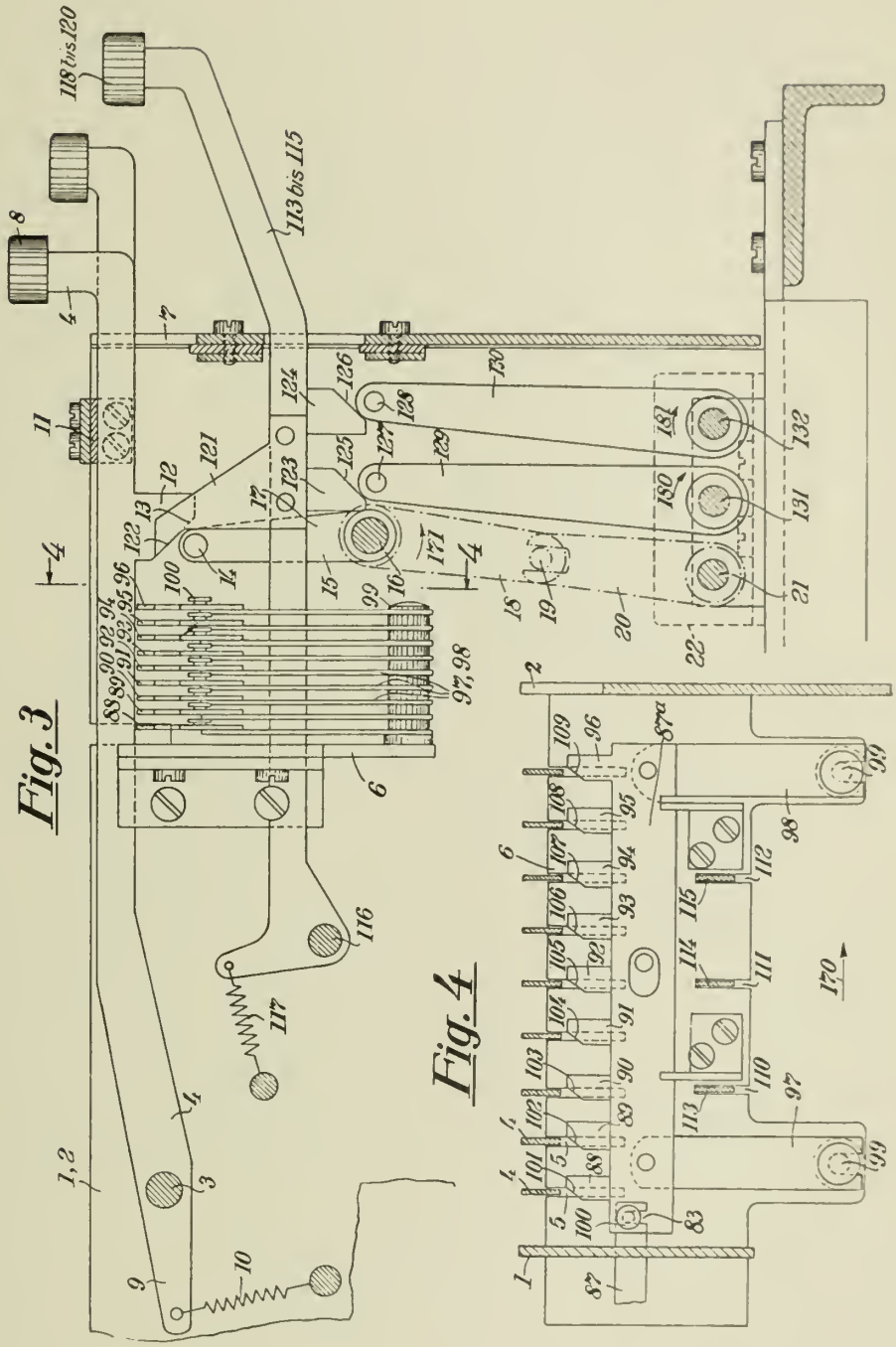

INVENTOR
Johannes Sobisch
BY
Wright & Barr
ATTORNEYS

PUBLISHED

MAY 25, 1943.

BY A. P. C.

J. SOBISCH

DECADIC KEYING MECHANISM FOR ACCOUNTING MACHINES OR THE LIKE

Filed June 14, 1939

Serial No. 279,077

7 Sheets-Sheet 4

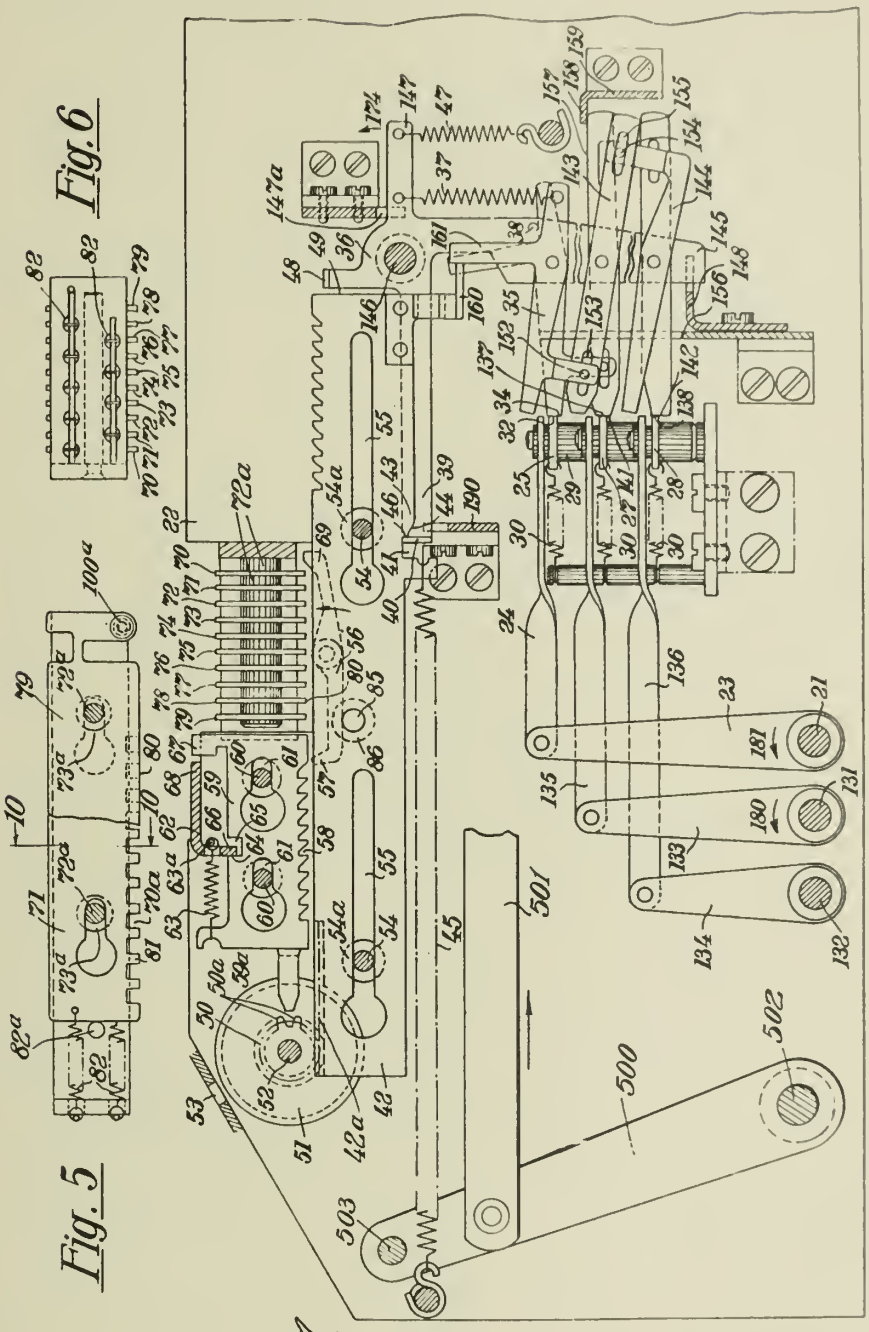

Fig. 6

Fig. 5

Fig. 7

INVENTOR

Johannes Sobisch

BY Wright & Son

and ATTORNEYS

PUBLISHED

MAY 25, 1943.

BY A. P. C.

J. SOBISCH

DECADIC KEYING MECHANISM FOR ACCOUNTING MACHINES OR THE LIKE

Filed June 14, 1939

Serial No. 279,077

7 Sheets-Sheet 5

Fig. 8.

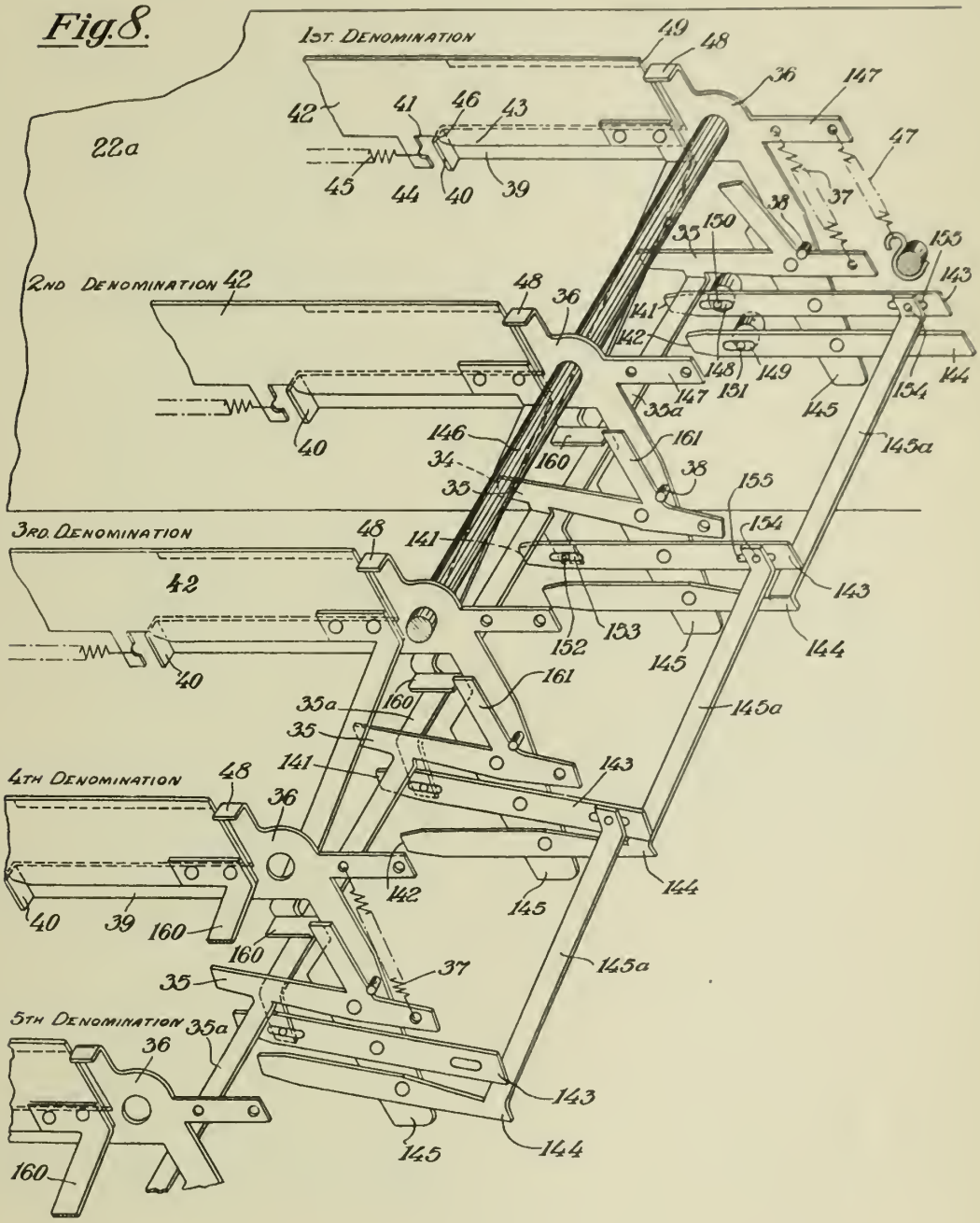

INVENTOR

BY Johannes Sobisch

Murgitroyd & Co

Ass ATTORNEYS.

PUBLISHED

MAY 25, 1943.

BY A. P. C.

J. SOBISCH

DECADIC KEYING MECHANISM FOR ACCOUNTING MACHINES OR THE LIKE

Filed June 14, 1939

Serial No. 279,077

7 Sheets-Sheet 6

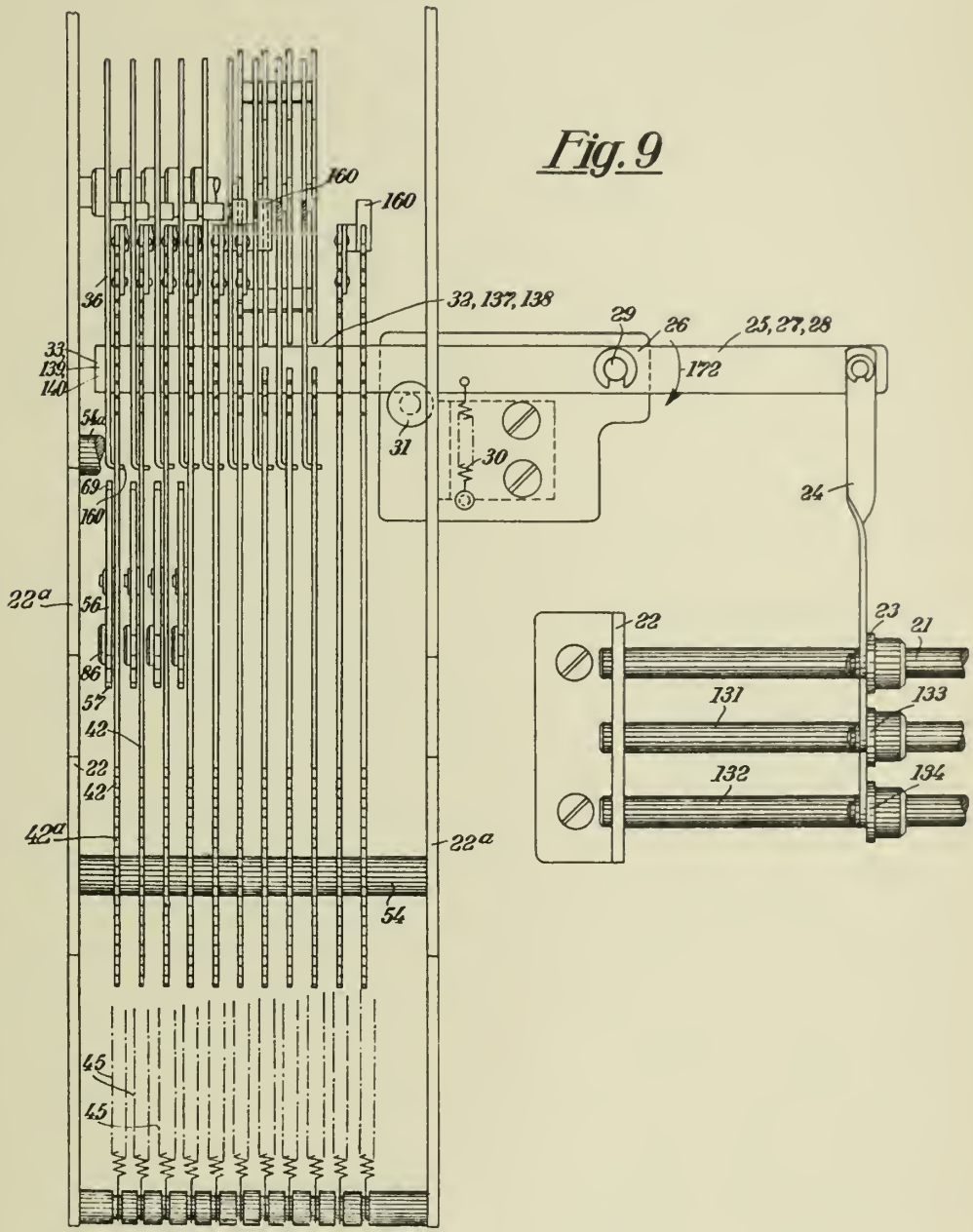

INVENTOR

Johannes Sobisch

BY

Wright & Brown

ATTORNEYS.

PUBLISHED

MAY 25, 1943.

BY A. P. C.

J. SOBISCH

DECADIC KEYING MECHANISM FOR ACCOUNTING MACHINES OR THE LIKE

Filed June 14, 1939

Serial No. 279,077

7 Sheets-Sheet 7

Fig. 10

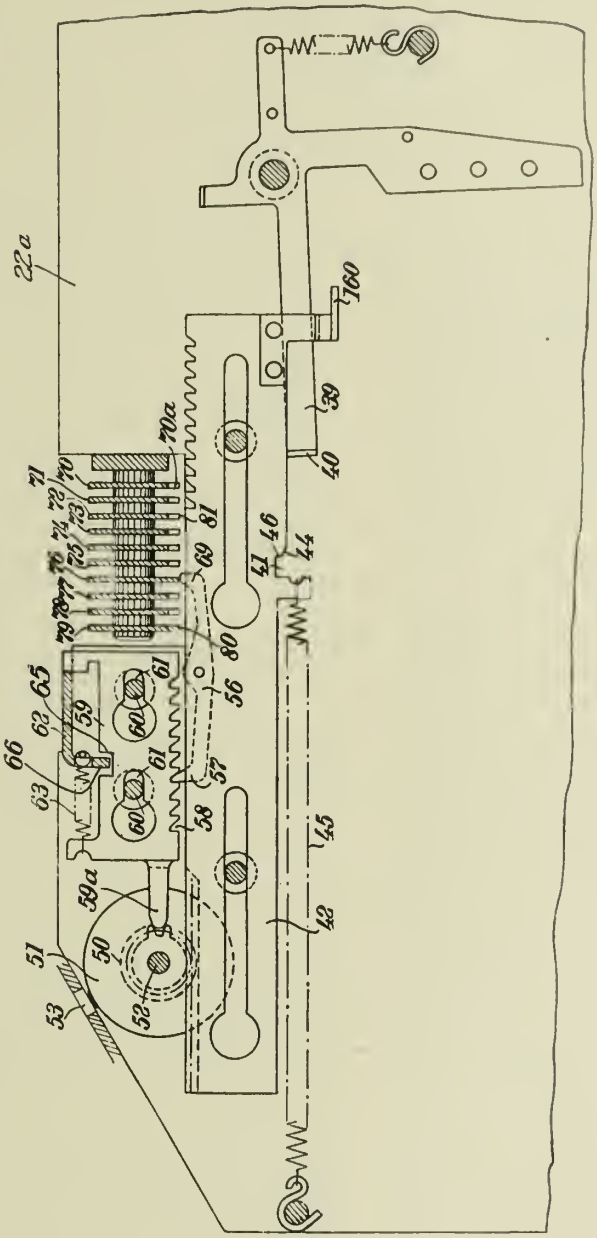

INVENTOR

Johannes Sobisch

BY Meighorner

ATTORNEYS.

Published May 25, 1943

Serial No. 279,533

ALIEN PROPERTY CUSTODIAN

APPARATUS FOR THE PURIFICATION OF LIQUIDS

Sándor Simkovits, Budapest, Hungary; vested in the Alien Property Custodian

Application filed June 16, 1939

The invention relates to apparatus for the purification, particularly for the filtering of liquids, especially of oil, the said apparatus being much simpler, of greater output capacity and greater safety of service as compared to apparatus of a similar kind known up to now.

The filtering apparatus according to the invention is fitted with filtering members arranged in the container intended to accommodate the liquid to be filtered, and through which the liquid to be filtered is driven by pressure or drawn by suction. The substance of the invention consists in that the filtering member is composed of a single filtering drum, or of a plurality of filtering drums, provided in the container, preferably in the vicinity of the bottom of the latter, a pipe for the discharge of the filtered liquid, projecting into the interior of the drum or drums, being connected to the said drum or drums.

The advantages of the arrangement according to the invention are the following:

1. Owing to the arrangement of the drum or drums, not only its or their cylindrical surfaces, but also the end surfaces opposite to each other are representing effective working surfaces, which circumstance assures a high amount of filtering surface.

2. With pneumatic operation, the filter drum or drums will remain active until the level of the liquid sinks below the upper end surface of the said drum or drums.

3. The active surface of the filtering members will be considerably increased, and, moreover, the inactive space will be substantially reduced. It is well-known, that in the case of apparatus of this kind, inactive space is represented by that part of the vessel which is situated below the plane laid through the highest point of the filtering body.

The increase of the filtering surface will also cause the necessary frequency of cleanings to be substantially reduced as it will be possible for the impurities to become distributed over a larger surface.

4. In the case of the filter according to the invention, the discharge of the filtered liquid is effected in a very simple manner by means of a single pipe issuing into the filtering drum or drums. In connection herewith the complicated system of ducts provided in the lid of the container in the types of apparatus employed up to now, through which system of ducts the various filtering pipes communicated with the common discharge pipe, can be dispensed with.

The invention is equally applicable for filtering apparatus in which the liquid is driven through the filter by means of compressed air, and for apparatus in which this is done by means of liquid pressure. In the case of apparatus of the last-named type, it is also possible, in order to increase the filtering surface, to provide additional cylindrical or flattened filtering pipes on the filtering drum, the said pipes starting from the lid plate of the filtering drum and being arranged, preferably spaced uniformly, around the pipe for the discharge of the filtered liquid, it being also possible for the said additional pipes to extend as far as to the lid of the container.

It is, however, also possible to effect filtering by suction.

The accompanying drawing illustrates a number of embodiments shown by way of example, viz.:

Fig. 1 is a vertical section of an embodiment in which the liquid to be filtered is driven through the filtering drum by means of air pressure acting on the level of the liquid, it being also possible to replace the pressure effect by a suction effect.

Fig. 2 is a vertical longitudinal section of another embodiment in which the liquid to be filtered is driven through the filtering drum by the gauge pressure of the liquid delivered under pressure into the container.

Fig. 3 is a horizontal section along line I—I of Fig. 2.

Fig. 4 is a vertical section of an embodiment in which two filtering drums fitted with scrapers are employed.

On Fig. 5 the circulating device mounted into the container when boiling the liquid is represented during use.

The container **1**, which is closed in an air-tight manner by the lid **3** (Fig. 1) is filled, e. g. up to the height indicated on the drawing with the liquid to be filtered. Through the branch **2**, fitted with a non-return valve not shown on the drawing, compressed air is delivered into the container. In the container **1** a filtering drum **5** is suspended at a certain distance from the bottom of the container, so that not only the cylindrical surface of the said drum but also its bottom and top surface are representing active working surface. The height of the filtering drum amounts preferably to a fraction, at most to one-third, e. g. to one-fifth or one-sixth of the height of the container **1**. The filtering drum **5** is surrounded in a known manner by a filtering cloth **6**, which receives the coarser impurities.

The filtering drum **5** preferably possesses the form of a flat cylinder, or a prism, or of a hollow

body of any desired shape, which may also be oval and the height of which is smaller than its smallest dimension measured at right angles to its longitudinal axis.

According to Fig. 1, the drum 5 is suspended on the central discharge pipe 7, e. g. in such a manner that the branch 9 of the said pipe, which projects into the drum, is screwed into the sleeve 8.

Under the action of the pressure of the compressed air or liquid, introduced through the branch 2, or of the vapours produced when heating the liquid, e. g. oil, to be filtered, the level of the liquid contained in the container 1 will gradually sink, the liquid will pass through the walls of the filtering drum 5 into the interior of the said drum, and the filtered liquid will be discharged in the direction of the arrows through the branch 9, and through the pipe 7.

The embodiment according to Figs. 2 and 3 differs from the one according to Fig. 1 in that filtering pipes 10, of e. g., circular cross-section, and of any desired height, extending, say approximately up to the lid 3, are branching off from the filtering drum 5, the said pipes being arranged, preferably uniformly spaced, around the pipe 7. Each of the filtering pipes 10 is covered by a filtering cloth 11. The container 1 is filled with the liquid delivered into it under pressure through the branch 2, the said liquid being, owing to the pressure above the atmospheric, driven through the filtering pipes 10 and through the filtering drum 5. The filtered liquid is discharged in the direction of the arrow through the pipe 7.

In the case of all embodiments, the shape of the drum 5 may, of course, also differ from the shapes represented on the embodiments illustrated.

In the case of the filtering apparatus according to Fig. 4 two filtering drums 5, 5 ai vided in order to increase the output capa the apparatus. Any desired number of may, in fact, be provided. The apparat cording to Fig. 4 differs from the one acc to Fig. 2 also by the provision of scraper b cleaning the filtering drum, which are m on the pole 15 and may be operated, for in by means of a handle 16. The pole 15 is r ed in a manner tight against leakage be the drum bottom and above in the pipe 7 scraper device 14 may also be operated pressure so that, for the purposes of clear is not necessary to dismantle the appara

If oil is to be filtered, and particularly contaminated by a substantial quantity of the oil should, before filtering, after the r of the lid 5 and of the filtering drum 5, f boiled. For this purpose use is made of t culating device represented on Fig. 5, whic sists of a vessel 19 with perforated bott and is supported by means of legs 20 bottom of the container 1. On the bot the vessel 19 a lid 21, fitted with legs serving for covering the bottom holes 18 ported.

When the container filled with oil and eq with this circulating device is heated, the lation of liquid indicated by means of arr Fig. 5 is set up. This circulation preven possibility of the water contained in the coming evaporated suddenly and spurting Thereby it will be possible to avoid, on t hand, losses, and, on the other hand, any of fire. A duct 23, running around the drical shell of the container 1, and fitted spout 24 is provided for catching any o might be carried over after all.

SÁNDOR SIMKOV

PUBLISHED
MAY 25, 1943.
BY A. P. C.

S. SIMKOVITS

APPARATUS FOR THE PURIFICATION OF LIQUIDS

Filed June 16, 1939

Serial No. 279,533

2 Sheets-Sheet 1

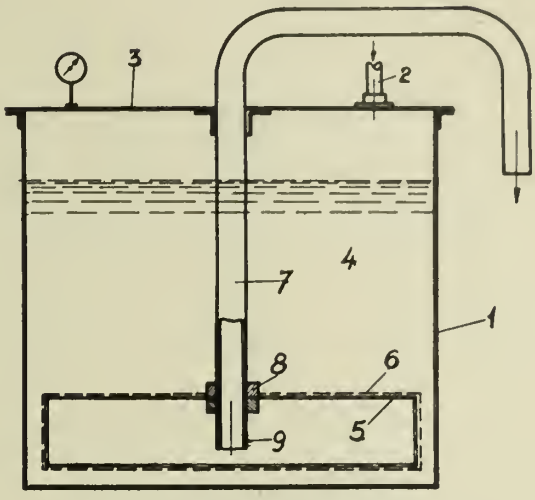

Fig.1

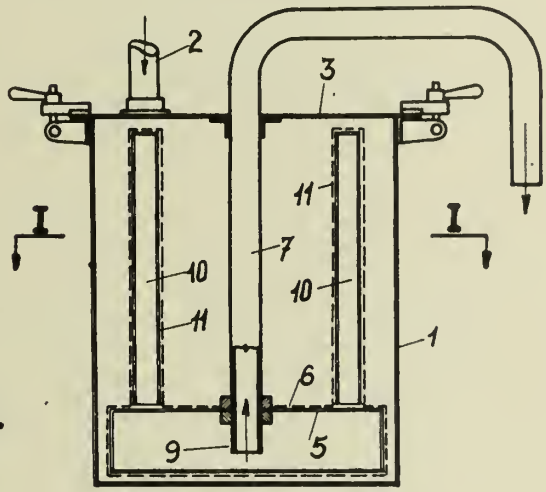

Fig.2

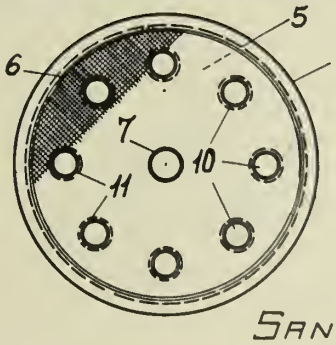

Fig.3

I-I

SANDOR SIMKOVITS
INVENTOR
BY Joseph J. Guhard
ATTORNEY

PUBLISHED
MAY 25, 1943.
BY A. P. C.

S. SIMKOVITS
APPARATUS FOR THE PURIFICATION OF LIQUIDS
Filed June 16, 1939

Serial No. 279,533
2 Sheets-Sheet 2

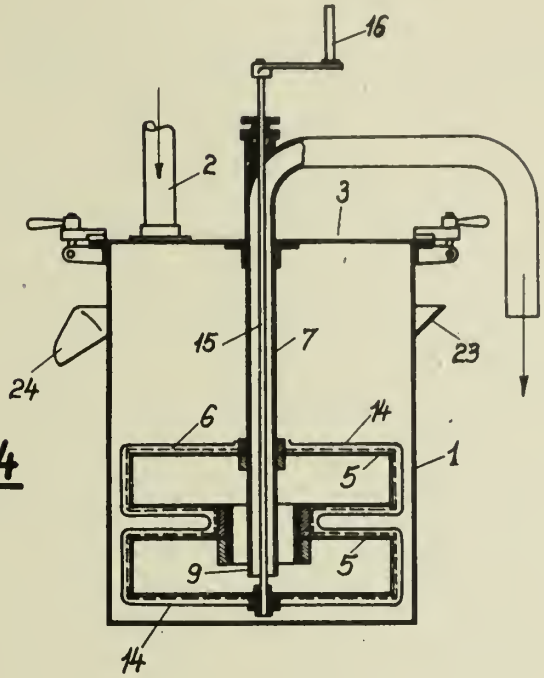

Fig. 4

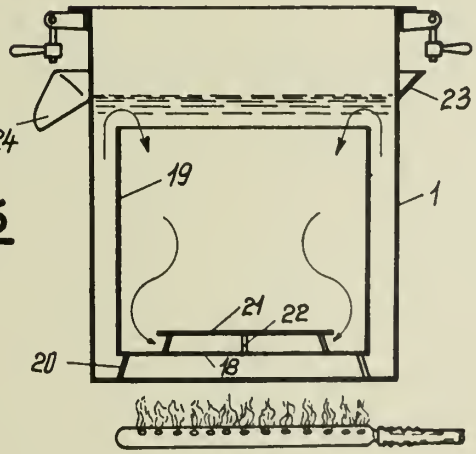

Fig. 5

SANDOR SIMKOVITS
INVENTOR
BY Joseph J. Juhasz
ATTORNEY

Published May 25, 1943 Serial No. 279,774

ALIEN PROPERTY CUSTODIAN

KNIFE HANDLES

Paul Jansen, Solingen, Germany; vested in the Alien Property Custodian

Application filed June 17, 1939

The present invention relates to improvements in knife handles and methods of forming the same, and has for an object to provide an improved handle and tang fastening particularly for long knives.

Heretofore, in the case of long knives having long tangs, the handle has generally comprised separate plates affixed to opposite sides of the tang; or the handle was grooved along its upper edge to receive the knife tang downwardly into such groove, the tang being then fastened in the groove of the handle by means of rivets or the like.

In accordance with the present invention, the handle is made with an internal bore which is closed on all sides by the original integral wood of the handle and is open at the ends of the handle only. This construction is made possible by first boring the handle longitudinally to provide a substantially central rounded bore. The bore is then widened on both sides by means of a scraping cutter or the like, to form slits at opposite sides of the round central bore, which slits receive the flat knife tang of corresponding cross-section. In this way the knife tang is inserted in an end of the handle and passed entirely through the handle having such closed bore and slits. The handle thus entirely surrounds the knife tang over its entire length and on all sides without any gaps.

With the foregoing and other objects in view, the invention will be more fully described hereinafter, and will be more particularly pointed out in the claims appended hereto.

In the drawings, wherein like symbols refer to like or corresponding parts throughout the several views.

Figure 1 is a fragmentary perspective view, with parts broken away and parts shown in section of an improved knife handle constructed in accordance with the present invention.

Figure 2 is a fragmentary perspective view of the knife and the knife tang with parts broken away and parts shown in section.

Figure 3 is a side elevation with parts broken away and parts shown in section, of an improved tool for cutting the interior bore in the handle.

Figure 4 is an end view of the same.

Figure 5 shows a fragmentary perspective view, with parts broken away and parts shown in section of a combined knife and its handle showing a modification, and

Figure 6 is also a fragmentary perspective view of a knife and its tank with parts broken away and parts shown in section.

Referring more particularly to the drawings, 1 designates the handle of the knife which preferably consists of wood and is closed on all four sides. However a longitudinal bore 2 traverses the handle, this bore opening out on both ends of the handle. The central portion of the bore 2 is substantially round in cross-section to permit the introduction of a cylindrical mandrel 3 of a scraping cutter having narrow teeth 4 which progress in size from one end to the other of the mandrel 3. The teeth 4 correspond in thickness approximately to the thickness of a knife tang 6.

By means of the scraping cutters 4, the longitudinal bore 2 is shaped into a narrow slot, being narrow in the direction of the flatwise dimension of the handle 1 but said bore 2 being elongated in the edgewise dimension of the handle 1. The round or enlarged portion of the bore 2 is indicated at 5 and is at approximately the central portion of the lengthwise dimension of said slot. In other words the central portion 5 of the slot is enlarged and preferably has a round cross-section but to opposite sides of this central rounded portion are flat wings extending out in opposite directions from the central rounded part 5.

The knife tang 6 is preferably provided, for instance in the swaging process, with reinforcing and guide ribs 7 which correspond substantially with the bore 2 and its rounded central portion 5. When the tang 6 is inserted into the handle 1, the ribs 7 which collectively make up a circle in cross-section fit preferably snugly into the central portion 5 of the bore 2 and the remaining parts of the tang 6 fit preferably snugly into the narrower wings of the slot or bore 2. The tang 6 is accordingly held in the handle 1 over its entire length, whereby a firm attachment of the handle to the knife is assured. If circumstances so require, transverse rivets 8 are passed through the handle and tang in a well known fashion. The free end of the handle 1 may be rounded off at 9 in accordance with the usual practice, the bore 2 showing through this round end 9. If desired the end of bore 2 at the rounded part 9 may be closed by a suitably shaped inset piece or may be covered by a mounted cap. The wings or slits of the bore 2 may be formed in any suitable manner and the form of the bore 2 may be varied. For instance several longitudinal slits or wings, for instance two crossed wings, may be provided; and for this purpose the tang of the knife would have to possess suitably shaped strips applied at right angles. The requisite formed longitudinal bore may be formed by turning the

scraping cutter **3** in the further treatment to the extent of the required amount, for instance 90°. If circumstances so require scraping cutters **4** having teeth arranged in starlike fashion may also be used.

By means of the invention I am enabled to anchor a knife having a long tang firmly inside a handle which is closed on all sides. As compared with the well-known handles consisting of two riveted-on wooden plates or milled handles, the closed handle possesses the advantage that it always retains its shape and its appearance. The shrinking which often occurs in wooden handles cannot have a disturbing effect with respect to the tang. Whereas, in the case of table knives and other small knives the inserting of the blade into the closed handle by means of a pin-shaped pointed tang suffices, this type of fastening would not be adequate in the case of knives having a long blade, which principally are those intended to be benefited by the present invention, since the forces occurring in cutting would bring about a loosening of the handle in sequence of the long lever arm.

The production of the narrow longitudinal slits, corresponding to about the width of the tang, is made possible by the central bore **5** which being made centrally of the handle and may have a diameter of perhaps six millimeters, admits of the introduction of scraping cutter **3** or a similar tool.

By the arrangement of the ribs **7** provided on the tang **6** and which fit snugly yet slidably in the central part of the bore **5**, the firm setting of the tang is assured, and at the same time the tang lies throughout its great length in snug contact with walls of the slot in the handle. Furthermore the inserting of the tang in the handle is greatly simplified since the knife tang follows the prepared bore in the handle without any interference. Therefore no fine operations are necessary.

In practicing the method, the central round bore **5** is first made by an auger or similar tool longitudinally through the central part of the handle **1**. This round bore opens out on both ends of the handle **1**. The bore **5** will be made of a diameter to snugly and slidably receive the mandrel **3** of the cutting tool. This mandrel is inserted in one end of the bore **5** and it is drawn through the handle by any suitable means, for instance by a cord or wire attached to the head **10**. If desired a rigid connection may be made at the point **10**, which rigid connection passes all the way through the bore **5** and projects for operation upon the outside of the handle **1** a
end opposite to that at which the mandrel 3
serted. The mandrel **3** is then reciprocate
and forth at the same time progressively p
the mandrel through the bore **5**. In this m
the smallest cutter **4** will first encounter th
of the bore **5** at diametrically opposite si
said bore and cause the chipping off of the
Such cutter is then followed by a cutter of
ly larger diameter or radius, by reason of
the slits started by the first smallest cutt
enlarged. By means of a number of pr
sively larger cutters **4**, the slits **2** at opposit
of the bore **5** may be extended out to any c
radial distance from the center of the ci
bore **5**.

Referring more particularly to Figures 5
a knife having a customary flat tang **6**ª is s
which tang can be received in the handle
shown in Figure 5 without being affected
bulged central form of the bore **5**. Opposit
tions of the tang **6**ª are received in the s
opposite sides of the bore **5**, and the tang **6**
ply diametrically spans this central rounde
5. Thus the handle produced according
invention is applicable for use with the or
flat tang **6**ª or with a tang **6** made confor
to the handle and having the rounded rib

The rounded form of the bore **7** enabl
mandrel **3** of similar form to easily fit in
bore **5** and to easily slide along in the same.
rounded configuration lends itself to this
pose much better than a square or straight
bore **5** could possibly do.

It will be appreciated that after the c
round bore **5** is first made in a handle **1**, th
3 may be used, its mandrel **3** guided b
rounded walls of the bore **5**, to form the fla
row slits **2** at opposite sides of the en
rounded bore **5**. Thus the bore **5** and the
are all made by methods that operate fro
or both ends of the handle **1** and which do n
quire the removal of any part of the side
of the handle **1** either for the purpose of
ing the initial bore or slits or for afterwar
troducing the tang of the knife; the tang
knife being also introduced endwise of the
dle **1**. Thus the entire circumambient
and integral wall of the handle **1** has no
disturbed from the original growth struct
the natural wood or other substance out of
it is made. Therefore there will be less ten
of the wood to warp or become distorted.

PAUL JANS

PUBLISHED
MAY 25, 1943.
BY A. P. C.

P. JANSEN
KNIFE HANDLES
Filed June 17, 1939

Serial No.
279,774
2 Sheets-Sheet 1

Fig. 1.

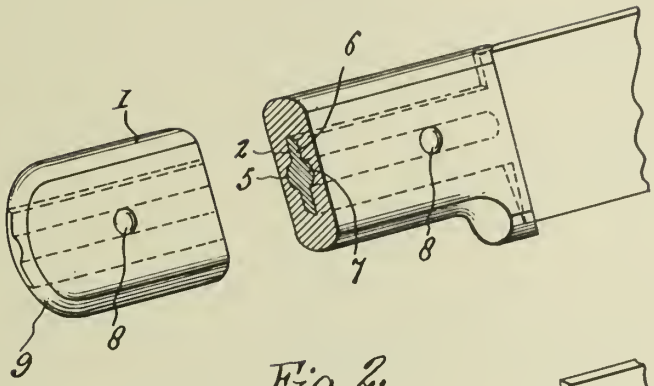

Fig. 2.

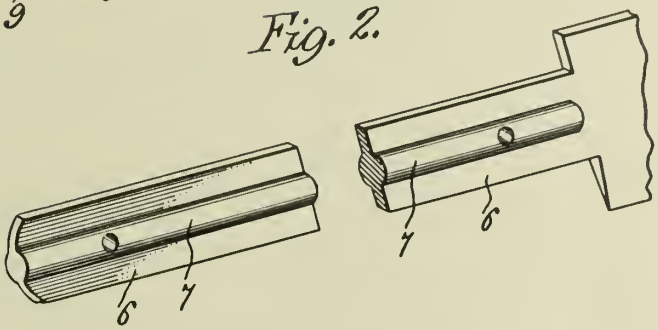

Fig. 3.

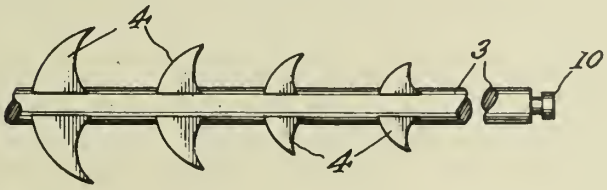

Fig. 4.

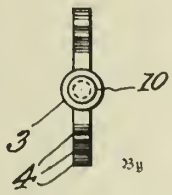

Inventor
Paul Jansen
By
C. P. Goepel
Attorney

PUBLISHED
MAY 25, 1943.
BY A. P. C.

P. JANSEN
KNIFE HANDLES
Filed June 17, 1939

Serial No.
279,774
2 Sheets-Sheet 2

Fig. 5.

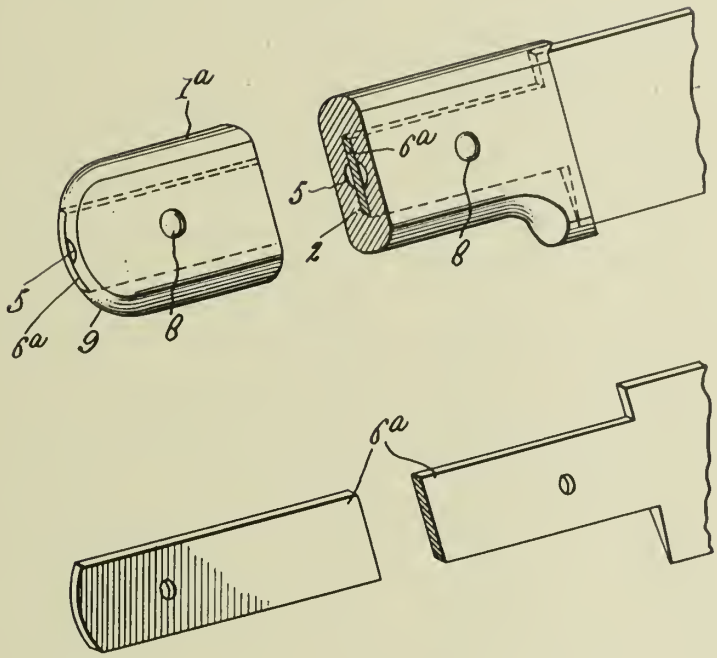

Fig. 6.

Inventor
Paul Jansen
By
C. P. Goepel
Attorney

Published May 25, 1943

Serial No. 281,481

ALIEN PROPERTY CUSTODIAN

INJECTION NOZZLES FOR INTERNAL COMBUSTION ENGINES

Willy Voit, Stuttgart, Germany; vested in the Alien Property Custodian

Application filed June 27, 1939

The present invention relates to injection nozzles for internal combustion engines and of the type wherein the nozzle needle is displaced, from a seating surface, in the direction of injection for opening purposes.

The primary objects of the present invention are to ensure rapid and accurate operation of the nozzle and good atomisation of the fuel.

According to the present invention the needle, beyond its seating surface in the direction of injection, is provided with a cylindrical or substantially cylindrical part, which, during the first part of the opening lift of the needle from its seat on the nozzle body, remains within a complementary part of the nozzle body extending beyond said body seating, so as to substantially or wholly prevent escape of fuel from the nozzle, the dimensions of the cylindrical part of the valve needle in a direction normal to its longitudinal axis of displacement being such that the fuel which is under pressure at the commencement of the opening movement of the needle exerts an additional force on the nozzle seating surface in the opening direction of the needle.

Moreover the needle is constricted between the seating surface and the cylindrical part in such a manner that, when the cylindrical part emerges from the nozzle body end, the outwardly extending peripheral part of the needle constriction, which is adjacent to the cylindrical part, deflects the fuel outwardly in the form of a conical jet.

The invention is more particularly described with reference to the accompanying drawings which show two forms of construction in longitudinal section, by way of example, and in which:—

Figure 1 is a section through one form of nozzle and its holder.

Figure 2 is a large scale section through the injection end of the nozzle of Figure 1 when in the closed position.

Figure 3 is a corresponding section of the nozzle fully open.

Figures 4 and 5 respectively illustrate a modified form of construction, in closed and open positions.

A nozzle holder **1** is secured by a cap nut **2** to a nozzle body **3** having an axial bore **4** which has a wide part at its outer end, and in which a displaceable nozzle needle **5** is provided, the needle **5** at its injection end having a seating surface **6** adapted to limit the displacement of the needle in the closing direction. A closure spring **7** is provided for forcing the seat **6** of the needle **5** lightly against a complementary shoulder **8** of the nozzle body. A sleeve **9a** combined with a spring collar **9** limits the degree of opening of the needle. In the direction of injection the nozzle needle **5** has an extension beyond the seating **6** which extension tapers inwardly in the manner of a truncated cone and then slopes outwards again, the surfaces of the constriction being indicated by the numerals **11** and **12** with the latter presenting a greater component in a direction normal to the axis of the needle than the former. The nozzle body **3**, in the region of the opening thereof, is provided with an annular groove, one inclined bounding surface **8a** of which forms an extension of the nozzle seat **8**, and the oppositely inclined bounding surface of which is indicated by the numeral **13**.

It will be appreciated that the internal periphery of the nozzle body and the external periphery of the nozzle needle, and the limit of opening displacement of the needle are such that when the needle is fully open (Figure 3), the cross section of the fuel path through the nozzle is substantially uniform throughout its length.

The outer end of the extension of the needle is designed as a cylindrical part **14** which, when the needle is in the closed position projects a small distance into the complementary cylindrical part of the bore **4** of the nozzle body **3**.

The operation of the nozzle is as follows:—

As soon as a hydraulic force operating in the opening direction of displacement of the needle exceeds the force applied by the spring **7**, the seat **6** of the nozzle needle is raised from the body seating surface **8**. Since at the commencement of this movement the cylindrical extension **14** of the needle **5** still remains within the bore of the nozzle body **3**, thus preventing, or at least greatly reducing the passage of fuel through the exit orifice of the nozzle, the pressure of the fuel is exerted in the opening direction of the entire nozzle seating surface, so that the total surface affected by the fuel pressure is considerably increased. As a result, immediately after the commencement of the opening lift of the needle from its seat, the displacement of the needle is accelerated in the opening direction whereby it is swiftly and effectively brought into the fully open position.

The needle surfaces **11**, **12**, and the nozzle surfaces **8a**, **13**, serve as guide and rebound surfaces which direct the fuel outwardly through the mouth of the nozzle in the form of a divergent conical jet.

The modified form of construction shown in Figures 4 and 5 differs from the first in that the end **4***a* of the nozzle bore, between the exit orifice of the nozzle body **3** and the seating surface **8** thereof is cylindrical. Moreover the needle is provided with guide and rebound surfaces in the form of a pintle **15**, sloping conically outwards from the cylindrical part **14**, then again sharply inwards. In all open positions of the needle, the fuel impinges on the upper inclined surfa of the pintle and consequently diverges i form of a conical jet. In this form of cons tion care must be taken that the design slope of the surfaces **11** and **12**, and partic the width and slope of the surface **12** is such these surfaces direct the fuel on the surface

WILLY VO

PUBLISHED

MAY 25, 1943.

BY A. P. C.

W. VOIT

INJECTION NOZZLES FOR INTERNAL COMBUSTION ENGINES

Filed June 27, 1939

Serial No.

281,481

2 Sheets-Sheet 1

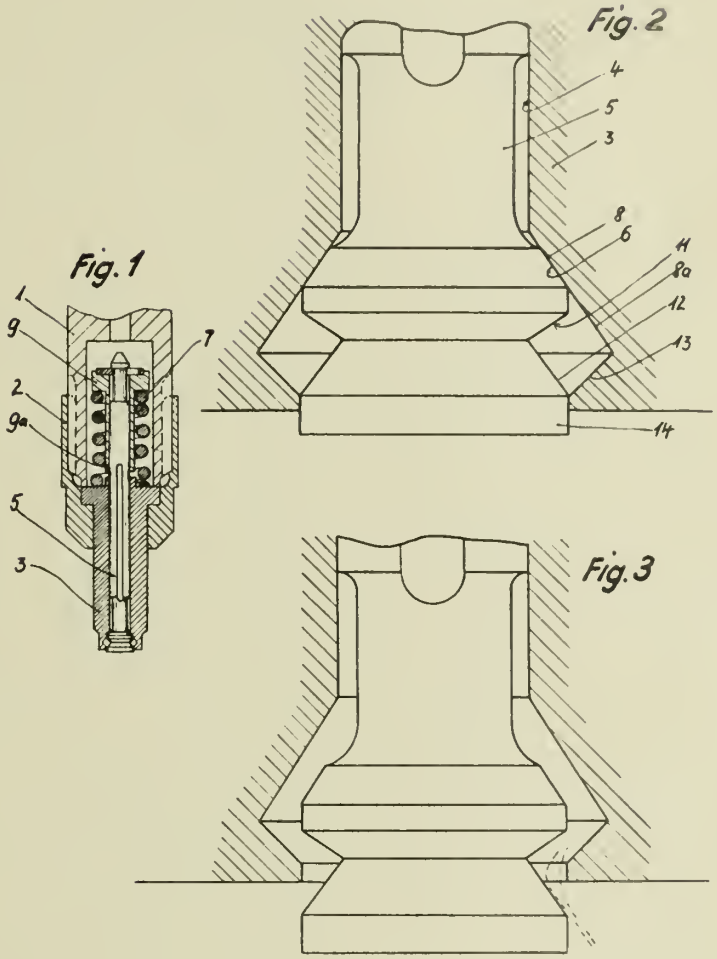

Inventor
Willy Voit
By Roy F. Steward
his Attorney

PUBLISHED

MAY 25, 1943.

BY A. P. C.

W. VOIT
INJECTION NOZZLES FOR INTERNAL
COMBUSTION ENGINES
Filed June 27, 1939

Serial No.
281,481

2 Sheets-Sheet 2

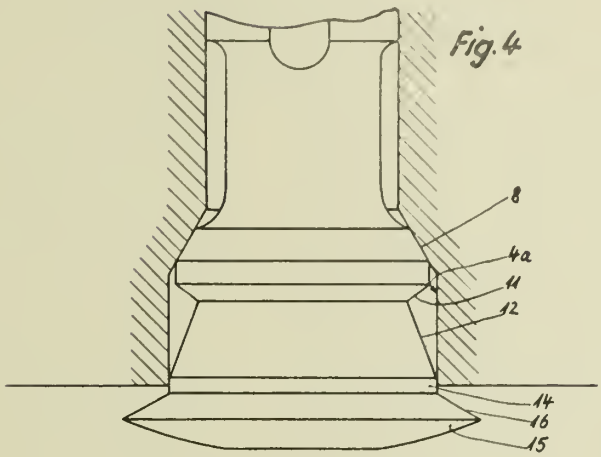

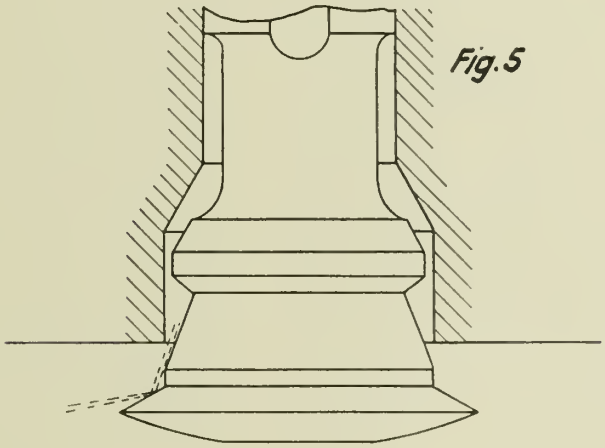

Inventor
Willy Voit
By Roy F. Steward
his attorney

Published May 25, 1943

Serial No. 282,870

ALIEN PROPERTY CUSTODIAN

PERFORATED CARDS IN CONNECTION WITH TABULATING MACHINES

Knut Andreas Knutsen, Paris, France; vested in the Alien Property Custodian

Application filed July 5, 1939

The present invention relates to perforated cards in connection with tabulating machines.

Such control cards are well known in the art. They are divided in vertical columns and horizontal lines, each vertical column being provided with 10 index point positions, representing the numerals from 9 to 0. A numerical value is indicated by a perforation in the corresponding index position.

The invention relates especially to perforated cards in connection with tabulating machines, in which the cards are fed under one or a plurality of contact members, preferably brushes, which, in making contact through the perforations of the card establish electrical circuit impulses. By their timed relation with respect to the cycle of the machine, said impulses control the action of the totalizers, or the action of the printing device. The cards are fed under the brush in the direction of the vertical columns of the card, and the timing of each electrical circuit impulse is determined by the location of the corresponding perforation in a vertical column of the card.

It has been the practice to use circular perforations and cards of a determined size. In order to obtain a greater number of columns without increasing the width of the cards, it is possible to reduce the width of each column, which involves a reduction of the width of the perforations. The number of vertical columns can thus be made as high as 60 and even 80. However such an increase of the number of columns on a card of given width is limited. For a card such as that utilized in connection with a Bull machine, the increase of the number of columns up to 80 gives perforations of a very reduced width and diameter, which involves some difficulties in the handling and the reading of the card.

An object of the present invention is to provide a card of the type described having a greater number of columns than a card of the usual type of equal width and with which the drawbacks above mentioned are entirely avoided.

To this effect, according to my invention, I reduce the height of the perforations and divide the card horizontally into two or more parts each of which has the same characteristics and properties as the existing cards of the usual type, the interval between perforations, measured in the vertical direction, being however smaller than in the existing cards of the usual type.

As a matter of fact there exists cards, intended in particular for statistical machines of the mechanical type, that are divided horizontally into two parts. But the number of perforations that can be made in each vertical column of a given horizontal portion of the card is limited to 5 or 6, and anyway to a number smaller than 10. In these cards, a numerical value is indicated by a combination of two or more index point positions, whereby only four index positions are necessary in a vertical column to represent the numerical values from 0 to 9. The punching of combined perforations is however inconvenient and requires generally a special keyboard. Further the verifying and reading of combined perforations involves more difficulties than the verifying and the reading of single positional perforations, and errors are more frequent. In tabulating machines of the electrical type, the use of cards with combined numerical perforations necessitates a special device for transferring the combined electrical impulses into a single impulse, because the totalizers generally are adapted to be actuated by a single electrical impulse for each value to be introduced on a totalizer element. Another inconvenience with regard to said known cards is that the values indicated on two different horizontal portions cannot be introduced into one same totalizer, but each horizontal portion requires each a totalizer. On the contrary, with the arrangement according to the present invention, the columns of each horizontal portion of the card include at least ten places each capable of receiving a perforation exactly as in the case of an ordinary card for an electrical machine.

The desired reduction of the height of the perforations can be obtained by utilizing a circular perforation of small diameter. However, with electrical machines, circular perforations do not give the same safety of contact as a square perforation. For this reason, the perforations utilized according to the present invention are of square or substantially square shape. It has been earlier proposed to use small rectangular perforations in a card of normal size, but the advantage which these small square perforations could carry along has not been exploited. The centre of these small perforations remained in the same place as the known elongated rectangular perforations. The only effect was to increase the material between two vertical adjacent perforations, without increasing the capacity of the card. Further, it was thought that the speed of the machine had to be reduced in order to assure a sufficiently long contact when a perforation passed the analyzing device. These known perforations were thus without utility with relation to the operation of the machine, and there was practically no valuable reason for using them.

The lower speed of the machine however will increase the space of time between impulses established by adjacent perforations in a vertical column of the card, and thus extend the cycle of the totalizers. I have observed that in consequence it is therefore possible and it is an object of the present invention to reduce the vertical distance between adjacent index point positions in a vertical column of the card when said small square perforations are employed, and modify the connection between the card feeding means and the totalizer operating means, in a corresponding way such that the space of time between consecutive index point impulses may be about the same as for a usual card, with usual performed. The cycle of the totalizers may then be perforated in about the same space of time as usual, but the height of a vertical column comprising ten index point positions will be reduced, the capacity of the card in relation to the card surface will be increased, and more data may be placed on a card which has substantially the usual size, whereby the card is convenient to handle and to read and may be used in the existing tabulating machines with some changes in said machines.

An object of the invention is a card divided in two or more horizontal portions, each of which has ten index positions, in combination with a tabulating machine in which the card feeding means is connected to the totalizer operating means in such a way that the totalizer is performing one cycle for each horizontal portion of the card that passes beneath the analyzing means.

According to the present invention, it is possible to assemble on a single card the data contained on two normal cards without increasing substantially the dimensions of the card and without employment of the plural positional numerical index points.

It is evident that in case such plural positional numerical index points should be desired, the capacity of the card according to the invention would be further increased.

Further objects and advantages of the invention will be seen from the following specification, as well as from the drawings which show a preferred embodiment of the invention:

Fig. 1 shows a usual card with circular perforations.

Fig. 2 shows a card of about half the height of a usual card with small square perforations and a reduced distance between adjacent perforations in a vertical column.

Fig. 3 shows a card of usual size divided in two horizontal portions with small square perforations and a reduced distance between adjacent perforations in a vertical column.

Fig. 4 shows a card of normal size with small square perforations and a reduced distance between adjacent perforations in a vertical column of the card, said perforations representing the different letters of the alphabet.

Fig. 5 shows a card combining the features of a card shown Fig. 3 with a card divided in two horizontal portions.

Fig. 6 shows schematically the card feeling device for a card according to Fig. 4, the card analyzing device, the totalizer and the mechanical and electrical connection between the totalizer and said devices.

Figs. 7 and 8 show details of the totalizer.

The square perforation gives a larger contact surface than the circular perforation of the same width, whereby more wires of the brush may make contact coincidently, and heating and de tion of the wires may be avoided. Also the dling and reading of a card with square pe tions is easier than the handling and read a similar card with circular perforations.

The use of the small square perforation mits to divide a card of substantially n height into two or more horizontal portion of which has the same characteristics and erties as the existing cards of the usual typ at least ten index point positions in a v column of each portion.

When a card of the usual width is divi two horizontal portions each with sixty v columns with ten index point position, an substantially square perforation is emplo indicated on the Figs. 2 and 3, in which the of the square perforation is about the two of the distance between adjacent vertical co and about the two thirds of the distance be centers of adjacent perforation in the sam umn, the contact surface of said square pe tions will be about equal to the contact surf the elongated perforation of the usual eigh umn card not divided in horizontal portio card of substantially normal size, accord Fig. 3 could therefore be fed with approxi the same speed as a card with elongated pe tions and would have the advantage of its g capacity.

It is evident that a certain number of va of cards may be possible, and that for a mined speed of the machine, a determined ant of card would be the most advanta But these variants according to the inv would have the same characteristics of a re total height of ten different indext point tions in a vertical column and a greater n of index point positions on a given surfac card than possible until now.

As shown in Fig. 2 by reducing the hei the perforation made in a card and the di between said perforations, measured in th tical direction, it is possible to obtain a the height of which is reduced to about on of the height of an existing card of the or type.

It is then possible to divide a card of n size into two horizontal portions *a* and *b* of which is similar to the arrangement of thus finally obtaining a card such as sho Fig. 3. With such a card, made of a size to that of an existing card of the ordinary or of a size very little different therefrom, is obtained a number of vertical columns is equal to twice that of an ordinary car another words, the capacity of the ordinar is doubled.

I will now briefly explain, with referen Fig. 6 how the values indicated by the pe tions of a card of the type shown in Fig. transferred to the adding device of a tabu machine of the kind, for instance, of th machine.

The card Fig. 1 is driven in front of the b 2 that examine the columns. For each v column of the card there is a brush. W perforation of the card comes under a bru latter is brought into contact with the rear 3 and closes an electric circuit 4 which ene electromagnet 5. The latter attracts the ture 6 and releases lever 7 which, under t tion of the spring 8 pivots about the spin To the other end of lever 7 is fixed a pin which is mounted a toothed wheel 10 whic

to the movement of lever 7, meshes with a mutilated wheel 11 keyed on shaft 12 which turns continuously in synchronism with the passing of the cards in front of the brushes.

Wheel 10 is always in mesh with the accumulator wheel 14 which is rigidly fixed to the drum 15 that carries the figures on the periphery thereof.

The card feed mechanism is coupled with the totalizer operating shaft 12 in such a manner that when the perforation numbered 9 in one of the horizontal sections of the card passes under the corresponding brush, and the electro-magnet is energized and the lever 7 released, wheel 10 will mesh with the first tooth 16 of the toothed wheel 11 as shown in Fig. 6. Wheel 11 has 9 teeth and therefore causes wheel 10 and consequently the accumulator wheel to turn through an angle corresponding to 9 teeth in the forward direction. If the column that is considered does not contain a perforation 9 but a perforation 8, the contact of the brush with the plate 3 only takes place a little later when the card has been brought into a position such that the perforation numbered 8 is located under the brush.

Assuming that shaft 12 turns in synchronism with the movement of the cards through the machine, wheel 11 has now rotated through an angle corresponding to one tooth in the direction of the arrow, and therefore when wheel 10 meshes with wheel 11 it meshes with the second tooth of said wheel 11 and the accumulator wheel will be rotated eight teeth. If a column of the lower portion of the card is provided with a perforation 1, the electric contact only takes place when wheel 11 has rotated through an angle such that wheel 10 comes into mesh with the last tooth 21 of wheel 11, and the accumulator wheel will be rotated one tooth.

During the time necessary for the card 1 Fig. 5 to move downwards a distance equal to the distance between the perforation 0 and the lower portion *b* of the card, and the perforation 9 of the upper portion *a* of the card (Fig. 3) shaft 12 has completed its revolution, the lever 7 is reset in its initial position and the transfer of the tens is performed.

Cam 17 strikes against the projection 18 of lever 7 and pushes lever 7 counterclockwise until the lower extremity of lever 7 is locked in its initial position by the armature 6 of the electromagnet.

When the card has moved downwards until perforation 9 of the upper portion *a* of the card is located under the brush, wheel 11 is exactly in the condition in which it was when the perforation 9 of the lower portion of the card was located under the brush.

If there is a perforation 9 in the upper portion of the card, the wheel 10 will engage wheel 11 as indicated Fig. 6 and the accumulator wheel 14 will be turned 9 teeth forward.

Cam 20 also turns in synchronism with the movements of the card through the machine and opens circuit 4 when the brush is in front of the space between the perforation numbered 0 of a lower portion and the perforation numbered 9 of an upper portion or when the brush is between two cards.

The card feeding device is connected to the totalizer as follows. One end of the shaft 12 is geared to a motor (not shown) which continuously turns the shaft counterclockwise. Fixed to the shaft 12 is a toothed wheel 23 which by the intermediate wheels 24 and 25 is in geared connection with wheel 26 fixed on a shaft 27. Integral with the wheel 26 is a wheel 28 which by the intermediate wheels 30 and 31 is in geared connection with the wheel 32 fixed to the upper roller shaft 33. Wheel 32 is by the intermediate wheel 34 in geared connection with the wheel 35 fixed to the lower roller shaft 36. Wheel 23 is further by the intermediate wheels 40, 41 and 42 in geared connection with the wheel 43 fixed on the shaft 29. All intermediate wheels may turn on pins fixed to a stationary frame not shown. The shafts 27 and 29 and the roller shafts 33 and 36 are rotably mounted on both ends in bearings fixed to the frame. The diameter of wheel 28 is only the half of the diameter of the wheel 26. The shafts 33 and 36 will thus make only half a revolution for each revolution of the shaft 12. The rollers on the shafts 33 and 36 cooperate with pressure rollers 45, 46 said rollers having suitable diameters, in order to feed one card for each second revolution of the shaft 12. On each extremity of shaft 27 is fixed a cam 50 cooperating with a roller 51 on a lever 52, which lever pivots on a pivot 53 fixed to the frame. The left extremity of lever 52 is provided with a roller 54 which may slide in an horizontal groove 55 on the picker 56. The picker may slide up and down on two slides 57 fixed to the frame. When the shaft 27 turns, the cam 50 will turn the lever 52 counterclockwise about the pivot 53 whereby the picker will move downwards introducing a card between the upper rollers 32, 45. The springs 58 move the picker back in its initial position Fig. 6.

Every time an accumulator wheel 14 passes from the position 9 to the position 0, a projection 70 on said wheel pushes against the upper extremity 71 of a wing lever 72 and pivots said lever about an horizontal pin 73 fixed to the frame. To this effect, said extremity 71 of lever 72 is curbed in a direction perpendicular to the plane of lever 72 and to the plane of wheel 14 (Fig. 8), so that in the initial position of lever 72, the extremity 71 is situated in the path of the projection 70. When pivoting, a projection 74 on said lever causes the wheel 75 to slide along the shaft 19, whereby a single tooth 77 on wheel 75 comes in a position in which it will mesh with the accumulator wheel 14 of the next higher decimal order when the wheel 75 is rotated. The rotation of wheel 75 is effected as follows when a value on the card has been entirely entered on the counterwheel 14. The wheel 75 may slide on the shaft 19 in longitudinal direction, but cannot turn on the shaft. On one end of the shaft 19 is fixed a wheel 80 (Fig. 7) adapted to mesh with a mutilated wheel 81 fixed on shaft 12. When the index point position 0 on the lower portion of the card passes the brush 2, the first tooth 82 of the series of teeth 83 will mesh with the wheel 80. The last tooth 84 will move out of mesh with the wheel 80 when the index position 9 on the upper portion of the card passes the brush. The cam 17 on the shaft 12 will reset the levers 72 and the wheels 75 in their initial positions. There is a lever 72 and a wheel 75 for each accumulator wheel 14. On each wheel 75 the single tooth takes a different position.

The ten transfer operation will thus be effected when the blank space on the card between the horizontal portions moves beneath the brush. With an electric ten transfer device, the operation may be executed in a shorter time than for the device described, and said blank space between the portions on the card may be reduced.

A cam **20** closes the contact **90** when an horizontal portion of a card is beneath the brush, but interrupts the contact when the brush is on the blank space between the horizontal portions on the card or in the interval between two cards.

The battery is indicated by **91** Fig. 6.

The tabulating machine of the type described may comprise a usual printing device operated electrically of the well known type. In this case, a magnet actuating a column of the printing device is shunted in the same circuit that actuated the corresponding counter magnet, as shown by **92** Fig. 6.

The main shaft of the printing device may be the same as the shaft **12** and the printing device will perform one cycle for each horizontal portion of a card that passes the analyzing brush **2**.

The operation of such printing device is described in the Patents No. 1,971,858, 1,971,859 and 2,046,464.

When the distance between vertical adjacent index point positions in a column is the same for a card according to Fig. 2 as for a card according to Fig. 3 both cards may operate the san chine. For this purpose, the picker, is provided with a second projection **94** a to move a card of the size shown Fig. 2 wards between the upper pair of rollers fo downward movement of the picker, wh pile **95** contains such cards of said size. cards would pass the brush consecutiv every second cycle of the totaliser.

Without any transformation, the tab machine may thus be operated by cards mal size with two horizontal portions Fi by cards of smaller size with a single ho portion Fig. 1.

If the machine described is to be opera a certain number of such small cards o half the height of the usual card accor Fig. 1, the movement of the picker could be formed to feed one card for every cycle totalizer by substituting the cams **50** by cams **96** as shown Fig. 6. These doubl would move the picker up and down tw every revolution of the shaft **27**, that is o each revolution of shaft **12**.

KNUT ANDREAS KNUT

PUBLISHED

MAY 25, 1943.

BY A. P. C.

K. A. KNUTSEN
PERFORATED CARDS IN CONNECTION WITH
TABULATING MACHINES
Filed July 5, 1939

Serial No.
282,870

3 Sheets-Sheet 1

Fig. 1

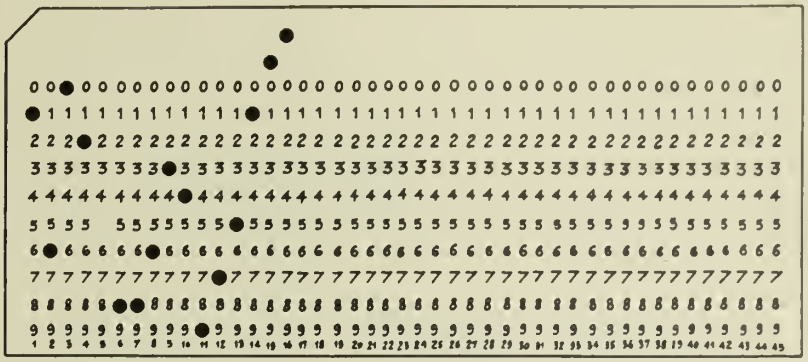

Fig. 2

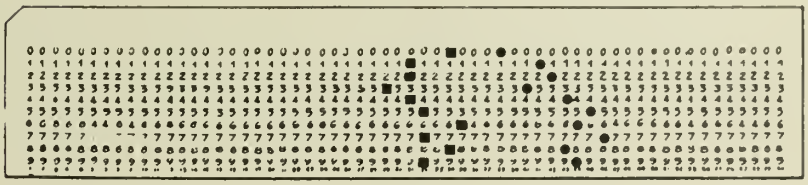

Fig. 3

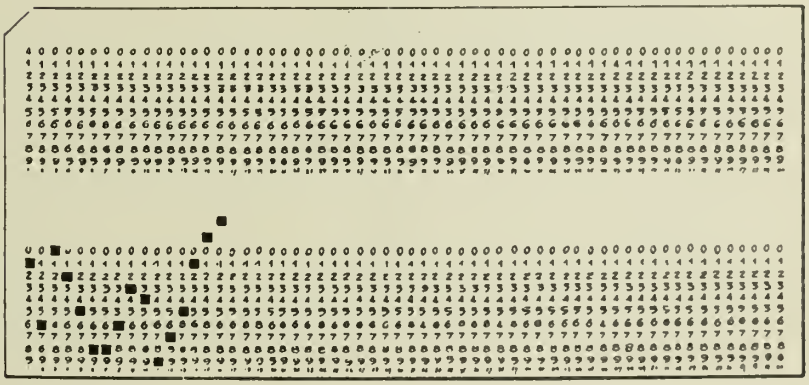

Knut A. Knutsen
By
Watson, Cole, Grindle & Watson

PUBLISHED

MAY 25, 1943.

BY A. P. C.

K. A. KNUTSEN

PERFORATED CARDS IN CONNECTION WITH TABULATING MACHINES

Filed July 5, 1939

Serial No. 282,870

3 Sheets-Sheet 2

Fig. 4

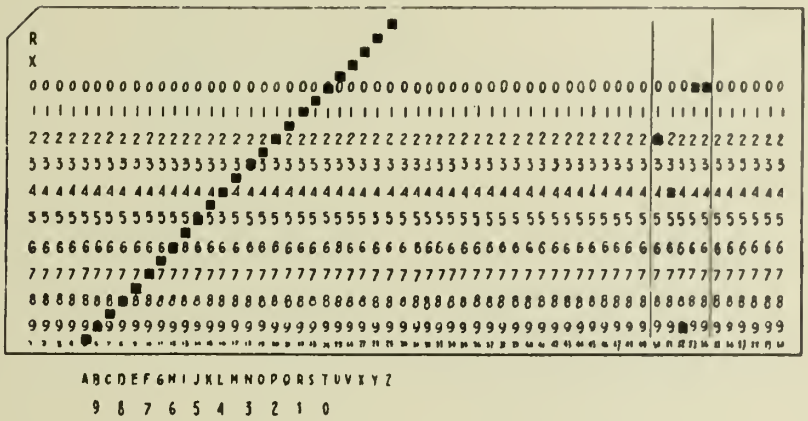

Fig. 5

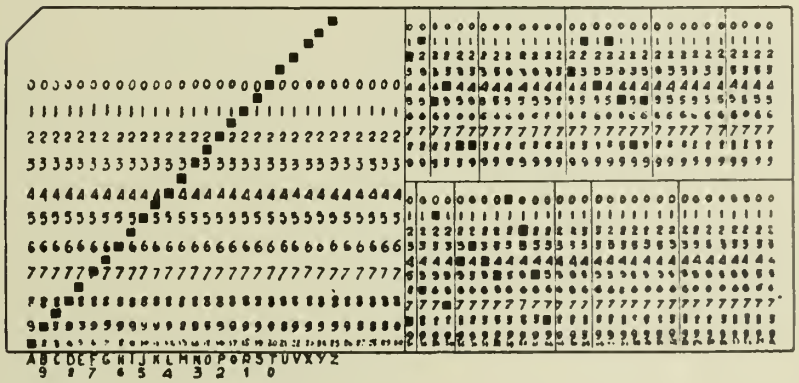

Knut A. Knutsen

By

Watson, Cole, Grindle & Watson

Attys.

PUBLISHED

MAY 25, 1943.

BY A. P. C.

K. A. KNUTSEN
PERFORATED CARDS IN CONNECTION WITH
TABULATING MACHINES
Filed July 5, 1939

Serial No.
282,870

3 Sheets-Sheet 3

Fig. 6

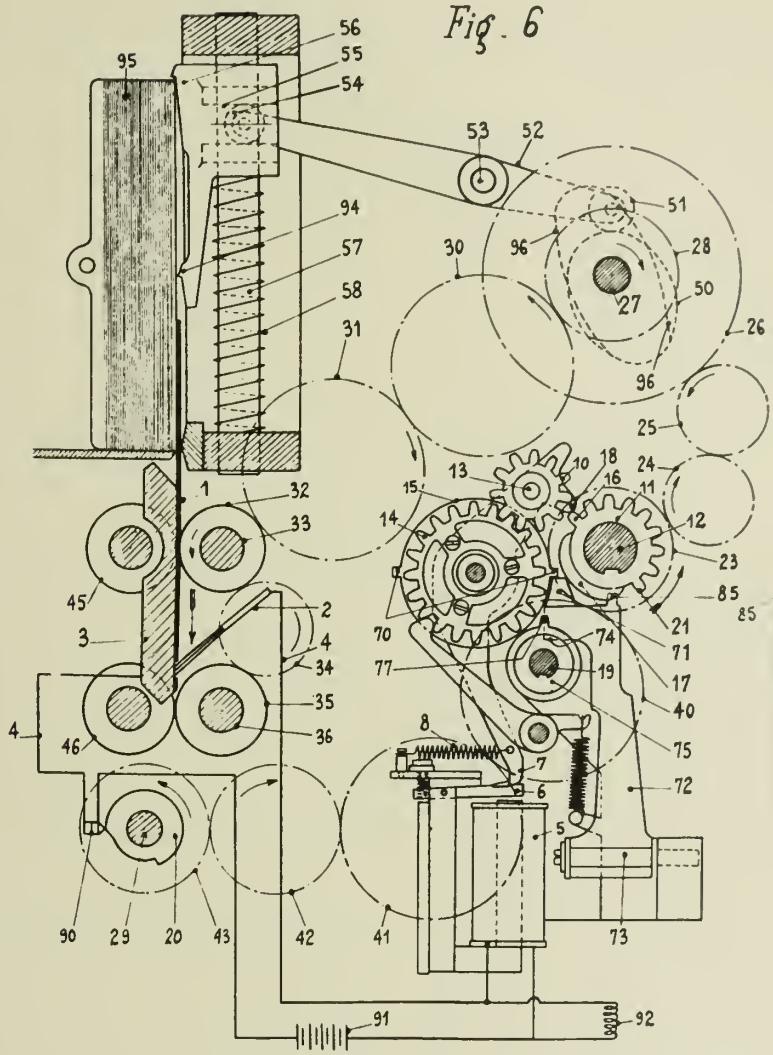

Fig. 8

Fig. 7

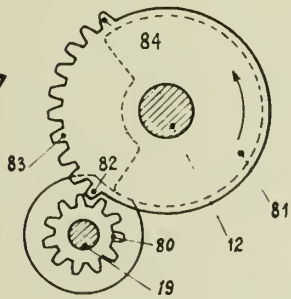

Knut A. Knutsen
By
Watson, Cole, Grindle & Watson
Attys

Published May 25, 1943

Serial No. 283,011

ALIEN PROPERTY CUSTODIAN

VEHICLE BODY

Erwin Komenda, Korntal-Stuttgart, Germany;
vested in the Alien Property Custodian

Application filed July 6, 1939

This invention relates to a vehicle body, and more particularly to such a body formed of artificial material.

An object of this invention is the formation of a vehicle body encompassing all the main body part, which is made as an integral piece of artificial material.

Another object of this invention is the formation of an integral vehicle body of artificial material, encompassing all the main body parts, which can be formed on a simple vertically acting press.

Still another object of this invention is to provide a vehicle body of artificial material, wherein the roof and side walls form an integral bell-shaped structure having cut-out portions for the doors and windows.

A further object of this invention is the provision of a vehicle body of artificial material, wherein the roof and side walls are integrally formed with the cowl and other parts to enclose a motor space, baggage space, etc.

A still further object of this invention lies in the provision of a metallic strengthening frame embedded in a vehicle body of artificial material during the process of forming said body as an integral structure.

An additional object of this invention is the provision of a vehicle body of artificial material formed with integral louvers for the guiding of air to the engine and/or passenger space of the vehicle.

A more comprehensive object of this invention lies in the provision of a vehicle body fulfilling the objects above stated, which is strong, rigid, and at the same time easily, simply and inexpensively manufactured.

Other objects will become apparent from the following description taken in connection with the attached drawings showing several illustrative embodiments of the invention, and wherein:

Fig. 1 is a side elevation, partially in cross-section of an integral vehicle body formed in accordance with the principles of this invention;

Fig. 2 is half a cross-sectional view relative to the central longitudinal plane of the vehicle, taken along the line II—II of Fig. 1;

Fig. 3 is half a cross-sectional view relative to the central longitudinal plane of the vehicle taken along the line III—III of Fig. 1;

Fig. 4 is half a cross-sectional view relative to the central longitudinal plane of the vehicle, taken along the line IV—IV of Fig. 1;

Fig. 5 is half a cross-sectional view relative to the central longitudinal plane of the vehicle taken along the line V—V of Fig. 1;

Fig. 6 is half a cross-sectional view relative to the central longitudinal plane of the vehicle taken along the line VI—VI of Fig. 1;

Fig. 7 is half a cross-sectional view relative to the central longitudinal plane of the vehicle taken along the line VII—VII of Fig. 1;

Fig. 8 is a cross-sectional view taken along the line VIII—VIII of Fig. 1;

Fig. 9 is a cross-sectional view taken along the line IX—IX of Fig. 1;

Fig. 10 is a side elevation of a vehicle body similar to Fig. 1, illustrating the addition of a strengthening frame;

Fig. 11 is a cross-sectional view on an enlarged scale along the line XI—XI of Fig. 10;

Fig. 12 is a side elevation, partially in cross-section along the line XII—XII of Fig. 13, of a modified type of vehicle body formed in accordance with the principles of this invention;

Fig. 13 is half a top plan view of the vehicle body illustrated in Fig. 12;

Fig. 14 is a cross-sectional view along the line XIV—XIV of Fig. 12;

Fig. 15 is a cross-sectional view along the line XV—XV of Fig. 12;

Fig. 16 is a cross-sectional view along the line XVI—XVI of Fig. 12;

Fig. 17 is a cross-sectional view along the line XVII—XVII of Fig. 12;

Fig. 18 is a cross-sectional view along the line XVIII—XVIII of Fig. 12;

Fig. 19 is a cross-sectional view along the line XIX—XIX of Fig. 12;

Fig. 20 is a cross-sectional view along the line XX—XX of Fig. 12;

Fig. 21 is a cross-sectional view along the line XI—XXI of Fig. 19;

Fig. 22 is a cross-sectional view along the line XXII—XXII of Fig. 20;

Fig. 23 is a side elevation, partially in cross-section along the line XXIII—XXIII of Fig. 24 illustrating the details of a modified rear-end construction; and

Fig. 24 is a combined top plan and cross-sectional view taken along the line XXIV—XXIV of Fig. 23.

Fig. 1 clearly illustrates the appearance of a preferred type of integral body made from artificial material in accordance with the principles of this invention, showing the vehicle roof 1 being formed integrally with the windshield frame 2 and cowl 3. In addition to the windshield opening, the roof 1 is also preferably formed

with an integral rear window opening 5. As illustrated in Fig. 1, and also in Figs. 5, 6 and 7, the side walls 13 of the vehicle are also formed as an outwardly downwardly curved integral extension of the vehicle roof 1. In the forward part of the main body portion the side walls are cut through to form a door opening 14. The lower edge 15 of the side walls 13 is preferably extended forwardly below the door opening 14 to form a door sill 16 which, in turn, is integrally connected with the side panel 17 of the cowl 3.

In order to provide a side window opening, the side wall 13 is provided with a cut-out portion 18. It will be here noted, particularly from a study of Fig. 6, which is half a cross-sectional view along the line VI—VI, taken from the central longitudinal plane of the vehicle, M—M, that due to the curved configuration of the side wall 13 the vertical projection of the upper and lower edges of the cut-out portions do not overlap, so that it is possible to cut through the side wall by means of a simple press having vertically acting dies moving in the direction indicated by the arrows R. In a similar manner, the door opening 14 can be cut through by vertically acting dies since the respective lower and upper edges 19 and 20 of the door opening do not overlap in the vertical direction. It will accordingly be seen, therefore, that the entire main portion vehicle body can be made upon a two-part, vertically acting press even though this body is at the same time provided with windshield, window and door openings.

The main vehicle body may be integrally forwardly extended to form a suitable compartment such as the baggage space 21. This can be accomplished, while still retaining the advantages of a two-part, vertically acting press by extending the cowl downwardly and forwardly as a transverse wall 22 to the point 23 which may form a connecting point for the vehicle body with the floor (not shown). This wall may then extend upwardly and forwardly and be provided with an opening 24 in the portion 25 for the purpose of receiving a fuel tank (also not illustrated). From this part the wall will extend all the way to the extreme front of the vehicle 26. The space 21 is preferably closed at its sides by integral longitudinal walls 27, which, at the same time, form inner wheel housing panels. Where the transverse wall is at the level of the lower edge of the side wall 27, this may be directly connected as shown in Fig. 2. Where, however, the side wall extends below the transverse wall, a different mode of interconnection is preferably used. As shown in Fig. 3, in this case the side wall 27 is interconnected with the transverse wall 25 by means of an intermediate wall part intersecting the bottom of the side panel 27 in a substantially V-shaped cross-section. Similarly, in Fig. 4, the transverse wall 22 is connected with the side panel 27 by means of the intermediate member 29. This arrangement still permits the formation of this relatively complicated construction by means of simple two-part vertically acting die. As will be seen in Fig. 4, a similar type of connection is also utilized between the side portion 17 of the cowl 3 at its point of interconnection with the side panel 27. Suitable strengthening means may be provided to rigidly interconnect the double-wall structures above described. As will be seen in Fig. 1, the two parts 22 and 25 of the forwardly extending transverse wall may be strengthened by means of rib 30, while the double wall formed by portions 29 may be interconnected by strengthenin 31. Additionally, the lower edge of the sid tion 17 may be rigidly interconnected wi side panel 27 by the fender 32.

Just as the forward parts of the body ar integral with the main body portion, the re of the vehicle which is preferably intend enclosing the engine, may also be made in As illustrated in Figs. 1, 8 and 9, the sid 13 may extend rearwardly to form the of the rear extension, which may then b grally interconnected by transverse wall

In some cases it is desirable to strength vehicle body by means of inserted metalli forcement members. A preferred arran for doing this is illustrated in Figs. 10 showing, for example, a metallic reinforc sert 35 positioned along the lower edge side wall 13 and extending particularly t the door sill 16 of the cut-out portion 14 reinforcing member 35 is illustrated as provided with extensions 36 for securely a ing it in the artificial material. In a pr arrangement, the reinforcing member 35 i erably rigidly interconnected by welding o suitable means with further reinforcing m such as 37 extending upwardly along the f edge of the cut-out portion, through th members of the windsield frame, along the edge of the cut-out portion and rearwardl the edge of the roof 1 to the extreme end vehicle, and another vertically extending ber 38 for strengthening the rear edge cut-out portion and the forward edge of th dow opening 18. It is contemplated that rigid frames will be provided on each side vehicle and the two frames will then be united as a single framework by suitable transverse reinforcing members (not show

In the formation of the vehicle body, th forcing frame 35, 37 and 38 is preferably place in the lower half of the two-part p means of suitable guiding members such jecting pins 39 and 40, and the body is th tegrally moulded about the frame.

In order to secure a strong rigid bond b the reinforcing members and the surround tificial material, the reinforcing membe have a corrugated shape as is best seen in and may also be formed with openings which the artificial material may flow t connecting columns passing through th forcing frame.

A modified type of vehicle body base up principles of the construction previous scribed, is illustrated in Figs. 12 to 22 in wherein the side walls and other body pa formed double-walled to increase the rigi the structure in many ways, and to impro the interior and exterior appearance of hicle. The roof 101 with its integral win frame 102, cowl 103, and rear window 105, is substantially the same as heretof scribed. Likewise, the side walls 113 a vided with cut-out portions 114 forming t door openings in the vehicle body. In th however, the side walls 113 are forked to pair of depending walls 113′ and 113″, thu ing a double-wall structure. By this a ment, there is not only a gain in streng appearance by the use of these double-wa additionally these walls can be formed wh sired into longitudinal body strengthening and vertical body-strengthening columns.

In the first place, as best seen in Figs. 12, 14 and 15, the side wall 113 is extended into walls 113 and 113', forming a longitudinal supporting beam open at the bottom which extends under the door opening 114 and there forms the door sill 116 consisting of the two longitudinal members 116' and 116''. Fig. 14 illustrates clearly the manner in which the forked side wall construction in the vicinity of the side window 118 extends upwardly to the lower sill 161 of the window 118. Fig. 15, to the contrary, shows that in the rear portion of the vehicle body, the inner portion 113' of the side wall is curved to form an inner panel for the wheel housing 162, whereas the outer portion 113'' of the side wall extends only partially downwardly. At this point the bottom of the wall 113'' may be interconnected with the inner portion 113' by means of the fender 132'. It is to be noted in this connection, that the wheel housing 162 is spaced from the window opening 118 by a distance which is at least equal to the thickness of the double-wall portion 113'. This difference exists in the vertical direction of the body as is best seen in Fig. 13, and makes possible the formation of both of these openings by a press having only vertically acting dies. If the construction of the vehicle body is such that the two openings 118 and 162 overlap in their vertical projections, it will be necessary to form the overlapped portion of one of the openings by means of special dies.

The side walls adjacent the door opening 114 are preferably formed as columns 165 and 166 having a box-shaped cross-section. Figs. 19 and 21 illustrate the manner in which the forward door column 165 connects with the inner walls of the upper cowl 103, and is formed with an opening 167 through which the door hardware (not shown) may be connected in any convenient manner. The rearward door column 166, illustrated in detail in Fig. 20 and 22 is closed on all sides at its lower portion but becomes an open trough-like cross-section at its upper end. If desired, the column 166 may be formed with an integral depression 169 which is suitable for the mounting of a direction indicating device or the like (not shown).

The double sill members 116' and 116'' may be extended forwardly to integrally join the longitudinal panel and interconnecting wall members 127 and 129, while at the rear the side wall portions 113' and 113'' are formed with integral extensions 133' and 133'' respectively, thus forming a pair of longitudinal supporting beams extending from one end of the vehicle to the other. These beams on opposite sides of the vehicle are interconnected by suitable transverse beams. In the front part of the vehicle the connecting transverse walls are formed by the forward wall 126, the intermediate walls 163' and 163'' and the transverse walls 125 and 125'. In the rear the transverse walls 152, 153 and 134' integrally interconnect the inner longitudinal beams on opposite sides of the vehicle, while the transverse wall 134'' interconnects the outer longitudinal beams.

The longitudinal beams described above are preferably stiffened by suitable cross ribs 170, as shown, for example, in Figs. 13, 16 and 17. At the point of intersection of the cross ribs 170 may be formed a core provided with an eye 171 for receiving screws or bolts to attach the body to the chassis (not shown).

Further strengthening is provided as illustrated in Fig. 17 by interconnecting the fender 132 between the lower edge of the cowl side wall 117 with the inner wheel housing panel 127, and the rear by interconnecting the extensions 133'' and 133' by the attached fender 132'.

While not illustrated, it is obvious that suitable metallic reinforcement as described in connection with Figs. 10 and 11 could, without invention, be applied to the vehicle body illustrated in Figs. 12 to 22 inclusive.

Figs. 23 and 24 illustrate the modified type of rear construction adapted to be used in a vehicle body such as illustrated in Figs. 12 to 22 inclusive, but which obviously is not limited to use with such a body alone. It will here again be seen that the vehicle body of artificial material is formed with integral roof 201, windshield frame 202, side walls 213 and rear walls 250. The forward body construction is, however, entirely of no importance with respect to the present invention. In the instant arrangement it is proposed to form louvers between the transverse walls 252 and 253 interconnecting the opposite side walls and the rear wall 250. The transverse walls 252 and 253 direct the cooling air stream to an air cooled driving motor 255 located in the rear engine space 254. The louvers 251 lead into canals 256 which in turn lead into the engine space 254, and are separated from one another by means of wall 257 interconnecting the transverse walls 252 and 253; the latter in turn closes the canals from the vehicle interior. The engine space is preferably closed by suitable means shown here as a lid 258.

It will be obvious that the above-described arrangement of louvers and cooling passages can be simply formed on a press by means of vertically acting upper and lower dies simultaneously with the formation of the remaining body parts.

It will also be obvious that the principles of this louver construction may be applied to a body in which the engine is located in the front under a hood, as well as in the rear as shown in the instant case. The louvers may also be used to provide ventilation of the interior of the vehicle as well as for or instead of cooling the engine.

Many modifications all coming within the scope of the principles of the present invention will be apparent to those skilled in this art. Among those contemplated is the possibility of forming the vehicle body with a roof opening instead of the closed roof illustrated. Such a roof opening can be formed by vertically acting dies simultaneously with the formation of the vehicle body as a whole.

The invention has been described as applicable to a vehicle having an engine mounted in the rear, with the baggage compartment in the front. The invention, however, is clearly applicable to a vehicle in which the engine is adapted to be forwardly mounted.

The type of artificial material used is wholly without importance. It is contemplated that the material may have a phenol, urea, cellulose or polyvinyl basis and may be laminated or unlaminated.

In all cases, with the few slight exceptions previously discussed, the basis of this invention lie in the formation of all the described vehicle body parts upon a simple vertically acting press.

ERWIN KOMENDA.

PUBLISHED

MAY 25, 1943.

BY A. P. C.

E. KOMENDA

VEHICLE BODY

Filed July 6, 1939

Serial No.

283,011

6 Sheets-Sheet 1

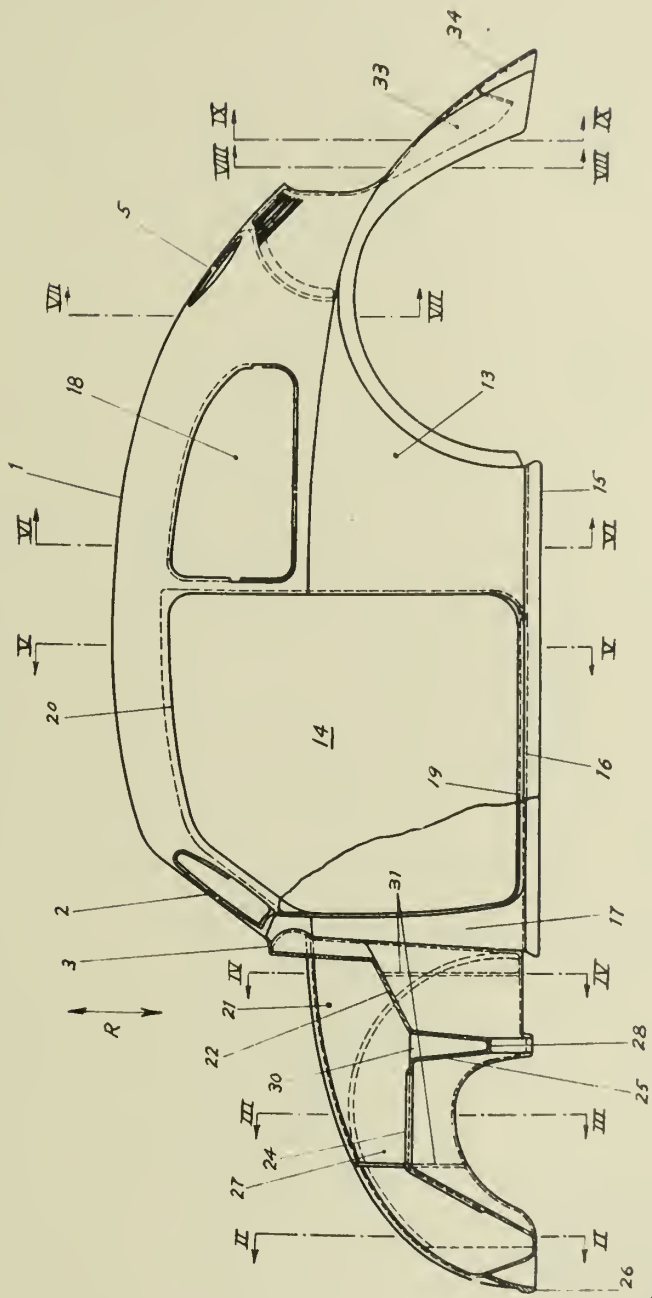

Fig. 1

Inventor:

ERWIN KOMENDA

by A. P. Fleischer

Attorneys

PUBLISHED
MAY 25, 1943.
BY A. P. C.

E. KOMENDA
VEHICLE BODY
Filed July 6, 1939

Serial No.
283,011
6 Sheets-Sheet 2

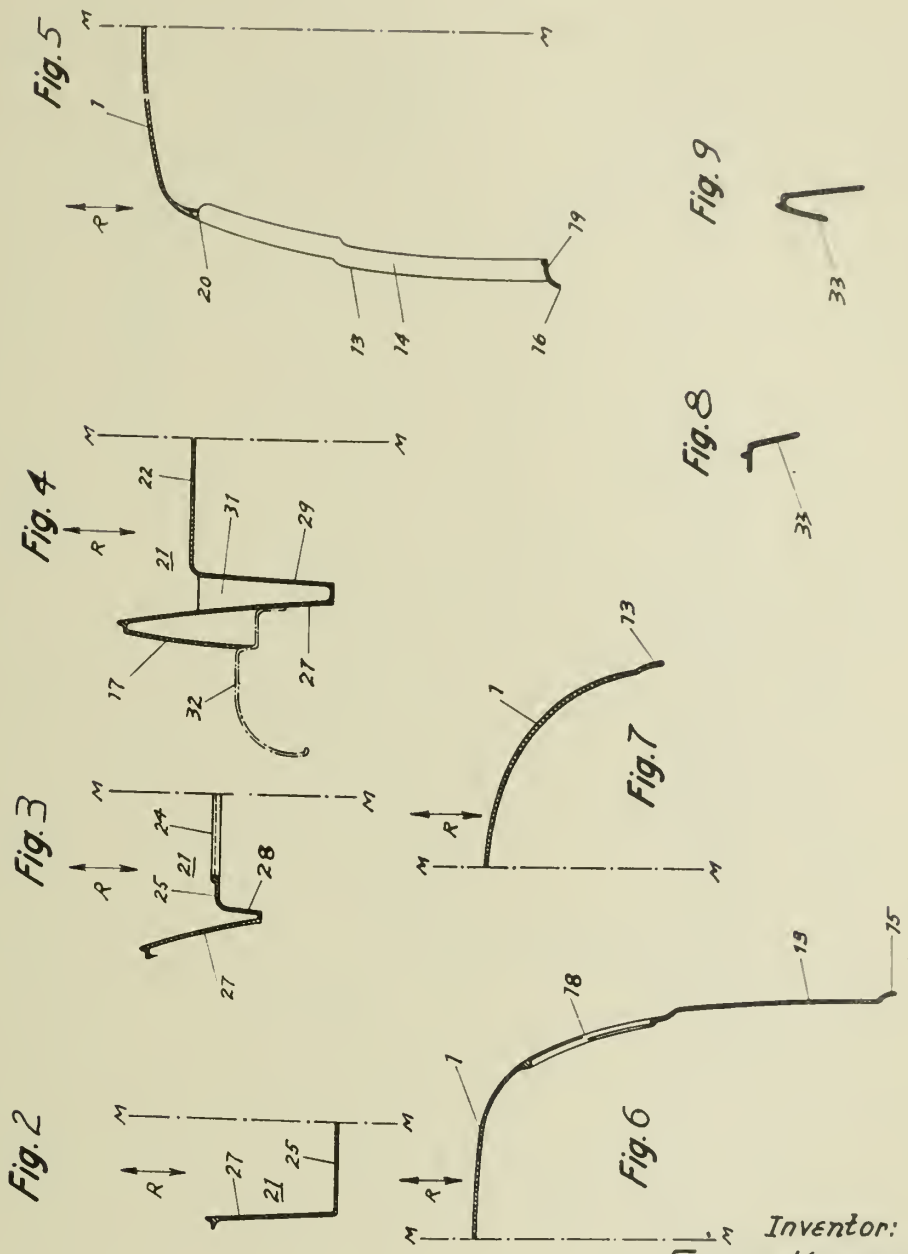

Inventor:
ERWIN KOMENDA
by A. A. Ulrich
Attorneys

PUBLISHED
MAY 25, 1943.
BY A. P. C.

E. KOMENDA
VEHICLE BODY
Filed July 6, 1939

Serial No.
283,011
6 Sheets-Sheet 3

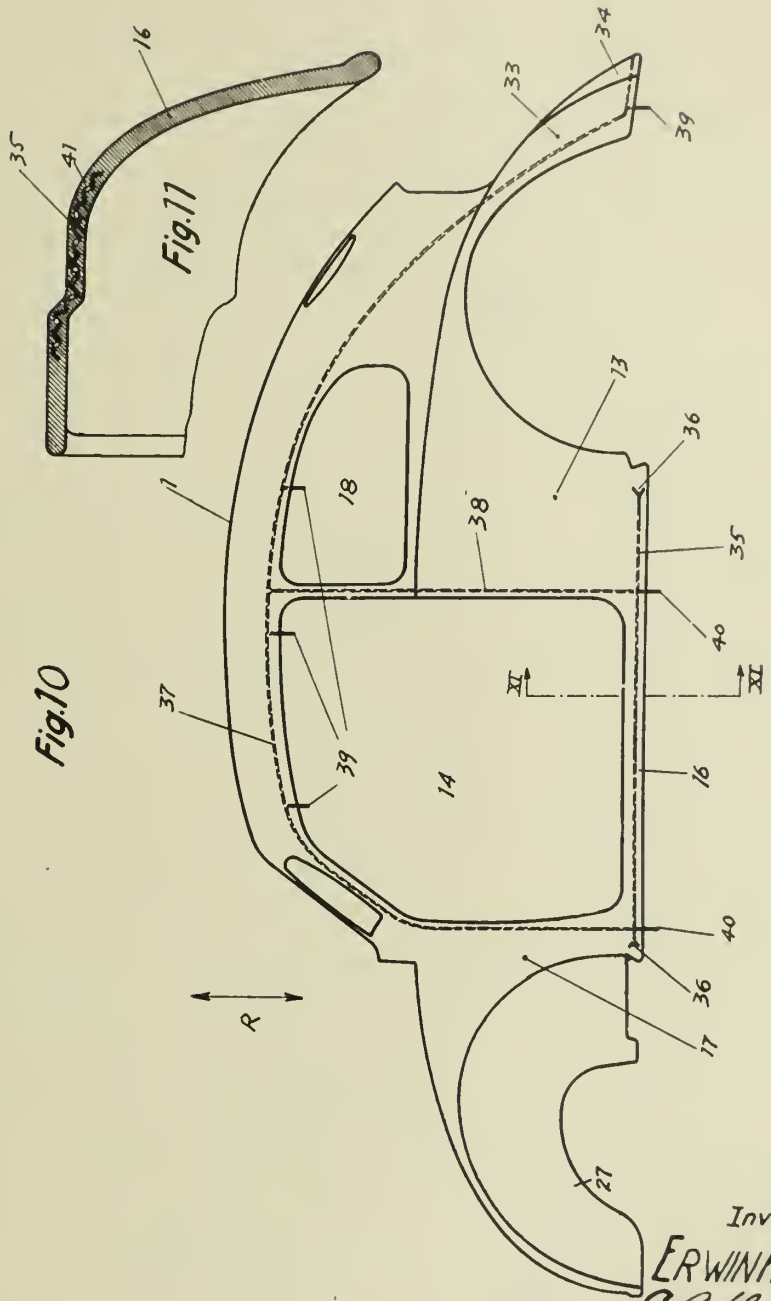

Inventor:
ERWIN KOMENDA
by
A. A. Heishe
Stanwell Rand Jr.
Attorneys

PUBLISHED
MAY 25, 1943.
BY A. P. C.

E. KOMENDA
VEHICLE BODY
Filed July 6, 1939

Serial No.
283,011
6 Sheets-Sheet 4

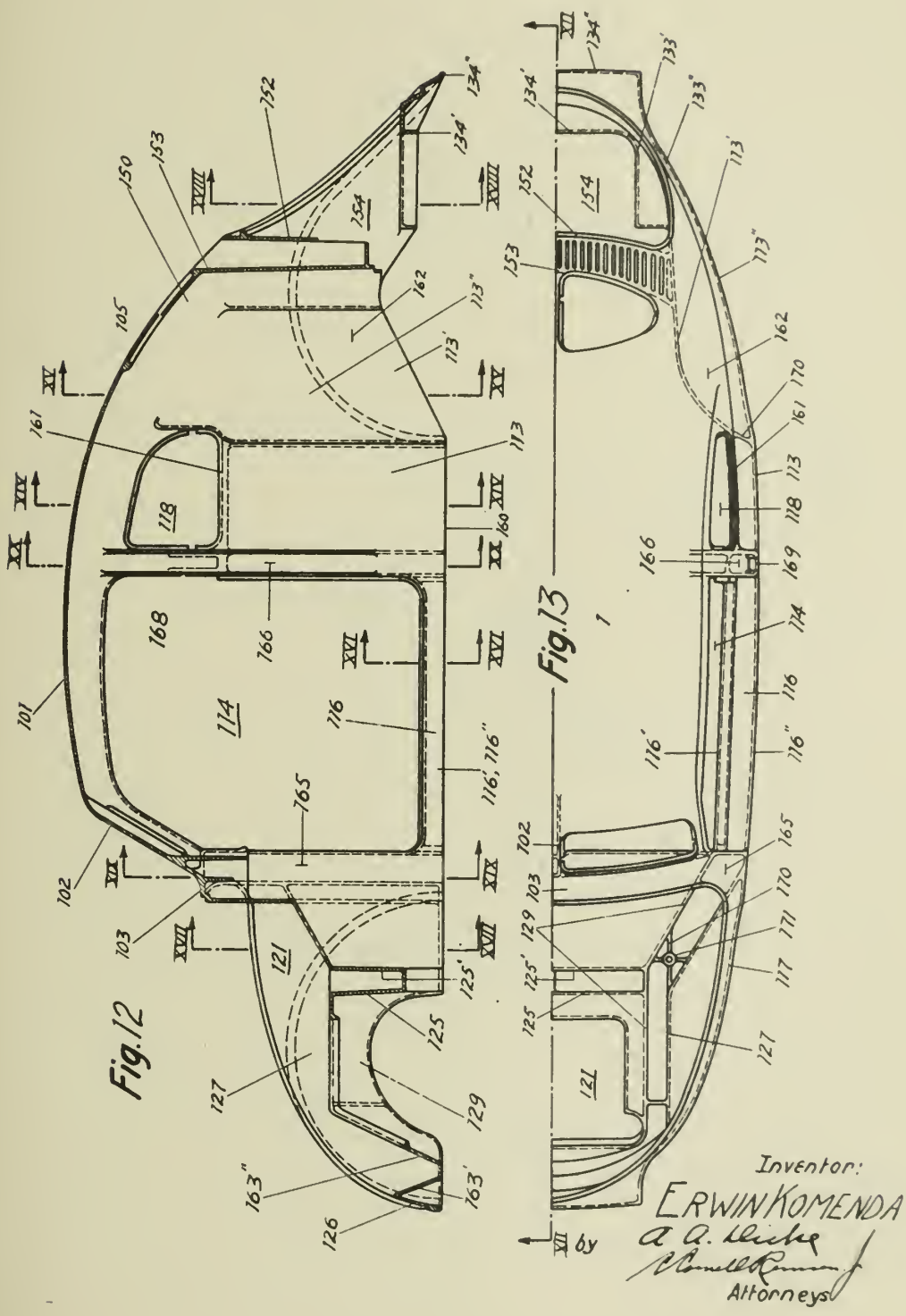

PUBLISHED

MAY 25, 1943.

BY A. P. C.

E. KOMENDA

VEHICLE BODY

Filed July 6, 1939

Serial No.

283,011

6 Sheets-Sheet 5

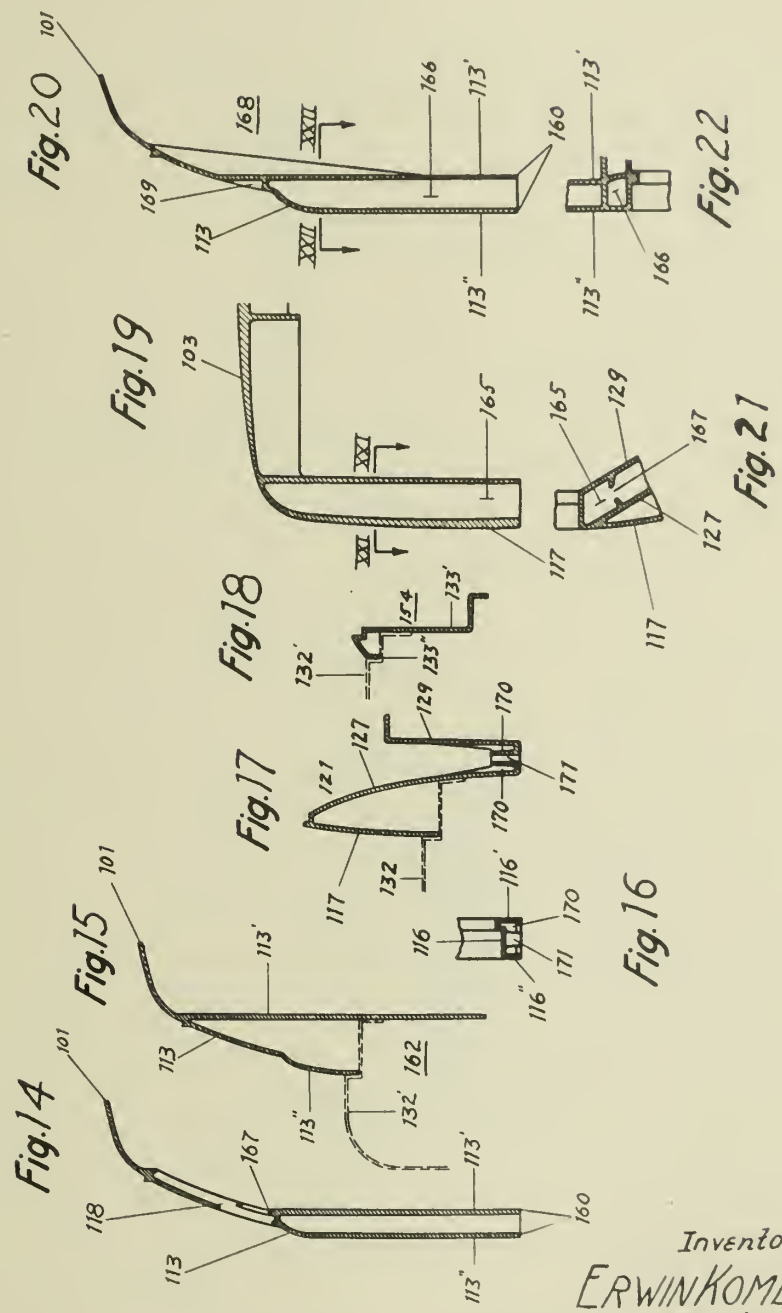

Inventor:

ERWIN KOMENDA

by A. A. Ehrlich

Attorneys

PUBLISHED

MAY 25, 1943.

BY A. P. C.

E. KOMENDA

VEHICLE BODY

Filed July 6, 1939

Serial No.
283,011

6 Sheets-Sheet 6

Fig. 23

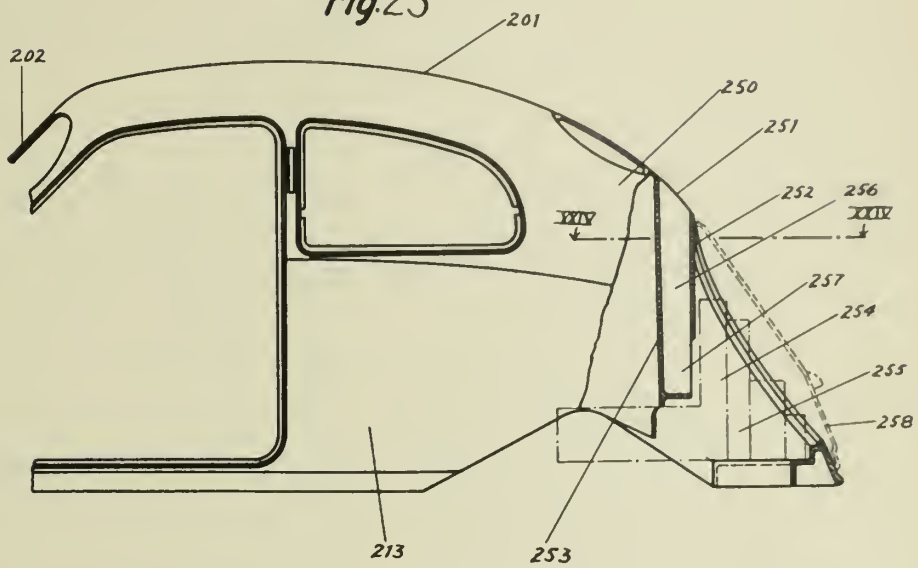

Fig. 24

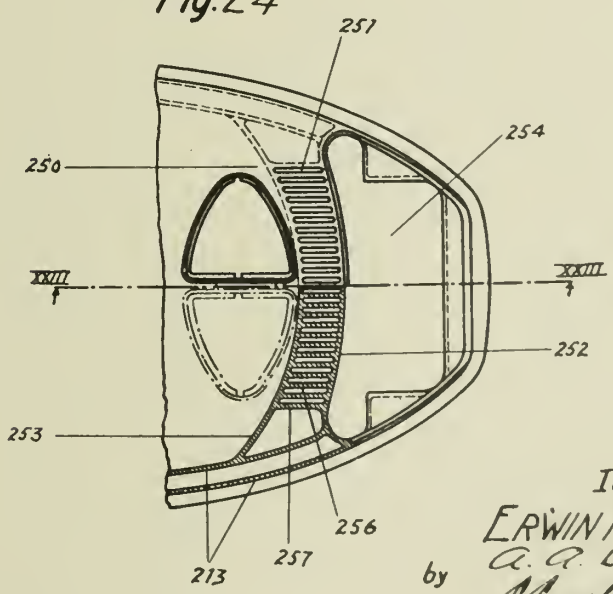

Inventor:
ERWIN KOMENDA
A. A. Leiche
by Monell & Berry
Attorneys

Published May 25, 1943

Serial No. 283,255

ALIEN PROPERTY CUSTODIAN

DRIVING MEANS FOR AIR PUMPING DEVICES ON AIRPLANES

Herbert Wagner, Dessau, Germany; vested in the Alien Property Custodian

Application filed July 7, 1939

This invention relates to driving means for air pumping devices or airplanes, and refers more particularly to driving means for pumping devices by which the suction and discharge of air from the skin layer is effected. By exhausting air from the skin layer greater lifting power can be developed which is particularly desirable for heavily loaded airplanes when starting or landing. Starting is always a critical operation, particularly with a heavy load, and it is therefore of prime importance that a dependable pumping means be provided which can be relied upon to furnish this increase in lifting capacity for use when needed. For reasons of safety it has hitherto been proposed to provide a separate pumping device driven by each motor of multi-motored airplanes, so that each device and motor may handle a part of the suction, but in such cases failure of one of the motors results in throwing the suction system out of balance and produces a very dangerous condition; another arrangement which has been employed consists in the provision of separate pumping devices operated by different motors and all connected to a common main, but then failure of one of the motors materially reduces the volume of air exhausted from the skin layer and thus materially lessens the effectiveness of the entire system.

It is an object of this invention to provide a driving means for an air pumping device on airplanes employed for the above named purpose which guarantees the continued operation of the pumping device at full capacity in the event of failure of one of the motors so that the increased lifting capacity thus generated may be depended upon when it is most needed; and wherein means are provided whereby the pumping device is driven jointly by the motors when they are in operation, and which will continue to function at the same capacity so long as one motor connected thereto is running.

Another object of the invention is to provide a driving means for an air pumping device on airplanes wherein an over-running clutch is provided on each motor shaft through which a drive, preferably through gearing, is imparted to the shaft of the pumping means. Thus I aim to provide a drive means which is automatic and requires no attention or manipulation in the event of failure of one of the motors.

Yet another object of the invention is to provide a driving means for an air pumping device on airplanes wherein the parts connecting the drive shaft of the motor which has stopped will not interfere with the continued operation of the pumping means, neither will the stopped motor be driven thereby.

Having thus stated the major objects and advantages of the invention I will now proceed to describe it in detail with the aid of the drawing, in which a perspective view is shown of my driving means connected to two motors and the pumping device.

In the drawing, 1 designates an air pumping device having a drive shaft 7 on which a driving wheel, in this instance gear 8, is secured. 2 and 3 indicate two suitably spaced motors having conventional propellers 5 and 6 respectively. Provided upon extremities of the motor shafts 15 and 16 are over-running clutches 13 and 14 which are built into driving wheels 11 and 12 respectively, which are shown in the form of gears. Suitable means are provided for transmitting power from the drive wheels 11 and 12 to the gear 8, so that both the motors 2 and 3 drive the shaft 7 in the same direction. In the present instance this is accomplished by the use of one intermediate gear 9 interposed between each of the gears 11 and 12 and the gear 7.

Thus when both the motors 2 and 3 are in operation the pumping device 1 is driven jointly by both of them, but in the event of failure of one of the motors, say the motor 2, the pumping device is still driven by the motor 3 so that when employed for the above named purpose the same amount of additional lifting capacity is still available for the airplane. Upon failure of the motor 2 the gear 11 still continues to rotate but does not cause the rotation of the motor shaft 15 on account of the inclusion of the over-running clutch 13. When the motor 2 is not operating it does not in any way interfere with the operation of the pumping device 1 then being driven by the motor 3 through the clutch 14 and gear 12.

HERBERT WAGNER.

PUBLISHED

MAY 25, 1943.

BY A. P. C.

H. WAGNER

DRIVING MEANS FOR AIR PUMPING DEVICES ON AIRPLANES

Filed July 7, 1939

Serial No. 283,255

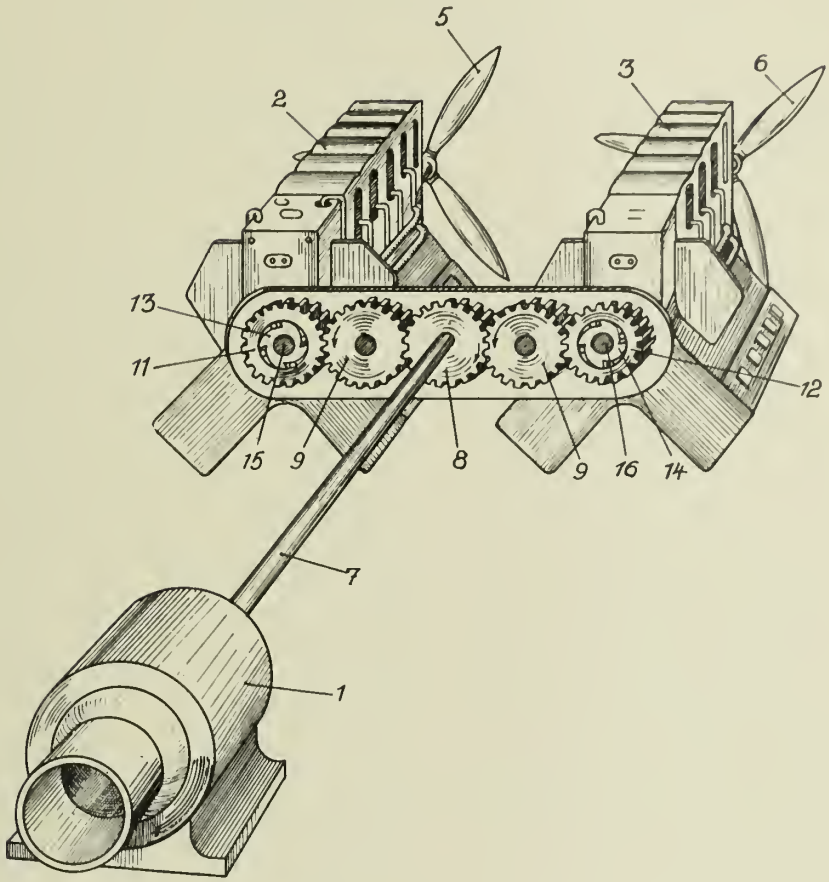

Jnventor:

Herbert Wagner

by Gerald F. Baldwin

Attorney

Published May 25, 1943

Serial No. 283,962

ALIEN PROPERTY CUSTODIAN

AIRCRAFT FUSELAGE

Claude Dornier, Friedrichshafen A. B., Germany;
vested in the Alien Property Custodian

Application filed July 12, 1939

The present invention relates to a new construction of fuselages for aircraft more particularly to fuselages of large air liners whereby the fuselage is subdivided in such a manner that a gangway extends longitudinally through the fuselage.

The fuselage according to the present invention is provided with an interior framework comprising at least two longitudinal beams which are disposed symmetrically with respect to the longitudinal axis of the fuselage. It is not new to provide fuselages with longitudinal beams which are located in the center of the fuselage. It is also known to arrange two longitudinal beams which are disposed close to the side walls of the fuselage. In contradistinction to these known constructions with longitudinal beams, at least two longitudinal beams, are provided in a fuselage according to the present invention which beams are just so far separated that they form a gangway inbetween. With this type of construction the whole support structure is formed by or built in the walls of the gangway and the space on the side of the gangway is completely free from the support structure and unobstructed. Large air liners require a very strong framework in the fuselage. This framework as a rule requires much space and obstructs the interior of the fuselage in an undesired manner. It is an object of the present invention to provide a support framework in the fuselage which is coincident with the separating walls in the fuselage which are required in any case. In a fuselage according to the present invention either the walls which divide the longitudinal gangway from the lateral chambers are at the same time the longitudinal beams of the fuselage framework, or the longitudinal beams which may be for example of the checkerwork type are disposed in the planes of the walls of the gangway and covered on one or both sides in any desired manner so that the framework is not visible and the desired subdivision of the interior of the fuselage is not interfered with. Usually there is only one longitudinal gangway in the center and the longitudinal beam is naturally subdivided into two longitudinal beam members. According to the present invention, however, also more than two longitudinal beam members may be provided forming a plurality of longitudinal gangways. The longitudinal beam members may be interconnected by means of flanges so that a box frame is formed extending from the fore end to the rear end of the fuselage and having a gangway in its interior. The flanges may be used in many ways for improving the static structure of the fuselage. For example, the flanges may form at the same time a part of the skin of the fuselage. In this case lateral fuselage parts are formed in between the upper and lower flange which may simply serve as a closure or may be built in such a manner that they prevent bending of the longitudinal beam or beams to the side. The lower flange may be adapted to form or to support the lowermost deck. In this case a flange is produced of considerable height which forms also the keel framework of the fuselage and considerably contributes to the stiffening of the whole construction. In a case where a plurality of decks are provided above one another these decks may preferably be supported by support structures which are connected to the longitudinal beam members and also serve as intermediary flanges. If the present invention is applied to fuselages of substantially elliptical cross sectional configuration whereby the horizontal axis is smaller than the vertical axis the intermediary flanges or the decks supported thereby may be connected with the side portions of the fuselage and utilized for holding said side portions in the desired position and maintaining the cross sectional configuration of the fuselage. This is of particular importance in airplanes in which there is considerable interior pressure in the fuselage. In fuselages of circular configuration this feature is of less importance; however, also in this case, the side portions of the fuselage skin are preferably connected with the decks if any.

Further and other objects and advantages of the present invention will be apparent from the accompanying specification and claims and shown in the drawings which, by way of illustration, show what I now consider to be preferred embodiments of my invention.

In the drawings:

Figure 1 is a diagrammatic showing of a cross section through a fuselage according to the present invention.

Figure 2 is a diagrammatic showing of a cross section of a modified fuselage according to the present invention.

Figure 3 is a cross sectional view of another modification of the present invention.

Figure 4 is a cross sectional view of a further modification of the present invention.

Figure 5 is a cross sectional view of still another modified fuselage according to the present invention.

Figure 6 is a cross sectional view of an elliptic fuselage according to the present invention.

Figure 7 is a diagrammatic longitudinal sectional view through a fuselage according to the present invention.

Figure 8 is a diagrammatic longitudinal sectional view through a modified fuselage according to the present invention.

Like parts are designated by like numerals in all figures of the drawings.

Referring more particularly to Figure 1 of the drawings two longitudinal beam members **2** and **3** are provided in the interior of a fuselage of circular cross sectional configuration having an outer skin **1**. The beam members **2** and **3** are positioned to form a chamber of the width *b*. The width *b* is the width of a longitudinal gangway and is at least as great as to permit a person to walk between the beams **2** and **3**. This measure *b* may be somewhat larger or smaller without departing from the present invention. It will seldom be greater than the width of a gangway in which two persons can pass one another. The beams **2** and **3** are individually provided with upper flanges **4** and lower flanges **5**.

Figure 2 also shows a fuselage of circular cross sectional configuration. Three longitudinal beams **6**, **7** and **8** are provided in the interior of the fuselage forming two longitudinal gangways each of the width *b*. Also in this case the flanges of the longitudinal beams are independent of one another and the whole fuselage is surrounded by means of exterior skin **9**.

Figure 3 illustrates a circular fuselage having two longitudinal beams **10** and **11**. In contradistinction to the previously described arrangements there is an upper flange **12** and a lower flange **13** common to both longitudinal beams, both flanges forming at the same time a portion of the fuselage skin. A frame or a plurality of frames **16** may be provided to maintain the outer skin of the fuselage in the desired position and to utilize said skin to prevent bending of the longitudinal beam to the side. The frame members **16** are provided with horizontal stays **17** which apparently obstruct the space outside of the gangway. If however the frame members **16** are covered they form walls which subdivide the side chambers into a plurality of rooms.

In Figure 4 a construction is shown in which the longitudinal beam members **18** and **19** are connected by means of a common upper flange **20** which forms the upper wall portion of the fuselage. The common lower frame **21** is of considerable height and width and has an upper part which forms a deck **22** which extends lengthwise through the fuselage.

Figure 5 is a cross section through a fuselage of a large air liner having three decks **23**, **24** and **25**. Two longitudinal interior beam members **26** and **27** are provided. The lower flange wh the same time forms or carries the lower de is constructed in the same way as the lower f in Figure 4. Additional intermediary flang and **29** are provided which contribute to the fening of the interior framework and whic extend outward so as to form the decks **23** a

Figure 6 is a cross section through a fu of elliptic cross sectional configuration. horizontal axis is smaller than the vertica Longitudinal beam members **30** and **31** are vided in the interior of the fuselage and are together by means of a common upper flar and a common lower flange **33**. These fl form also a part of the wall portion of the lage. In addition, an intermediary flange provided which carries the upper deck **35**. upper flange **32** is provided with holes **36** fo and, in a similar way, the lower flange **33** carries the deck **37** with holes **38**. The mediary flange **34** which is situated in the tral zone of the beam and therefore contr very little to increasing the strength of the system is provided with connecting holes **39**. lateral wall portions **40** of the fuselage are nected by means of bolts extending throug holes **36**, **38** and **39**. In case the interior fuselage is exposed to high pressure, the mediary flange **34** together with the deck **3** ried by said flange serves as a tie member be the connecting points **39** and assures m nance of the elliptic cross sectional configur

Figure 7 is a longitudinal section thro fuselage having longitudinal beam memb according to the present invention whic built of sheet material. The longitudinal members of which only one is shown are nected by means of a common upper flar and a common lower flange **43** which carri lower deck **44**. There is also an interm flange **45** which carries the upper deck **4** the web of the longitudinal beam which also as a partition wall between the gangwa the side chambers a plurality of doors **4** arranged.

Figure 8 shows substantially the same struction as Figure 7. However, the longit beams are composed of a framework **48** wh covered on one or both sides so that a s wall is formed.

While I believe the above described em ments of my invention to be preferred em ments, I wish it to be understood that I d desire to be limited to the exact details of and construction shown and described obvious modifications will occur to a p skilled in the art.

CLAUDE DORNI

PUBLISHED

MAY 25, 1943.

BY A. P. C.

C. DORNIER

AIRCRAFT FUSELAGE

Filed July 12, 1939

Serial No.

283,962

2 Sheets-Sheet 1

Fig. 1.

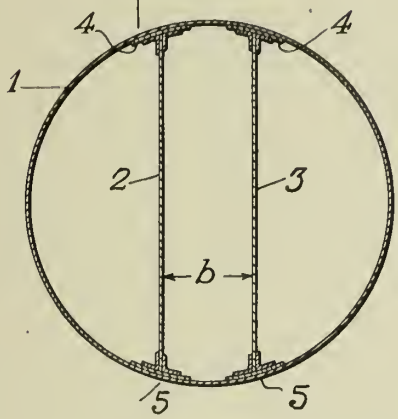

Fig. 2.

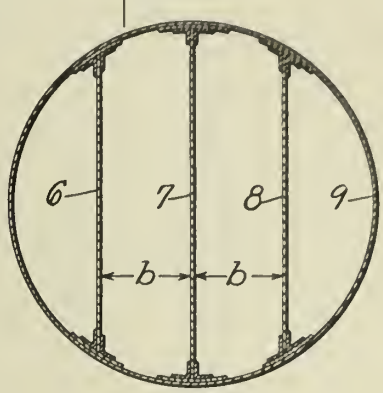

Fig. 3.

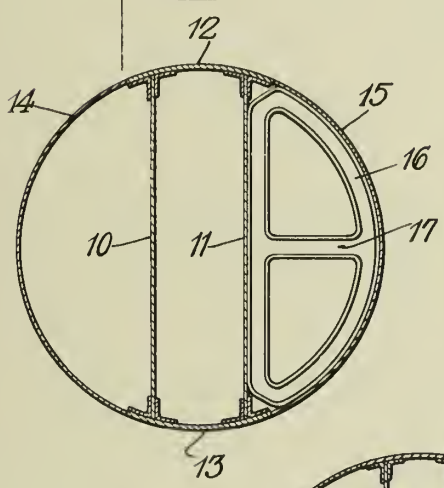

Fig. 4.

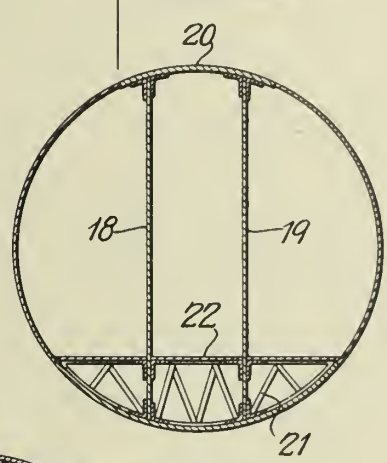

Fig. 5.

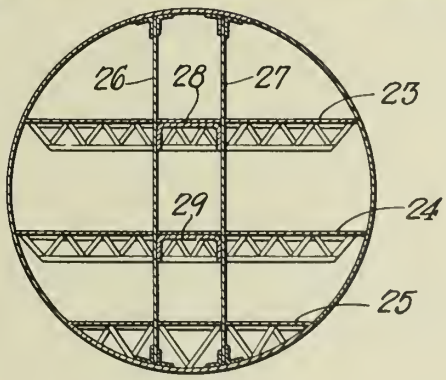

INVENTOR.

CLAUDE DORNIER.

BY Rae A. Mayr.

ATTORNEY.

PUBLISHED
MAY 25, 1943.
BY A. P. C.

C. DORNIER
AIRCRAFT FUSELAGE
Filed July 12, 1939

Serial No.
283,962
2 Sheets-Sheet 2

Fig. 6.

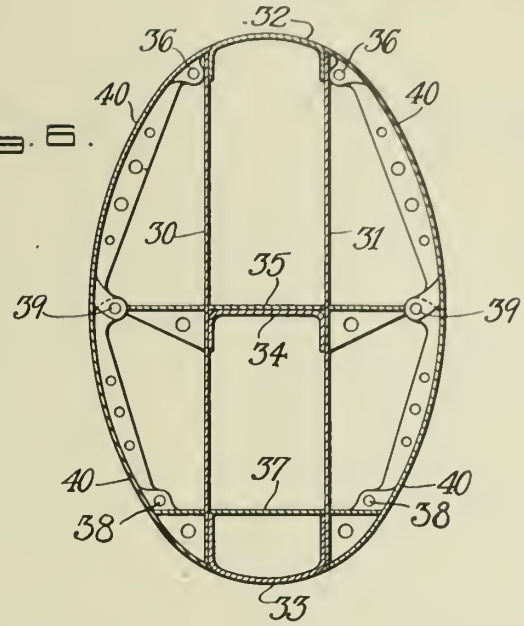

Fig. 7.

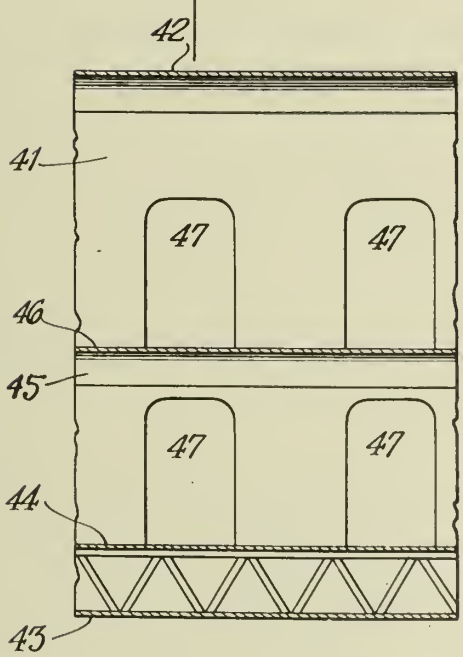

Fig. 8.

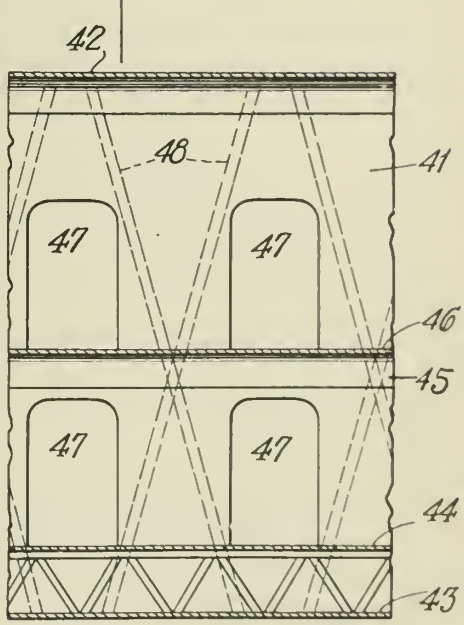

INVENTOR.
CLAUDE DORNIER.
BY Karl A. Mayer
ATTORNEY.

Published May 25, 1943

Serial No. 285,165

ALIEN PROPERTY CUSTODIAN

PICK-UPS AND CIRCUITS THEREFOR

Manlio Marzetti, Milan, Italy; vested in the Alien Property Custodian

Application filed July 18, 1939

This invention relates to pick-ups for talking machines which are provided with a source of light enclosed within them for illuminating the region around the pick-up needle and has for its object a pick-up of the above stated class having means adapted to illuminate said needle in connection with pick-ups in which due to their organisation the light source cannot be located in the pick-up casing at proximity to the needle or, generally, in conditions for direct illumination of the needle.

This invention also discloses an embodiment of the circuit for the supply of electric current to the pick-up light source.

On the annexed drawing:

Figure 1 shows a pick-up having needle illuminating means in accordance with this invention said pick-up being shown partly in section;

Fig. 2 is a diagram showing the connections according to this invention for the cooperation of a pick-up with a radio-receiver set and with power supply means.

In Figure 1, 1 denotes a stand on which a pick up 2 is mounted to rotate around said stand and to oscillate about an axis perpendicular to the same stand, to scan a rotating sound record not shown.

The pick-up transducer intended to convert the needle vibrations into variations of electric voltage is shown at 3 and is provided with a set screw 4 to clamp therein a scanning needle 5 which is intended to be fast in the pick-up transducer 3 to extend therefrom, to engage and scan a sound record.

The light source 6 is located within the casing 2 of the pick-up at a distance from the needle 5 which depends upon the longitudinal extent of the transducer 3; said source consists of an electric lamp or bulb 6 which is suitably supported and inserted in a supply circuit including a current source not shown having one terminal connected with a contact spring 7 by a lead extending through the stand 1 and the arm casing 2, said supply circuit being assumed to close through earth.

The bulb 6 is encircled by a light impervious sleeve 8 having a front mouth 8′ which opens towards the pick-up needle 5; the sleeve 8 and the bulb 6 are held in position in the casing 2 by means of a spring 9 which is fast therein by a set screw 10 and provides a clip 9′ embracing and supporting the base of the bulb 6.

A glass rod 11 extends intermediate the mouth 8′ of the sleeve 8 and the bottom orifice 12 of the pick-up casing 2 through which the needle is intended to extend; said rod 11 has such a transverse or cross section shape and a longitudinal configuration as to surround the pick-up parts, as the transducer 3, which are positioned intermediate the light source 6 and the region to be illuminated thereby.

A transverse end face 11*a* of said rod 11 is located opposite the light source 6 while the other end transverse face 11*b* of said rod is located in front of the needle 5 that is of the region to be illuminated.

It is useful that the face 11*b* of the glass rod 11 opposite the region to be illuminated is ground so as to provide for a more even and uniform diffusion of the light in the region to be illuminated.

By the described arrangement, as an effect of a well known phenomenon occurring in the light propagation through elongated translucent bodies, the light emanating from the light source 6 and falling on the face 11*a* of the rod 11 flows along said rod 11 and issues from its opposite end face 11*b* in conditions proper for illuminating the desired region.

It is thus possible to illuminate the region of the needle 5 in pick-ups wherein the light source must forcibly be located at a material distance with respect to the region to be illuminated and obstructions exist to a direct projection of light from said source to the region to be illuminated.

In the embodiment of a light source of the described class in pick-ups belonging to talking machines combined with radio-receivers, an advantage is found in arranging the circuit feeding the light source and the switch controlling it at the outside of the radioreceiver, to prevent noises and troubles in reproduction.

For such a purpose the circuit feeding the light source is controlled by means of a switch which is distinct with respect to the switch embodied in the radio-receiver and intended to control the circuit of the pick-up transducer. More particularly, the switch of the circuit feeding the electric lamp of the pick-up is combined with advantage with the circuit of the electromotor intended to drive the turn-table carrying the sound record to be scanned, and thus it is obtained that the said lamp is fed only at the time the said motor and turn table are operative.

An arrangement of the above described class is shown in Fig. 2 where the parts illustrated in Fig. 1 are identified by same references. In Fig. 2, 13 denotes a radio-receiver set, 14 is a motor intended to drive a sound record turn-plate 15; 16 and 17 are leads connecting the transducer

3 with the amplifying and sound generating means embodied in the set 13; 18 and 19 are leads feeding the bulb 6 and the motor 14 and supplied as usually by a transformer (not shown) embodied in the set which in turn is fed by supply leads 20, 21 connecting the set with electric current feeding mains, not shown.

As shown a switch 22 is embodied in the lead 16 to control the operation of the transd and a separate switch 23 is inserted in th 19; by the manipulation of the switch 22 th up transducer 3 may be put on or out seps from the control of the pick-up light so and of the turn plate motor 14 which may on or out by the manipulation of the switc

MANLIO MARZE

PUBLISHED

MAY 25, 1943.

BY A. P. C.

M. MARZETTI

PICK-UPS AND CIRCUITS THEREFOR

Filed July 18, 1939

Serial No.

285,165

Fig. 1

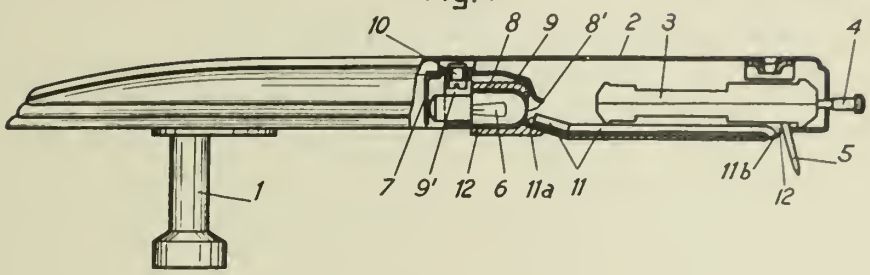

Fig. 2

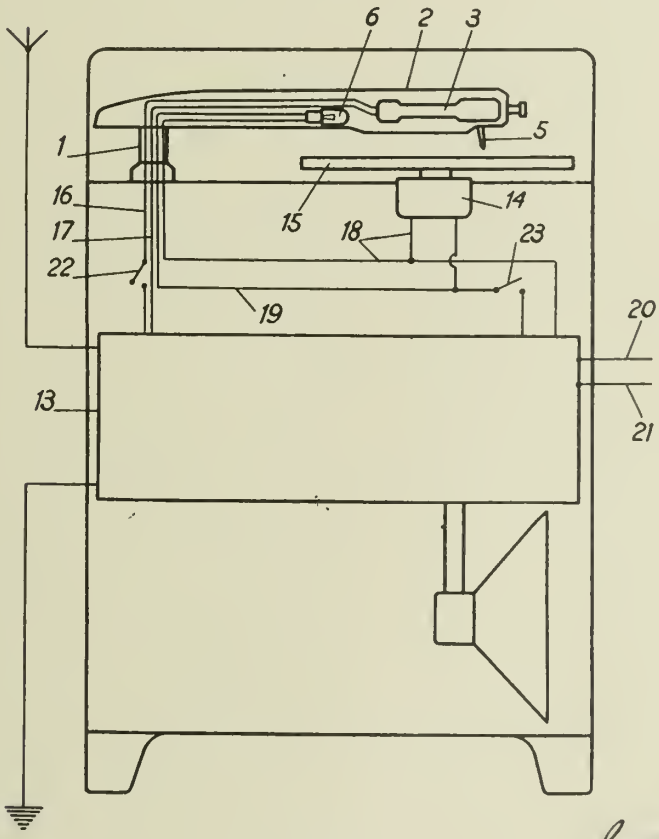

Inventor:
M. Marzetti
By E. F. Wenderoth
Atty

Published May 25, 1943

Serial No. 285,256

ALIEN PROPERTY CUSTODIAN

DEVICE FOR THE SUSPENSION OF VEHICLES

Jean Vancoppenolle, Caen, Calvados, France;
vested in the Alien Property Custodian

Application filed July 19, 1939

The invention relates to the system of suspension for vehicles, in particular for automobile vehicles, according to which, to the usual suspension which comprises a resilient device and a braking device, is added an auxiliary suspension which introduces an additional resilient resistance effect that is greater as the main suspension is farther away from its position of equilibrium.

The invention has for its object a device for such an auxiliary suspension, which is characterized by a multiple leaf spring, the deformations of which are reduced relatively to those of the main suspension.

Under these conditions, the auxiliary suspension may be obtained by means of a single multiple leaf spring or of a single set of multiple leaf springs.

In a number of cases, a spring is used wherein the leaves are arranged equally on either side of the main leaf or a set of such springs is used; the auxiliary suspension acts in this case in the same manner for the deformations of the main suspension in both directions from the position of equilibrium.

In other cases, the leaves are less in number, or even completely eliminated, on one of the sides of the main leaf, so that the auxiliary suspension acts with a force which is variable according to the direction of the deformation of the suspension from its position of equilibrium.

A particularly simple manner of obtaining the reduction of the deformations of the auxiliary suspension consists in attaching same at a point of a lever interposed between the suspended part and the unsuspended part of the vehicle.

Hereinafter, some embodiments of a device according to the invention will be described by way of examples. Reference will be had to the accompanying diagrammatical drawing in which:

Fig. 1 is a side view of a first embodiment;

Fig. 2 is a side view of a modification;

Fig. 3 is a perspective view of another modification of the embodiment according to Fig. 1;

Fig. 4 is a front view of a second embodiment;

Fig. 5 is a similar view but for a modification;

Fig. 6 is a side view of another embodiment;

Fig. 7 is a corresponding plan view;

Fig. 8 is a side view of a modification of the embodiment according to Figs. 6 and 7;

Fig. 9 is a corresponding plan view;

Fig. 10 is a modification of the embodiment shown in Fig. 1;

Fig. 11 is a modification;

Fig. 12 is a diagrammatical front view of another embodiment;

Fig. 13 is a similar view but for a modification;

Fig. 14 is a front view of another embodiment;

Fig. 15 is a perspective view of an embodiment.

Referring to Fig. 1, the auxiliary suspension according to the invention comprises a multiple leaf spring 1, the leaves of which are arranged on both sides of a main leaf 2 which is attached, at one of its ends, to the end 3[a] of a shackle 3. Said shackle is pivoted, by its other end 4, at an intermediate point of a lever 5 interposed between a point 6 of the unsuspended part of the vehicle and a point 7 of the suspended part. The ends of the leaves of the spring 1, which are opposite to the end of the main leaf 2 attached to the shackle 3, are rigidly secured to the suspended part of the vehicle, for example by means of a half-collar 8.

For a vehicle, one or a plurality of leaf springs 1 may be provided, arranged as just described. This auxiliary suspension adds its effects to those of the main suspension of the vehicle, which main suspension is retained.

When there is a deformation of the main suspension, producing a relative movement between the unsuspended part and the suspended part of the vehicle, the ends of the leaves of the spring 1 which are clamped by the half-collar 8 participate in the movement of the suspended part, whereas the end of the main leaf 2 attached to the shackle 3 undergoes substantially the movement of the intermediate point 4 of the lever 5. If the movements are referred to the suspended part of the vehicle considered as a reference system, it will be seen that the deformations of the main suspension are materialized by the movement of the point 6 about the axis of rotation 7 which is in this case fixed, whereas the deformation of the auxiliary suspension is materialized by the movement of the point 4, the amplitude of which is reduced relatively to the movement of the point 6 in the ratio of the distances of the points 4 and 6 from the axis 7.

The small amplitude of the movements of the point of attachment 3[a] of the main leaf 2 enables a spring to be used in which the leaves are arranged on both sides of the main leaf, without untimely breaks occurring.

On the other hand, the auxiliary suspension acts simultaneously whatever be the direction and the amplitude of the deformation of the main suspension.

Fig. 2 shows a modification in the case in which the suspended part 10 of the vehicle is connected to the unsuspended part, which is represented by

the point 6, by means of an arm 11. In this case, said arm advantageously performs the function of the lever 5, thereby reducing to a minimum the number of members to be added to a vehicle in order to equip same according to the invention.

The spring 1 and the lever 5 may be arranged in planes extending in the same direction, as hitherto described, or in planes extending in different directions. Fig. 3 shows a modification in which said planes are transverse. The levers 5 carry shackles 12 between the ends 13 and 13ª of which is attached a main leaf 14. On both sides of said leaf are placed secondary leaves 15, so as to form a so-called "complete" spring. The central part of the spring 16 thus formed is rigidly secured, for example by means of the collar 17, to the suspended part of the vehicle.

In the embodiment according to Fig. 4, the suspended part of the vehicle is provided with a cross-piece 18 to which are pivoted, on both sides of the axis x—x, by means for example of so-called "silentbloc" devices 19 and 20, supporting arms 21 and 22. At the end 23 and 24 of said supporting arms are pivoted arms 25 and 26 which carry at their end shackles 27 and 28 respectively. To the shackles 27 and 28 are attached the ends of a leaf spring 29 forming the resilient device of the main suspension and the central part of which is fixed, by means of the clamps 30 and 31, to the cross-piece 18.

At intermediate points 32 and 33 of the arms 21 and 22 is attached the main leaf 34 of a spring 35 which forms the auxiliary suspension according to the invention and the central part of which is fixed to the suspended part of the vehicle, which is represented by the cross-piece 18, by means of the clamps 30 and 31 and of the spacing block 36.

In the modification according to Fig. 5, the supporting arms, instead of being pivoted on the cross-piece 18, are rigidly secured to said cross-piece, but are formed by flexible blades 37.

In the embodiment according to Figs. 6 and 7, an arm 38 is pivoted at a point 39 secured to the wheel train and is extended by two plates 40 and 41 which leave a space 42 between them. The end of the plates 40 and 41 is mounted, through the intermediary of shackles 43 and 44, on the suspended part of the vehicle. A spring 45 is contained in the space 42; the end of its main leaf 46 is attached to a shackle 47 mounted on the suspended part of the vehicle at 48. The leaves of the spring 45, at the end of the shackle 47, are secured to an intermediate point of the lever 38, for example by forcing in a gusset 49.

The modification according to Figs. 8 and 9 only distinguishes from the previous embodiment by the inversion of the positions of the shackle 47 and of the gusset 49.

A simple means for varying the intensity of the action of the auxiliary suspension according to the magnitude and the direction of the deformation of the main suspension consists, according to the invention, in eliminating a number or even all of the leaves of the spring that are located on a predetermined side of the main leaf.

In Fig. 10 there has, for example, been shown, as a modification of Fig. 1, a method of construction of the auxiliary suspension in which the spring 50 is only provided with leaves the main leaf 51. Under these conditior auxiliary suspension offers a particularl cacious resilient resistance to a deformat the main suspension corresponding to a ward movement of the point 3ª relatively half-collar 8, whereas on the contrary i acts very little for an oppositely directed mation of the main suspension.

In Fig. 11, which shows a modificatio spring 52 is provided with a larger num leaves below the main leaf 53 than abov leaf. Furthermore, the end 3ª of the sha is pivoted on the arm 54 of the shock-ab 55 provided on the vehicle and which thu forms the function of lever 5.

In the embodiment according to Fig. 12, shows a diagrammatical transverse sectio vehicle, the suspended part of same is sented by a shell or cradle 56 connected to t suspended part, including the wheels 57 a by means of torsion bars 59 and 60 which the main suspension. Said torsion bars ar nected to the wheels 57 and 58 by means oting arms 61 and 62. The connection wheels 57 and 58 to the shell 56 is com by levers 63 and 64 which are pivoted a ends, respectively to the suspended part the unsuspended part of the vehicle. Acc to the invention, at least one of the wheel of the vehicle, for example the front wheel is equipped with a leaf spring 65 which i at its central part on the shell 56 by me clamps 66 and the ends 67 and 68 of the leaf 69 of which are mounted, by means o erably adjustable shackles 70 and 71, at mediate points 72 and 73 of the levers 63 a

In the modification according to Fig. arrangement is similar; however, the mai pension is formed by a leaf spring 74.

In the embodiment according to Fig. 14, is similar, the front cross-piece 75 which cured to the chassis forming the suspende of the vehicle is connected to the wheels 77 by means of lower arms 78 and 79 and of arms 80 and 81; helical springs 82 and 8 shock-absorbers, are interposed betwee cross-piece 75 and the lower arms 78 and form the main suspension. The auxiliar pension according to the invention is forn a leaf spring 84 which is fixed at its part on the cross-piece 75 and the ends 86 of the main leaf 87 of which are mo with the interposition of shackles 88 and 89 are preferably adjustable, at intermediate of the arms 80 and 81.

In the embodiment according to Fig. main suspension comprises a transvers spring 90 interposed between the suspende 91 of the vehicle and the wheel 92. A gular member 93 completes the connecti tween the wheel 92 and the suspended p At an intermediate point 94 of the mem is mounted, with the interposition of a s 95, the end of the main leaf 96 of a hal spring 97 which is fixed on the other ha means of the collar 98 in the suspended p the vehicle, said spring 97 forming the au suspension.

JEAN VANCOPPENO

PUBLISHED

MAY 25, 1943

BY A. P. C.

J. VANCOPPENOLLE

DEVICE FOR THE SUSPENSION OF VEHICLES

Filed July 19, 1939

Serial No. 285,256

3 Sheets-Sheet 1

Fig. 1.

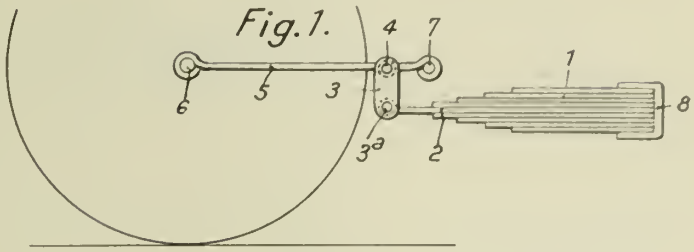

Fig. 2.

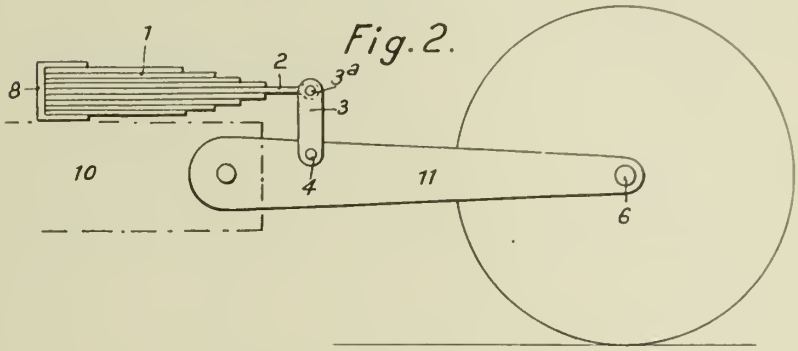

Fig. 3.

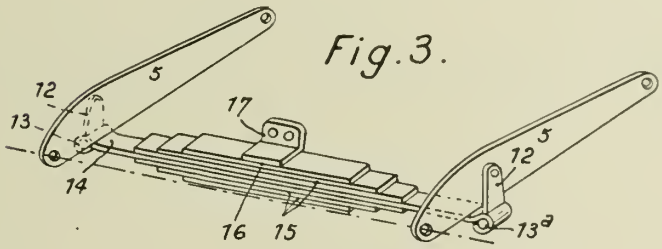

Fig. 4.

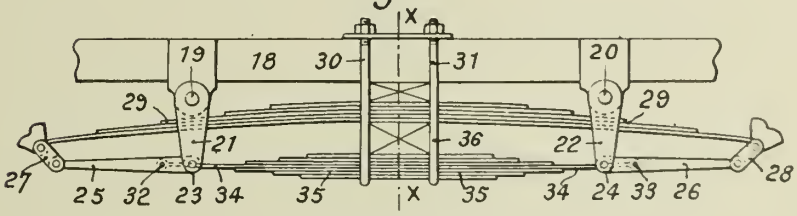

Fig. 5.

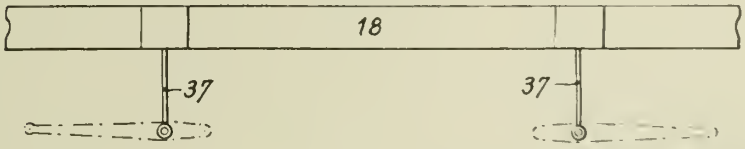

INVENTOR:
JEAN VANCOPPENOLLE
BY Haseltine, Lake & Co.
ATTORNEYS

PUBLISHED

MAY 25, 1943.

BY A. P. C.

J. VANCOPPENOLLE

DEVICE FOR THE SUSPENSION OF VEHICLES

Filed July 19, 1939

Serial No. 285,256

3 Sheets-Sheet 2

Fig. 6.

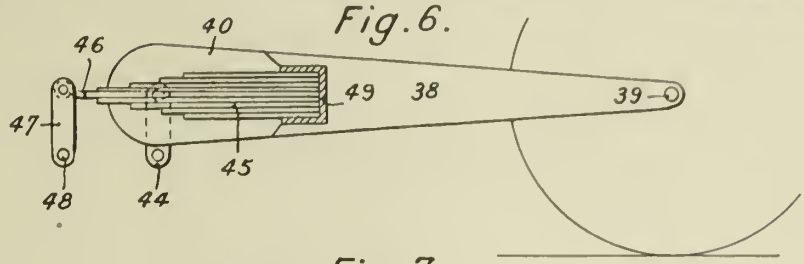

Fig. 7.

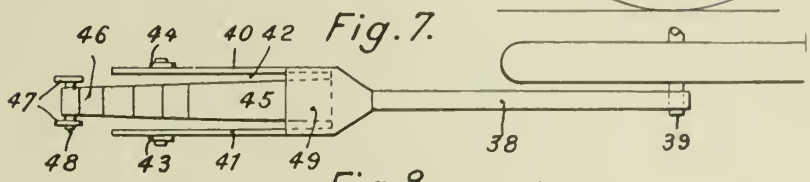

Fig. 8.

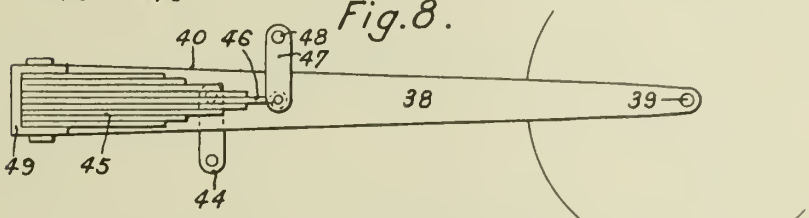

Fig. 9.

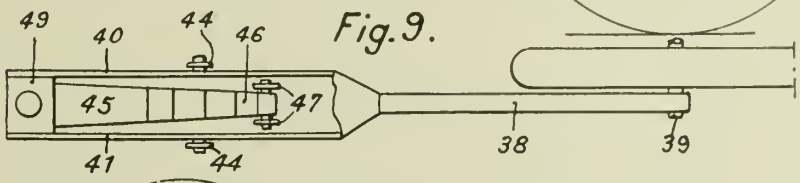

Fig. 10.

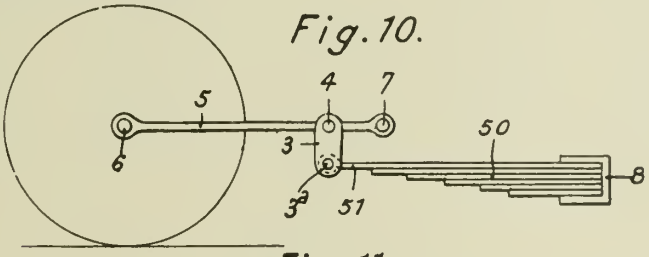

Fig. 11.

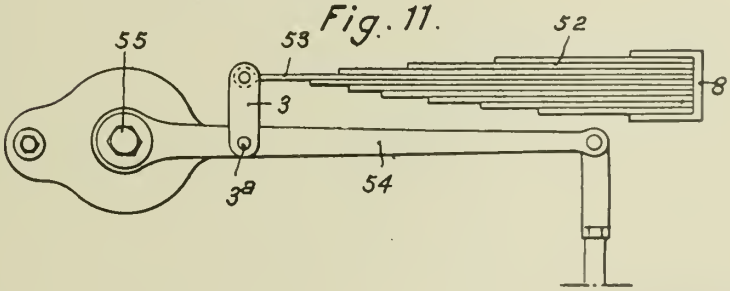

INVENTOR:
JEAN VANCOPPENOLLE
BY Haseltine, Lake & Co.
ATTORNEYS

PUBLISHED

MAY 25, 1943.

BY A. P. C.

J. VANCOPPENOLLE

DEVICE FOR THE SUSPENSION OF VEHICLES

Filed July 19, 1939

Serial No. 285,256

3 Sheets-Sheet 3

Fig. 12.

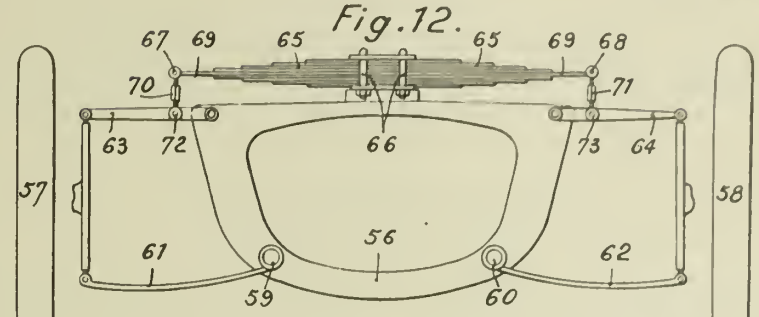

Fig. 13.

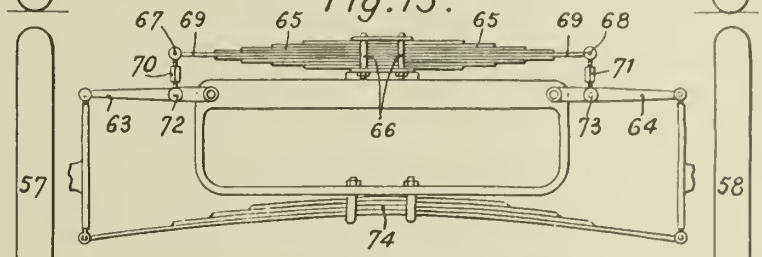

Fig. 14.

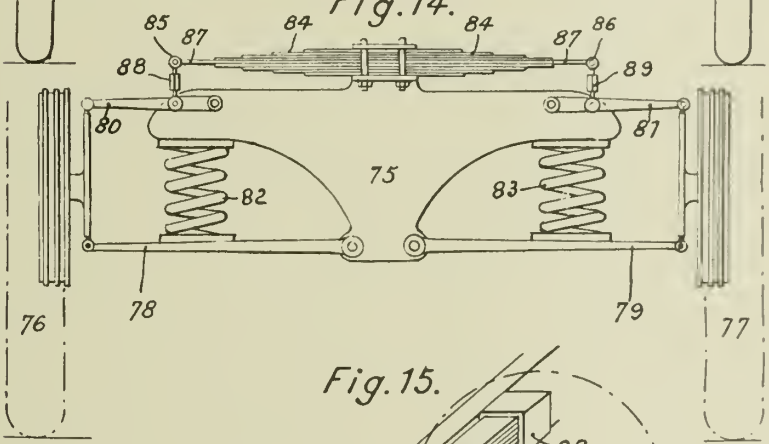

Fig. 15.

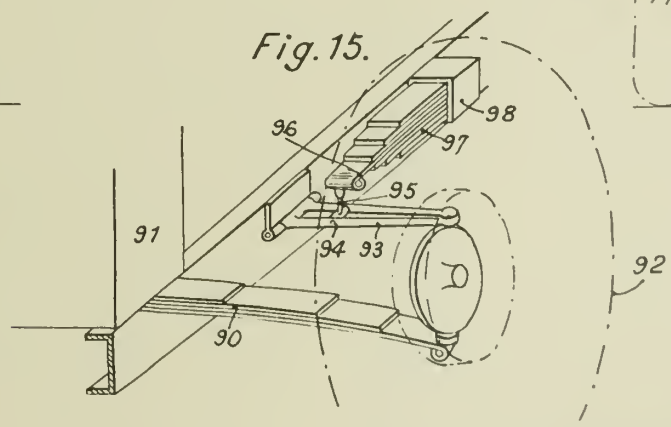

INVENTOR:
JEAN VANCOPPENOLLE
BY Haseltine, Lake & Co.
ATTORNEYS

Published May 25, 1943

Serial No. 285,684

ALIEN PROPERTY CUSTODIAN

PRINTING APPARATUS

Erich Komusin, Frankfurt a. Main, Germany;
vested in the Alien Property Custodian

Application filed July 21, 1939

This invention relates to machines for printing monetary amounts, for example, machines which make an imprint on postal and other packets or the like indicating the postage or the amount of the carriage fee and in which the value of the imprint is adjustable by the user for each packet. Machines of this type are usually provided with a check-reading device from which the total expense incurred by the user can be ascertained. The invention is concerned with a novel and improved construction of the check-reading device of such a machine whereby the amount to be charged to the user is determined in a straightforward and simple manner and whereby fraudulent operation of the mechanism is prevented.

According to the invention the franking machine is provided with a check-reading device comprising an integrating mechanism, which sums up the values of the individual imprints, and a locking device. A record indicating the total value of the imprints made can be obtained from the integrating mechanism after opening the locking device.

The locking device prevents any fraudulent operation of the mechanism on the part of the user, but allows an official who has an appropriate key to open the device at regular intervals of time and make out an account from the recorded readings. Alternatively, the readings can be recorded direct onto an appropriately designed account form from which the amount due may at once be determined and acknowledged by the signature of the user. By fixing a period for the settlement of the account, the risk carried by the authorities is lessened without the necessity for providing special locking devices to prevent further use of the machine after the amount owed by the user has reached a certain total.

In order that the invention may be properly understood and be more readily carried into effect, some examples of a franking machine in accordance therewith will now be described with reference to the accompanying drawings, in which:

Figures 1 and 2 show a franking machine with a check-reading device in different operating positions.

Figure 3 shows an alternative form of construction of a device for locking the check-reading device.

Figures 4, 5 and 6 show a further alternative form of construction of locking device in plan and in front and side elevation.

Figures 7, 8 and 9 show the locking mechanism of a check-reading device in which the stamp is automatically actuated.

Figure 10 shows a check reading device which can be re-set to zero, and

Figure 11 shows an account form.

In the form of construction illustrated in Figures 1 and 2 the franking machine A is provided with an integrating mechanism 6, which sums up the values of the individual imprints made at each operation. A gear wheel 7 is connected to one of the wheels of the integrating mechanism 6, for example with the numeral drum which indicates the marks, and drives a gear wheel 5 which engages with a gear wheel 4 connected to the first numeral drum of a recording mechanism 2. The numeral drums of the recording mechanism 2 are mounted on a spindle 3, and are driven in step with the corresponding drums of the integrating mechanism 6. They carry printing types which are inked by an ink ribbon 8 which runs over guide rolls 9. In front of the mechanism 2 is a pocket 10 into which a card or form 60 may be inserted through an opening 11 in the upper wall of the franking machine A. The side wall B of the franking machine carries a bracket 12, freely mounted in which is a rod 13 having a stamp 14 at one end and a press-button 16 at the other. A spring 15 which is wound round the pin 13 normally holds the stamp 14 out of contact with the type of the recording mechanism 2. When the button 16 is depressed the stamp 14 passes through an appropriate aperture in the pocket 10 and presses the form 60 against the type of the recording mechanism 2. A record is then obtained on the form 60 according to the sum indicated by the integrating mechanism 6.

The opening 11 is normally closed by a shutter 17 (Figure 2). This shutter 17 slides on a rod 18 which is attached to a cross-bar 21. A sliding member 20 is also mounted on the rod 18 and normally holds the shutter 17 in the closed position against the action of a spring 19. This sliding member 20 is normally supported by a bracket 29 on a cover 25 which is attached by hinges to the side wall B. When the cover 25 is closed, an extension 24 lies behind the nose 22 of a resilient locking lever 23 so that the cover cannot be opened. The cover has a perforation 28 in front of the locking lever 23, but this is normally closed by a seal 30 held in a frame 27 on the inside of the cover 25. It is thus impossible to open the cover 25 by pressure on the locking lever 23 without first breaking the seal 30. When the cover 25 is opened, the bracket 29

releases the sliding member 20 and the shutter 17 is forced along the rod 18 by the spring 19. The form 60 may now be inserted through the opening 11 into the pocket 10 and can then be pressed against the type drums of the recording mechanism 2 by actuation of the stamp 14. A record of the setting of the recording mechanism is thus obtained.

In the form of construction illustrated in Figure 3, which corresponds in other respects to that shown in Figures 1 and 2, the cover 25 has an extension 26 which covers the inlet aperture 11 in the closed position of the cover. The type drums of the recording mechanism 2 are inked by a roller 31 instead of by a ribbon.

In the form of construction illustrated in Figures 4 to 6 a lock 41 is mounted in the side wall C of the franking machine A. The lock 41 has an arm 42 which engages with two pins 33 on a hood 32. This hood 32 is freely mounted on the spindle 3 of the recording mechanism 2 and in the normal position (Figure 6) closes the opening 11. The rod 13 which carries the stamp 14 passes through a slot 37 in the hood 32. This slot 37 is however not wide enough to allow the passage of a collar 47 which is mounted on the rod 13; consequently so long as the hood is in the normal position the stamp 14 cannot be operated. When the lock 41 is turned by a suitable key, the arm 42 is pivoted and rotates the hood 32 about the spindle 3 so that it releases the opening 11. At the same time a broadened end 39 of the slot 37 comes opposite the collar 47 wide enough for the latter to pass through; consequently the stamp 14 is free to move when the button 16 is depressed. The button 16 is accessible through an opening in the cover 125. The form is inserted and an imprint obtained as described in connection with Figures 1 and 2.

A second recording mechanism 44 is mounted on the same spindle 3, the type drums of which may be independently adjustable or alternatively connected to those of the printing mechanism 2. The stamp 14 is arranged to press the form against the recording mechanism 44 as well as the mechanism 2 (Figure 4) and the extra type drums are used for recording supplementary particulars.

In the form of construction illustrated in Figures 7 to 9 the movement of the stamp 14 is effected positively upon the movement of the hood 132. The hood 132 is stepped and has a sharp bend 38 (Figure 7). The rod 13 of the stamp 14 passes through a slot 37 in the hood 132. The collar 147 on the rod 13 is conically tapered on the side adjacent to the hood 132. When the key 43 is turned in the lock 41 the arm 42 is pivoted and rotates the hood 132 about the spindle 3 so that it releases the opening 11. At the same time the corner 38 comes into contact with the oblique surface of the collar 147 and displaces the pin 13 to the right against the pressure of the spring 115. A depression 34 in one side wall 135 of the hood 132 is engaged by a projection 36 under the pressure of a spring 35 so that a resistance is offered to further rotation of the hood. This position is further defined with reference to the position of the key 43 (Figure 9) by the numeral 1. The form is now inserted and the key 43 is rotated further. The corner 38 of the hood 132 releases the collar 147 and the stamp 14 strikes the form against the type drums of the recording mechanism under the action of the spring 115. The key rotated back through the same two posit in the first of these the stamp 14 is withd and the form can then be removed, and i final position the opening 11 is re-closed.

In the form of construction illustrated in ure 10 the gear wheel 4 of the printing m nism 2 is connected to a gear wheel 49 v engages with a toothed wheel 50. The whe is connected to milled discs which are acce after the removal of the cover 25. By rot these milled discs after taking a check rea the recording mechanism 2 can be re-set to In this case the figure recorded by the reco mechanism will correspond to the value o imprints made by the franking machine sinc last check reading only.

The form 60, on which the official obtain record from the recording mechanism 2, ca the same time be in the form of a stateme account. Such a form is shown in Figu The spaces 54 and 58 of the form are fill beforehand at the Post Office; they contai number of the franking machine and the c nation of the owner and user of the appa The space 55 is for the record of the reco mechanism 2 and also that of the mechanis if this is used. The latter may be adjust the number of the machine, as shown. The cial enters the sum total printed by the meter 2 in the space 56 together with the The total printed at the previous check re can already have been entered in this spa that the difference can be at once deter from the two entries. The owner of the ratus acknowledges the correctness of the c lated amount by signing his name in the 57 and the official gives a receipt upon pay of the amount due.

When the check meter 2 has a device fo setting to zero (Figure 10) the space 56 have only one line for the entry of the charge, unless it is preferred to read off the from the integrating mechanism 6 which i ible from outside and enter these. A fu check is then obtained since the difference c two totals ought to agree with the amour corded by the recording mechanism 2. O more copying sheets can be bound with th count form and inleaved with carbon p Copies of the entries are thus obtained. Als space 55 on the form can itself be covered w flap of carbon paper, in which case the drums of the recording mechanism 2, and used, do not have to be inked either by an ing ribbon 8 (Figure 1) or by an inking (Figure 3).

Only the official entrusted by the posta thorities with the check reading has the ke operating the lock 41 (Figures 4–9) or the 30 (Figures 1–3). Since the opening 11 fo sertion of the form 60 is normally shut, fra lent tampering with the mechanism cann successful, for should such an attempt be either through breaking the seal 30 or th damaging the lock, it is at once ascertai Since no falsification of the charge is the possible, it is no longer necessary to provid apparatus with special locking devices to pr further use of the machine after the cancell of a certain prepaid amount or after lapse certain length of time.

ERICH KOMUS

PUBLISHED

MAY 25, 1943.

BY A. P. C.

E. KOMUSIN

PRINTING APPARATUS

Filed July 21, 1939

Serial No.

285,684

4 Sheets-Sheet 1

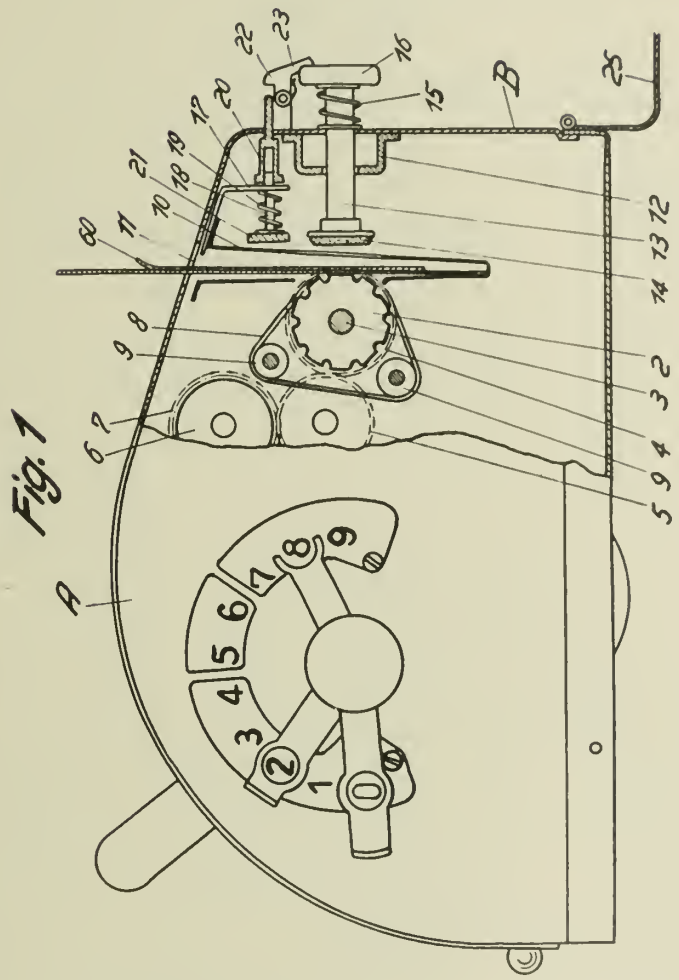

Inventor

Erich Komusin

By Gill & Jennings

Attorneys

PUBLISHED
MAY 25, 1943.
BY A. P. C.

E. KOMUSIN
PRINTING APPARATUS
Filed July 21, 1939

Serial No.
285,684
4 Sheets-Sheet 2

Fig. 3

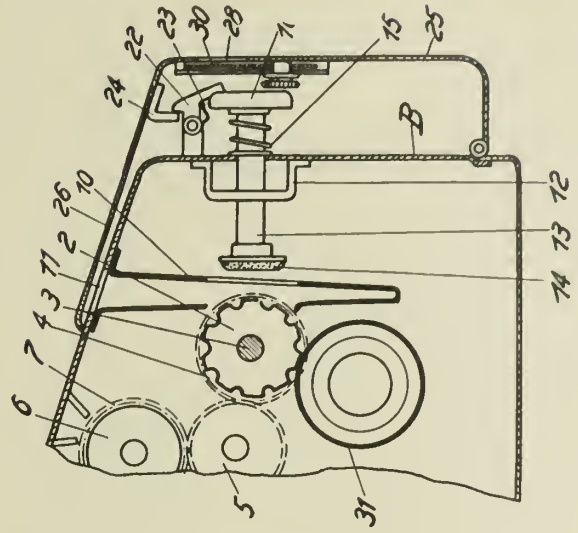

Fig. 2

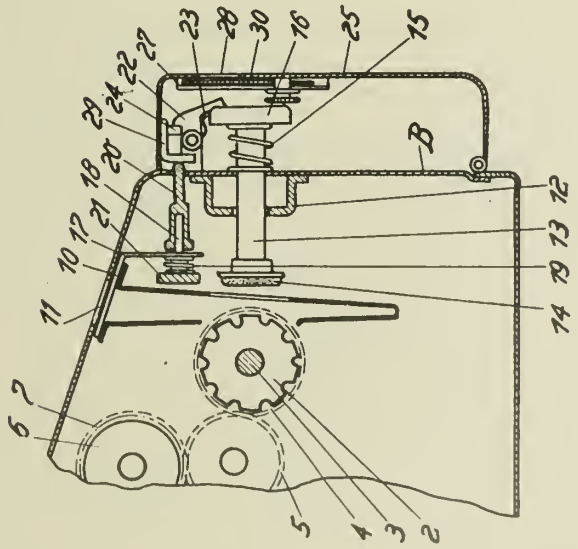

Inventor
Erich Komusin
By Gill Jennings
Attorneys

PUBLISHED
MAY 25, 1943.
BY A. P. C.

E. KOMUSIN
PRINTING APPARATUS
Filed July 21, 1939

Serial No.
285,684
4 Sheets-Sheet 3

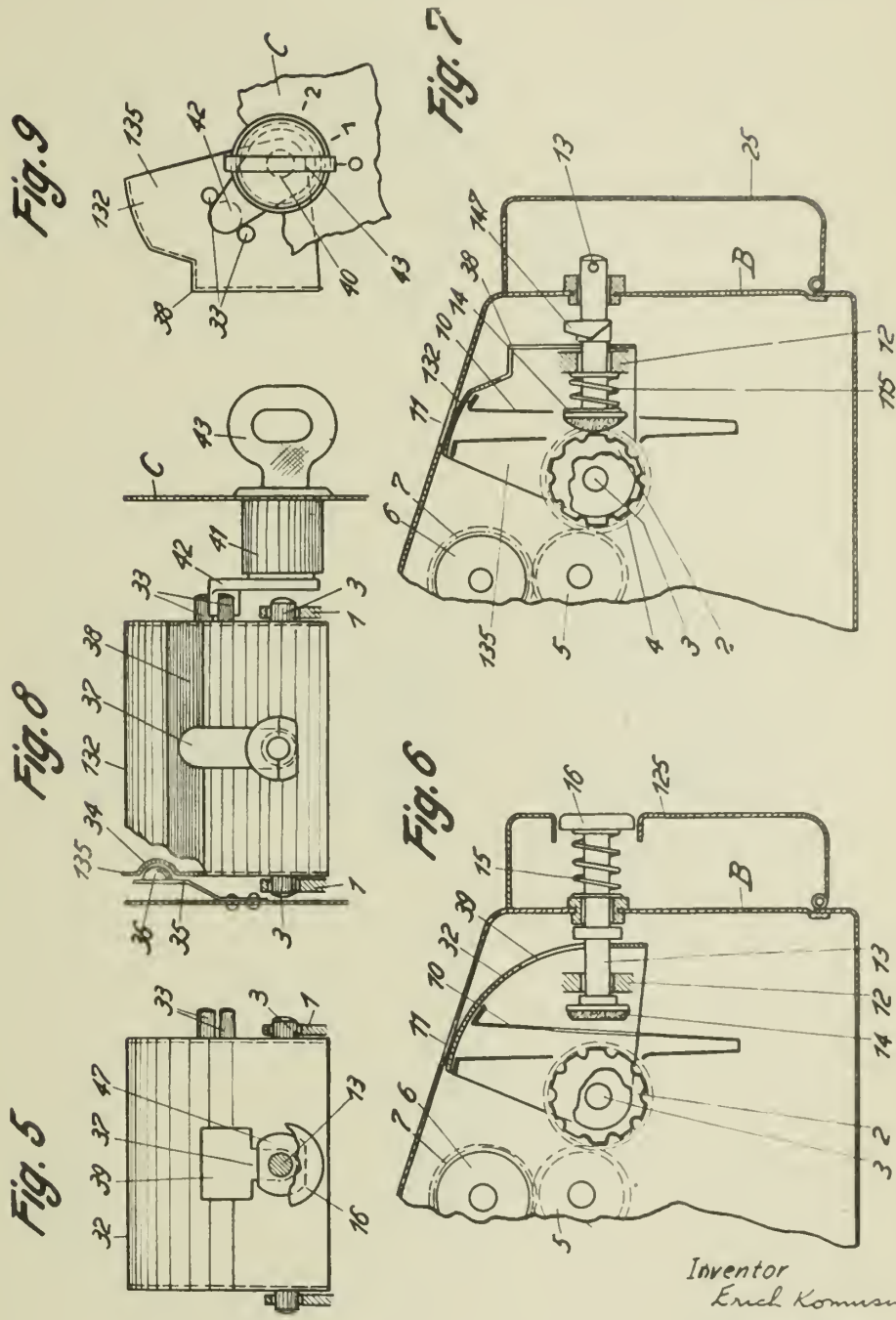

Inventor
Erich Komusin
By Gill & Jennings
Attorneys

PUBLISHED
MAY 25, 1943.
BY A. P. C.

E. KOMUSIN
PRINTING APPARATUS
Filed July 21, 1939

Serial No.
285,684
4 Sheets-Sheet 4

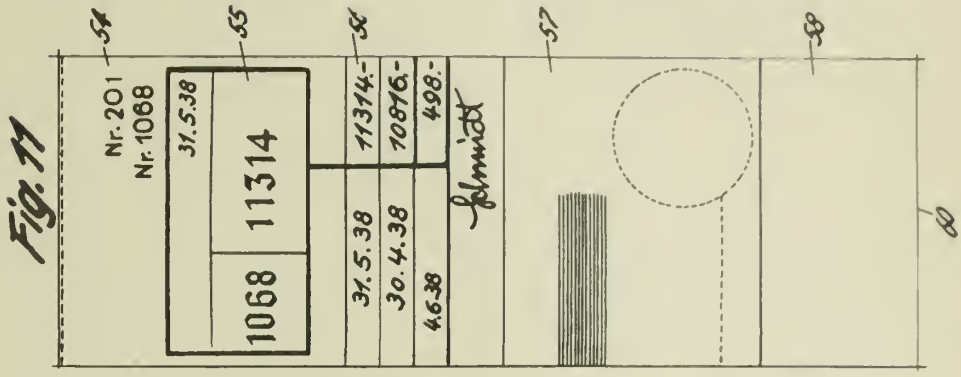

Fig. 11

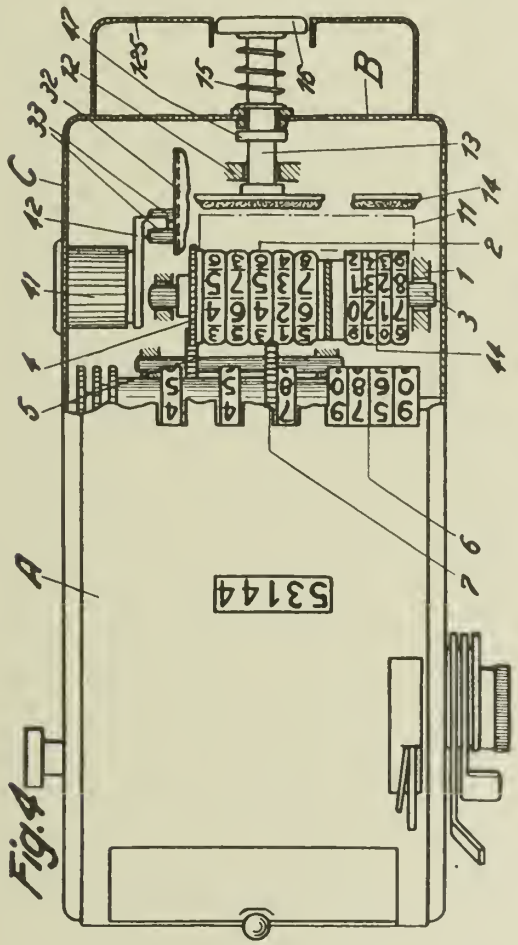

Fig. 4

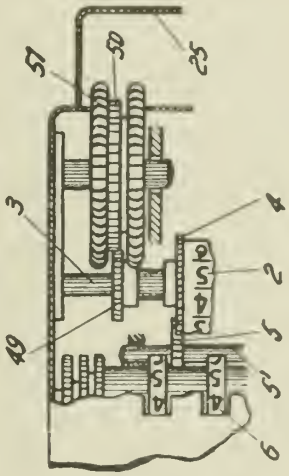

Fig. 10

Inventor
Erich Komusin
By Gill & Jenning
Attorneys

Published May 25, 1943

Serial No. 285,733

ALIEN PROPERTY CUSTODIAN

CONTROL ELEMENT FOR STATISTICAL MACHINES

Michael Maul, Berlin-Johannisthal, Germany; vested in the Alien Property Custodian

Application filed July 21, 1939

The present invention relates to a control element for controlling statistical machines and more particularly to a record medium or carrier adapted for handling in such machines which is provided with graphical characters for controlling the statistical operations of the machines in accordance with the different values of the said characters. The instant application is a division of the co-pending application Serial No. 254,525 filed February 4, 1939.

In technics, compilation of the data of data carriers takes place in several different ways but chiefly in such a way that the data carriers govern the control of machinery in a certain manner. For instance, printing telegraph and type setting machines may be controlled by perforated strips representing the data carriers and upon which the data are symbolically represented by perforations. In other branches of technics the data carriers used for control assume the form of tickets or cards. Compilation of data represented upon cards is necessary to a large extent particularly in bookkeeping and in statistical work, although in this instance the representation of data upon strips has also become known. The compilation of the data may take place in this line of work through assorting according to certain characters or numbers, or by accumulation of the latter, or by some other calculatory compilation or handling of the data. Due to its physical characteristics, the data may cause control of machinery as is done in the known perforated record card system.

Now, it has already been suggested to depart from the perforated card system for the representation of data for the control of statistical machines by representing the data by graphical characters printed on cards and to use said graphical characters for the direct control of the operations of such machines. The use of graphical characters greatly facilitates reading of the data which is to be used for control purposes. Since the graphical characters must cause a differential control depending upon their meaning, they must also differ in a certain manner perceivable by the machines and the type of a printing device for such graphical characters must be provided accordingly. Among the known suggestions is one according to which each numerical character has one to four predetermined spots to be analyzed in the compilation operation (see U. S. Patent 1,853,443). These spots may be called "index marks" and correspond to identical index marks of the type. The index marks are provided for all characters on predetermined "index positions", in an analogous manner as one speaks of the provision of holes on "hole positions" in the perforated card system. The type of the set of type for printing the characters are so selected that each type shows a different combination of index marks, whereby the character may be unequivocally determined. In this connection, an index mark combination may include a single mark only. The location of the index positions, which is the same for all type of a set of type, is determined relative to a fixed point, such as the middle of the type plate, or relative to a given bodily edge such as the type lever on which the type is provided. The index positions, properly located, form together the "index position system". Due to the above mentioned differences in the configurations or outlines of the characters obtained by such type, in which the index marks are contained wholly within the outlines of the characters, analysis of these characters by sensing means including light responsive means can be effected for controlling the operations of the machines in accordance with the meaning of the analyzed characters.

Now, according to the present invention the shapes of the characters recorded upon the record medium are so selected that the index marks of the various characters are all on one unequivocally determined straight line. If such characters are used, the analyzation thereof may be effected in a very simple manner because it is then only necessary to move the printed characters past a light sensitive photoelectric cell. For the compilation of the characters, only a single light electric cell is then necessary. This manner of operation is not possible with the known types of characters since the index marks of the type are arranged arbitrarily within the field circumscribing the type or the printed character respectively.

The characters recorded upon the record medium according to the invention may also be provided with combinations of index marks contained wholly within the outlines thereof in an advantageous manner in various other ways. In a preferred embodiment the index marks of the printed characters may be formed along a vertical line of the individual character. Thus the analysis of such characters may be effected in a simple manner by moving the characters in the direction of this vertical line past the light sensitive cell, as analogous to the analysis of perforated record columns in record cards by moving the same past a single analyzing brush.

Now, it is also already known and, for instance,

quite usual in telegraphy to analyze the characters of a number or of a word one by one in cross direction of the characters. In the perforated record card system this manner of analysis is known as "cross compilation". In order to permit such cross compilation in a simple manner, the printed characters according to the invention may also be provided in such way that the index marks are upon a horizontal of the characters. A particularly preferred embodiment of the invention will, however, be obtained if the shape of the printed characters are so selected that all the characters have index marks upon a vertical as well as upon a horizontal wherein, of course, the index marks on the vertical as well as the index marks on the horizontal are co-ordinated to a respective index position system within which the characters differ by different combinations of index marks. With this embodiment of the invention the type of characters shape is preferably so selected that in certain characters an index mark is present in the crossing point between the vertical and the horizontal and such index mark is common to both index position systems.

Analogous to a known suggestion according to which combinations of perforations may be formed in a differential manner by points and slots (see for instance U. S. Patent 1,976,352), the index marks in the present invention may be provided as point-like as well as line-like sections of the printed characters so that characterizations thereof by different combinations of index-points and index-lines is obtained. However, this arrangement requires that an index line extends at least over a length corresponding to two index positions.

In a further preferred embodiment of the invention, the shapes of the printed character are so selected that each character has an index-point or index-line on the end of the straight line. In the vertical, preferably the lowermost index-point, and in the horizontal, preferably the index-point at the extreme left is selected for this purpose. It is true that this arrangement requires more index positions than the other arrangements, but it affords the advantage that in the analysis of the characters, the first analyzing point corresponds always to an index mark of the character and thereby at the same time the location of the index position system is unequivocally determined.

The safety in the analysis of the characters printed by the type may be considerably increased if between adjacent index marks on the straight line of the type, a distance of at least half of the width of the line of the type is provided. However, a minimum distance corresponding to the whole width of the line of the type is even more desirable. It is not absolutely necessary that all type can be circumscribed by the same figure. Preferably, however, the printing type are so selected that the vertical and the horizontal assumed through the edges of the type of a set of type result in the same figure for each type, for instance, a rectangle or a square. Due to this provision, not only an equal picture of the printed type is obtained, but this circumstance may also be made use of in the analysis of the characters derived from such type to determine the position of the figure circumscribing the type, thereby enabling determination of the location of the straight line of the index position system arranged within said figure.

The above mentioned preferred embodiments may be applied, of course, singly as well combination in one and the same set of cl ters. It is also quite clear that the inv may be applied in character having differe lations between the width and heigh characters. In the embodiments still to scribed, characters are shown in which t lation of the height to the width is 3:2 and characters in which the height is about the as the width.

Provision of the type of characters acc to the invention may be made in typin printing mechanisms of various kinds alt preferably in such printing devices servi the preparation of record cards, tickets, c ord strips for the purpose of accounting b chinery, or for telegraph strips. These ar some of the best known possibilities. It is obvious that printing may also be effect hand setting or by a stamp if desired.

It is, therefore, an object of the prese vention to provide a record medium adapt controlling the operations of statistical ma in accordance with the graphical characte posed thereon and the outlines or configu of the characters being formed so that more index marks are formed by the sai lines and arranged with the marks in a st line and in a distinct index mark combi as located with regard to an index point s

Another object is the provision of a medium for controlling the operations of tical machines in accordance with the gra characters disposed thereon, the outlines characters being formed so that a predete code of index marks arranged in a straig are contained wholly within the said o and wherein the said straight line of index is either horizontal or vertical.

A further object resides in the provisio record medium having graphical charact described and each character being provide two sets of index marks, one on a hor line and one on a vertical line arrange respect to two index position systems.

A still further object is the provision of ed characters as described wherein each acter contains an index mark at the san position of their respective position lines.

A still further object is the provision of characters as described the configurati which are such that the same size rectang be formed by circumscribing anyone of the acters with vertical and horizontal lines an thermore that the line of index marks are in the same position on each character r to the rectangle.

Further objects of the instant invention in any novel feature of construction or tion or novel combination of parts pres the embodiment of the invention describe shown in the accompanying drawings w within or without the scope of the ap claims and irrespective of other specific ments as to the scope of the invention con herein.

In the drawings:

Fig. 1 shows diagrammatically a through a typewriter-like mechanism.

Fig. 1*a* is a top view of the device of

Fig. 2 shows diagrammatically a through a printing device provided with typ

Figs. 3 to 10 each show a set of printin provided in the manner according to the tion, as well as prints of said type and th

grammatic representation of the index marks of the type in connection with a print.

Fig. 11 shows diagrammatically a top view of a typewriter with numerals and letters.

Fig. 11*a* shows a diagrammatical representation of a printing device as it is particularly suitable for telegraph strips.

Figs. 12 to 12*c* show in the same manner of representation as Figs. 3 to 10 a set of 36 characters, namely the 10 numerical characters and the 26 letters which differ from each other by the arrangement of the index marks.

Fig. 13 shows the arrangement of the index marks lying upon the horizontal for the various characters of Figs. 12 to 12*c*.

Fig. 14 shows the index marks lying upon the vertical of the characters of Figs. 12 to 12*c*.

Figs. 15 to 19 show record mediums having the different types of characters printed thereon.

Before describing the record medium which is the subject matter of the instant invention, a brief description of suitable printing devices will be made. In Figs. 1 and 1*a* a typewriter-like device has been illustrated and in order for the description to be brief is shown to be adapted only for printing numerals. Accordingly, this device has a set of numeral keys **10** adapted to actuate the rock levers **12** through key levers **11** and intermediate levers **11***a*. On the rock levers **12** are provided the type bodies **14** which are shaped in any one of the ways shown in Figs. 3 to 10. In Fig. 1*a* the type shown in Fig. 5 are fastened upon the type bodies **14**. Upon depression of a key, the corresponding type of the type body **14** will be moved, together with the ribbon **17**, against the data carrier, provided in the present instance as card **16**, and the corresponding numeral will be printed thereupon. The carriage **15** carrying the card **16** is shifted step by step in the manner well known in the typewriter art.

In Fig. 2 a printing device having type bars as often used in statistical machines has been illustrated. A series of stops **21** is provided with each stop being movable to the position of **21***a* by the operation of a corresponding control element (not shown). A lever **22** engages cam **18** to be raised thereby and acts through spring **19** to raise type bar **20**. Mounted on the upper end of type bar **20** is a series of elements **25** carrying type **14** on their ends for cooperation with a ribbon **17** to print upon a card **16** in carriage **15**. Type bar **20** will be raised until portion **20***a* engages stop **21***a* to position the desired element **25** for printing by the type carried thereby. Hammer **26**, carried on pivoted lever **23**, will then be moved to strike the selected element **25** to effect printing of the desired character. Only one type bar may be provided and the carriage **15** in Fig. 2 may be shifted step by step. However, it is also possible (as is known in statistical machines) to use a plurality of control elements to adjust a plurality of type bars simultaneously to effect printing of several characters.

Figs. 3 to 10 show the printing type in a very much enlarged scale as well as the printed characters formed thereby and the index mark arrangement for each printed character. Each figure is shown in two groups, the numerals 0 to 4 and the numerals 5 to 9. The uppermost row shows the printing type which are visible in mirror reading, while the row below shows a print of such type. The third row shows the contour lines of the print which correspond to the edges of the printing type and this row shows further by black square points or rectangular lines the index marks corresponding to the various printed characters. The outer casing in the first and third as well as in the fourth and sixth row of each figure corresponds to the contour of the type body **14**. In the third and sixth row, horizontals and verticals are shown through the outermost edges of the print indicated in dotted lines and in this row the same rectangle is obtained for each character. For the purpose of representation the straight line of the index position system has not been drawn through the printing type themselves in the first and fourth row, but because it is clearer and easier to understand the straight lines are indicated in the printed characters shown in the third and sixth row.

In Fig. 3, four index positions are provided lying upon a vertical line through the printed character and the smallest distance between the index marks is larger than the width of the outline of the character. It may be seen that in this figure, as well as in the following ones for each character, a different combination of index marks is obtained by which each character is unequivocally determined. In Fig. 15 a suitable record medium **30** for controlling the operations of statistical machines is shown and comprises a record card similar to the regular well known Hollerith tabulating card upon which the characters **31** are formed, the said characters corresponding to the enlarged printed characters shown in Fig. 3.

In Fig. 4 the index marks are arranged upon a horizontal and the smallest distance between the index marks is equal to one half of the width of the outlines of the characters. In Fig. 16 the record card **30** is shown with characters **32** disposed thereon which corresponds to the enlarged printed characters shown in Fig. 4.

In Fig. 5, two index position systems are shown the one being on a vertical and the other on a horizontal line. It will be seen that each character is characterized by a distinct combination of index marks upon the vertical line and another distinct combination of index marks upon the horizontal line.

In Fig. 17 the record card **30** is shown with characters **33** disposed thereon which correspond to the enlarged printed characters shown in Fig. 5. Record cards provided with these characters are particularly adapted for controlling machines using either vertical or horizontal characters analyzing devices for controlling the operations in accordance with the characters analyzed.

While in the characters shown heretofore four index positions for the index marks are provided, the characters according to Figs. 6 to 8 are provided with only three index positions occupied by index marks in the form of index-points and index-lines, one index-line extending over a space of two or three index positions. It will be seen that in Fig. 6 different combinations for the numerical type are obtained upon the vertical. In Fig. 7 a system similar to that of Fig. 6 is applied. However, the index marks are provided upon a horizontal. Fig. 8 shows a combination of the index position systems of Figs. 6 and 7, i. e. the characters have distinct combinations of index-points and index-lines according to the vertical as well as according to the horizontal.

In Fig. 18 the record card **30** is shown with characters **34** disposed thereon which correspond to the enlarged printed characters shown in Fig. 8. Since these characters show the combinations of the index-points and index-lines in the vertical and horizontal lines is deemed unnecessary

to show the individual record cards with the individual characters showing the individual index position systems incorporated in the characters shown in Figs. 6 and 7.

If it is desirable, as indicated hereinbefore, that the first point of a character to be analyzed is always an index point, four index positions are not sufficient for the numerical characters but it is then necessary to use five index positions for the distinct characterization of the characters. It will then be noted that the first index point on the straight line must always be a point on the outline of each character. Fig. 9 shows a group of characters in which the vertical as well as the horizontal system includes five index points complying with the requirement that in each character the lowermost point of the vertical line is an index point on the print as is the extreme right end point of the horizontal line.

If, for the conditions assumed in Fig. 9, points and lines are used, the shapes of the characters shown in Fig. 10 may be chosen and then only four index positions are necessary, the space of which, however, may also be occupied by lines.

Upon the type bodies **14** of the printing devices diagrammatically shown in Figs. 11 and 11*a* are the printing type provided shown in an enlarged scale in Figs. 12 to 12*c*. The type are moved by means of the type levers **12** against the card **16** movable with the carriage **15** (Fig. 11) as has already been explained in connection with Figs. 1 and 1*a*. Accordingly, in Fig. 11 printing of a record card serving for accounting purposes is assumed.

If the printed characters shown in Figs. 12 to 12*c* are used for purposes of telegraphy or teletyping, the device shown diagrammatically in Fig. 11*a* is preferably applied. In this device strip **50** to be printed is fed step by step by a wheel **51**. The teeth of feed wheel **51** en corresponding special perforations in the pri strip and the wheel will feed said strip pas printing platen **52**. Adjacent the printing **50** is the diagrammatically indicated ribbo against which the type body **14** is rocked by m of the type lever **12**. Of course, in a similar ner as in Fig. 11 a number of type levers and corresponding to the number of characters letters are provided.

In Figs. 12 to 12*c* the manner of illustrati exactly the same as in Figs. 3 to 10. Sin characters are concerned which must be acterized distinctly from each other, at lea index positions are necessary for the index m As may be seen the numeral and letter chara are so shaped that they all differ from each with regard to the index marks upon a verti well as with regard to the index marks up horizontal line. Consequently, compilatio the data in Figs. 12 to 12*c* may be effected ac ing to either the vertical or the horizontal li index marks. The three signs; period, co and double hyphen are also indicated in Fig and are characterized by a distinct index m arrangement.

Fig. 13 shows a record of the index mark rangement with regard to the horizontal an of the numerals, letters and signs of Figs. 12*c*, while Fig. 14 shows the index marks arra ment with regard to the vertical analysis o same characters. It may be seen from this r that each character is unequivocally determ by the index mark combination on the type

MICHAEL MA

PUBLISHED

MAY 25, 1943.

BY A. P. C.

M. MAUL

CONTROL ELEMENT FOR STATISTICAL MACHINES

Filed July 21, 1939

Serial No. 285,733

15 Sheets-Sheet 1

Fig.1

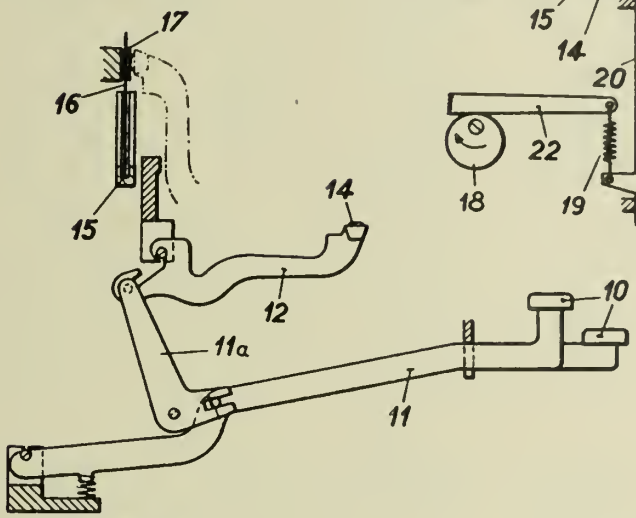

Fig.2

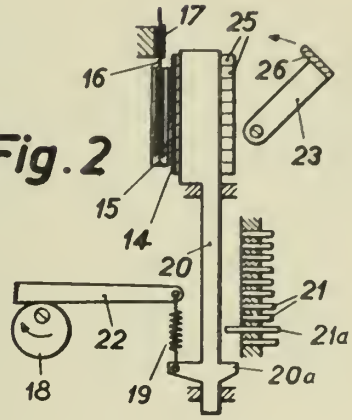

Fig.1a

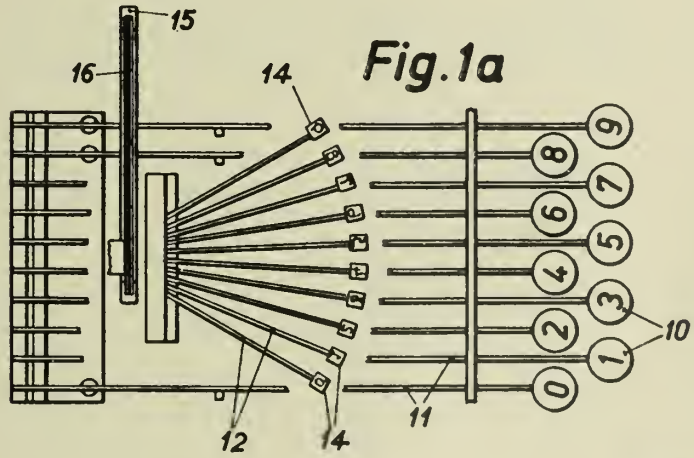

INVENTOR
Michael Maul

BY

A. O. McWilson
ATTORNEY

PUBLISHED
MAY 25, 1943.
BY A. P. C.

M. MAUL
CONTROL ELEMENT FOR STATISTICAL MACHINES
Filed July 21, 1939

Serial No.
285,733
15 Sheets-Sheet 2

Fig. 3

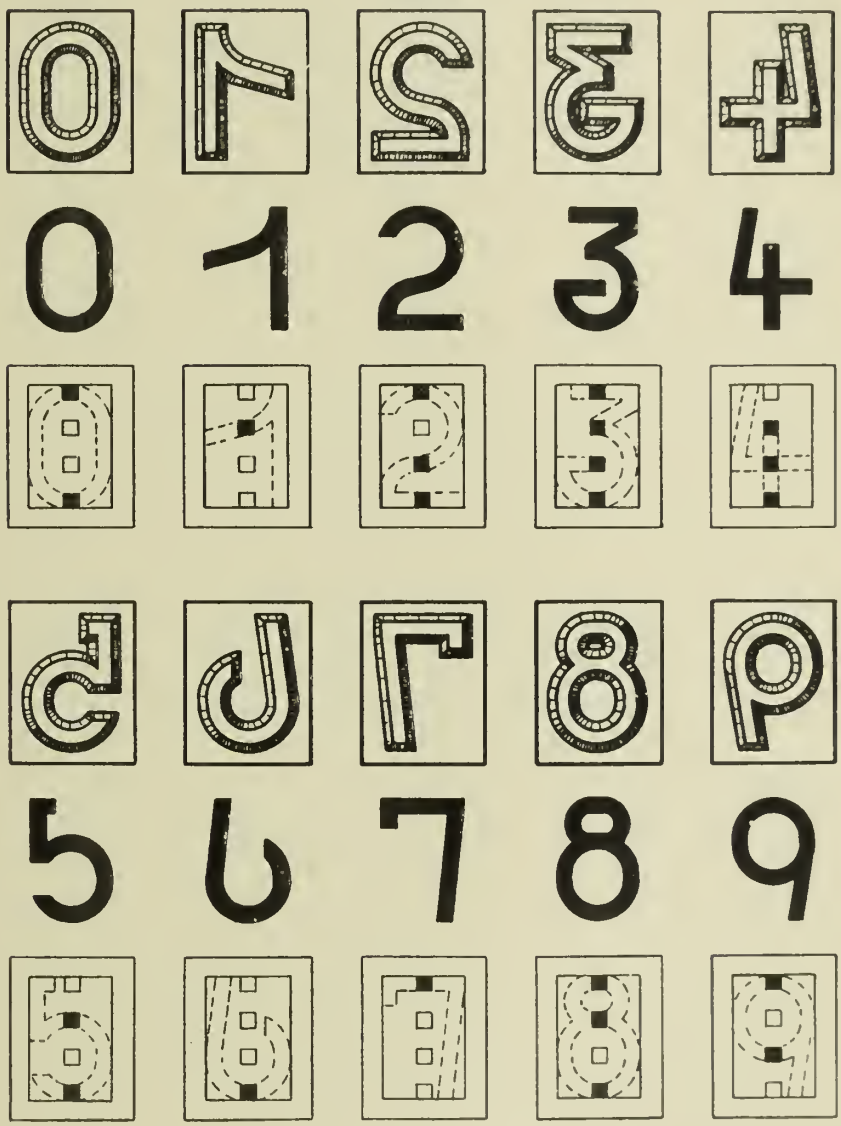

INVENTOR
Michael Maul
BY
W. M. Salter
ATTORNEY

PUBLISHED
MAY 25, 1943.
BY A. P. C.

M. MAUL
CONTROL ELEMENT FOR STATISTICAL MACHINES
Filed July 21, 1939

Serial No.
285,733
15 Sheets-Sheet 3

Fig. 4

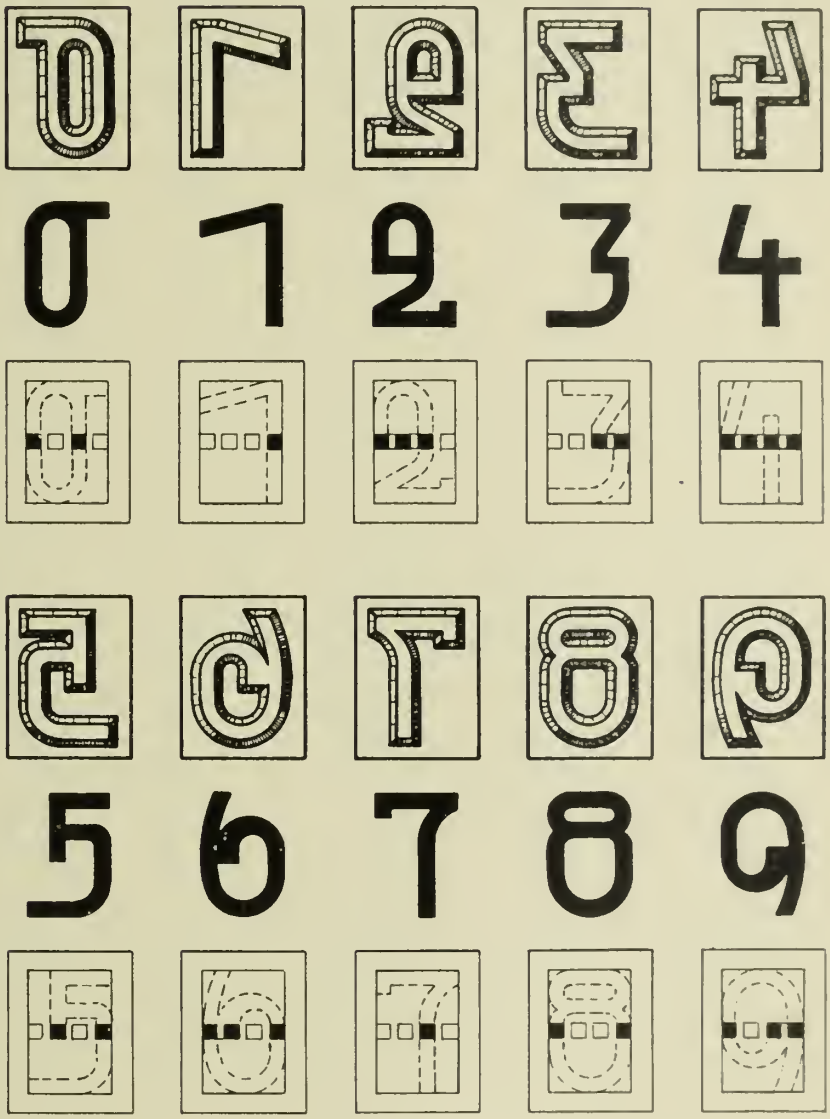

BY

INVENTOR
Michael Maul
ATTORNEY

PUBLISHED
MAY 25, 1943.
BY A. P. C.

M. MAUL
CONTROL ELEMENT FOR STATISTICAL MACHINES
Filed July 21, 1939

Serial No.
285,733
15 Sheets-Sheet 4

Fig.5

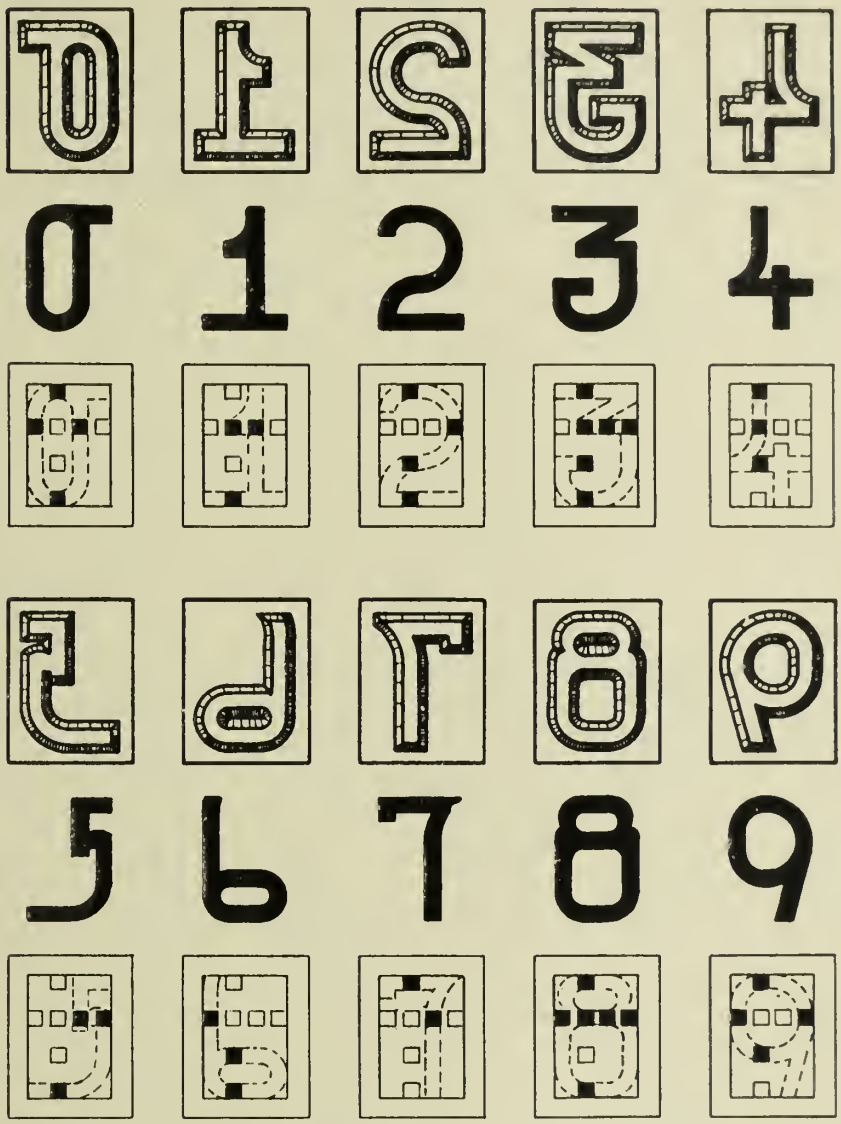

BY

INVENTOR
Michael Maul
W. M. Wilson
ATTORNEY

PUBLISHED
MAY 25, 1943.
BY A. P. C.

M. MAUL
CONTROL ELEMENT FOR STATISTICAL MACHINES
Filed July 21, 1939

Serial No.
285,733
15 Sheets-Sheet 5

Fig. 6

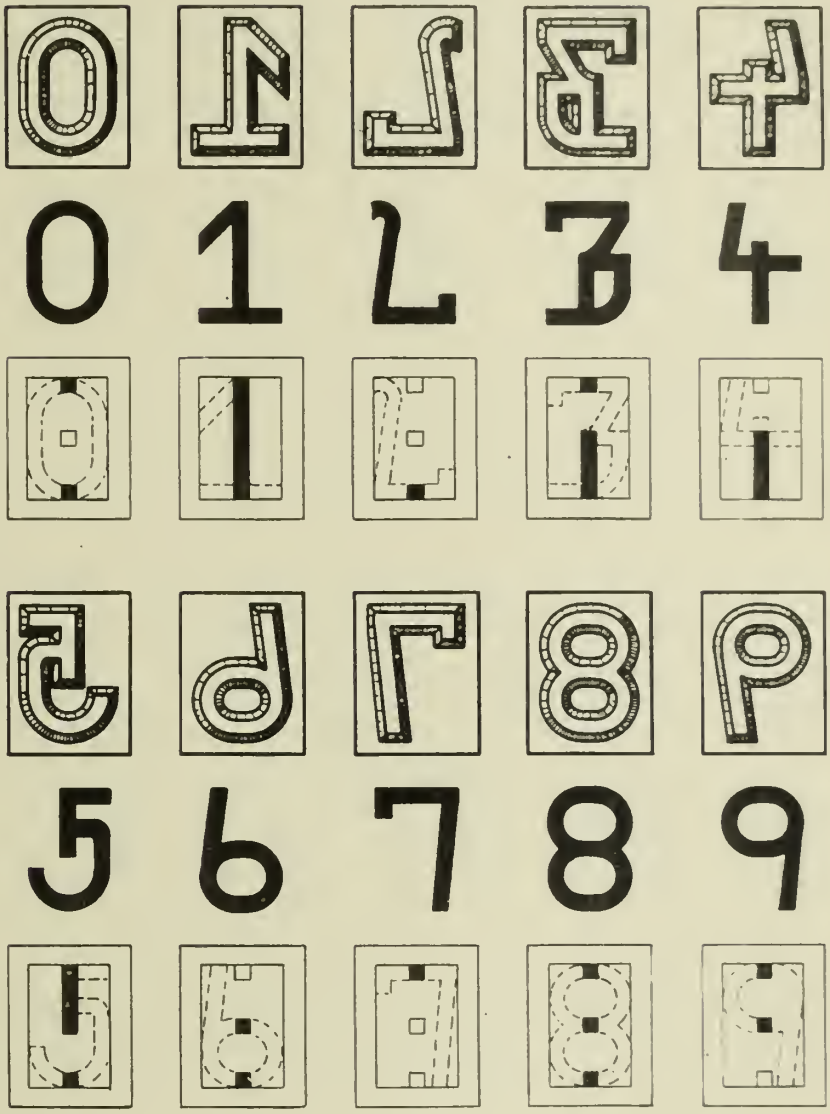

INVENTOR
Michael Maul

BY

W. M. Nelson
ATTORNEY

PUBLISHED
MAY 25, 1943.
BY A. P. C.

M. MAUL

CONTROL ELEMENT FOR STATISTICAL MACHINES

Filed July 21, 1939

Serial No.
285,733

15 Sheets-Sheet 6

Fig.7

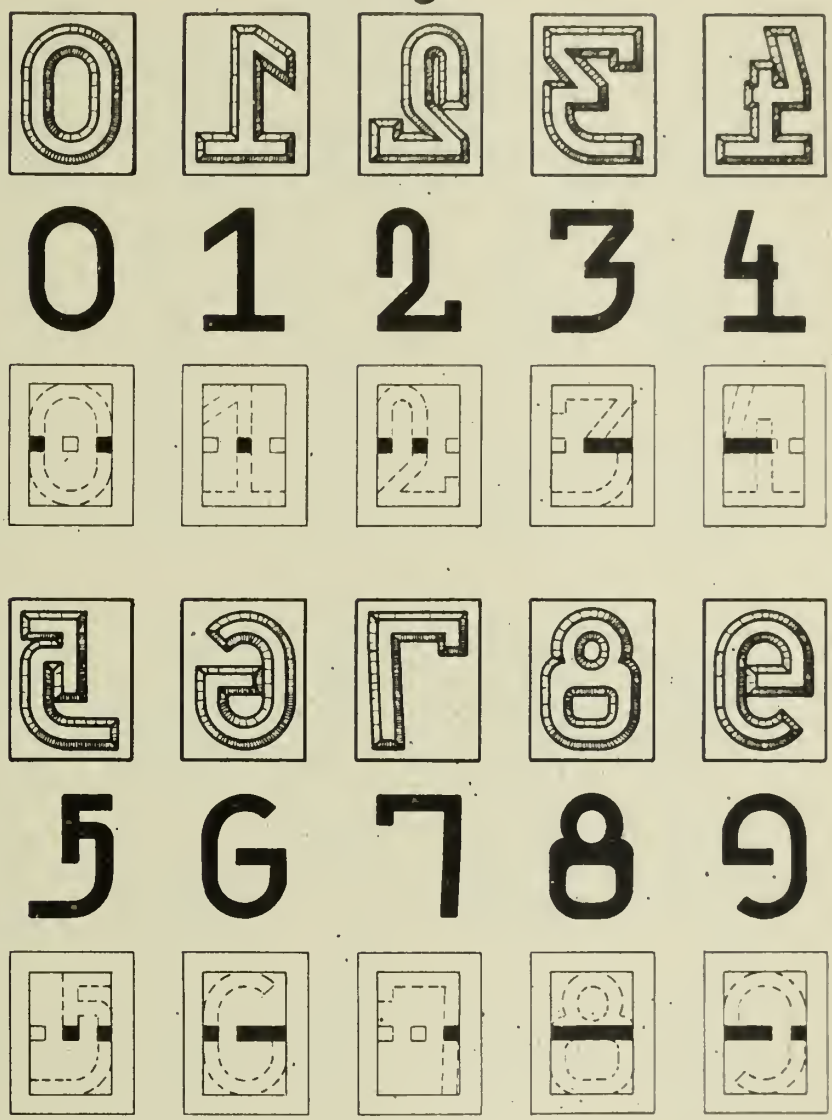

BY

INVENTOR
Michael Maul
W. M. Mahon
ATTORNEY

PUBLISHED
MAY 25, 1943.
BY A. P. C.

M. MAUL
CONTROL ELEMENT FOR STATISTICAL MACHINES
Filed July 21, 1939

Serial No.
285,733
15 Sheets-Sheet 7

Fig. 8

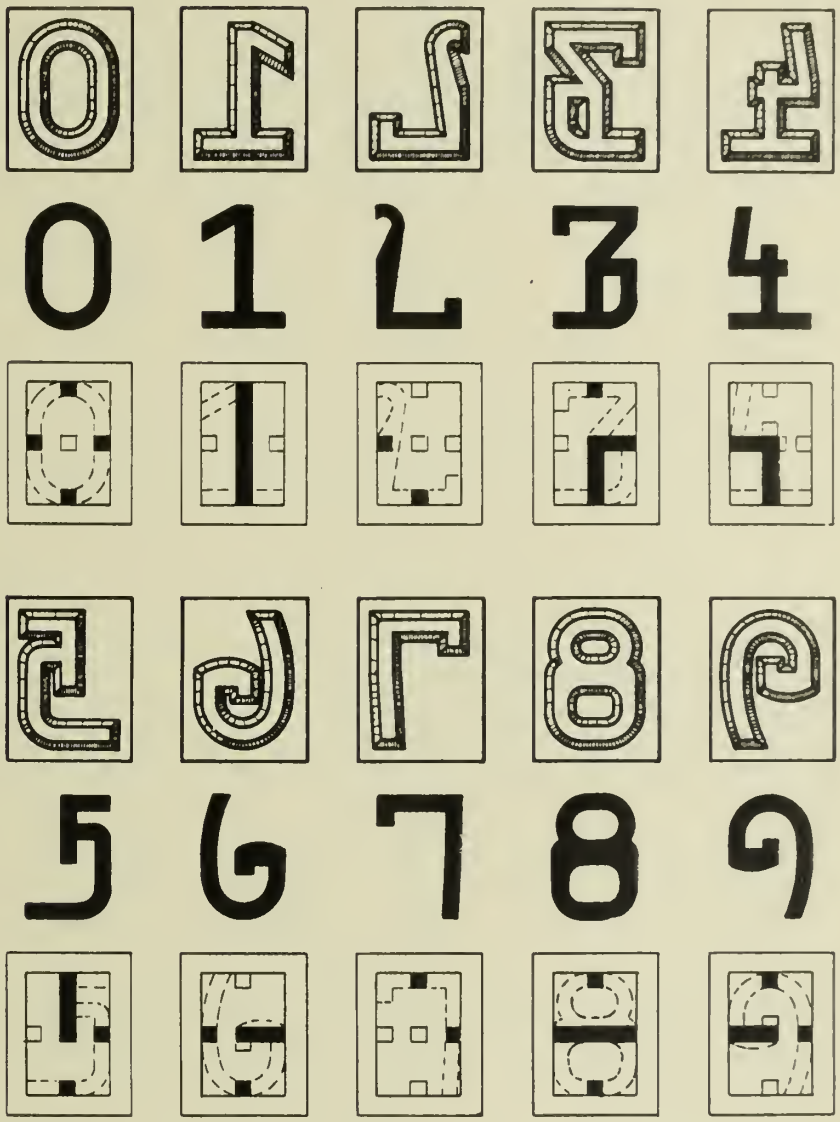

INVENTOR
Michael Maul

BY

W. McIlson
ATTORNEY

PUBLISHED
MAY 25, 1943.
BY A. P. C.

M. MAUL

CONTROL ELEMENT FOR STATISTICAL MACHINES

Filed July 21, 1939

Serial No.
285,733

15 Sheets-Sheet 8

Fig. 9

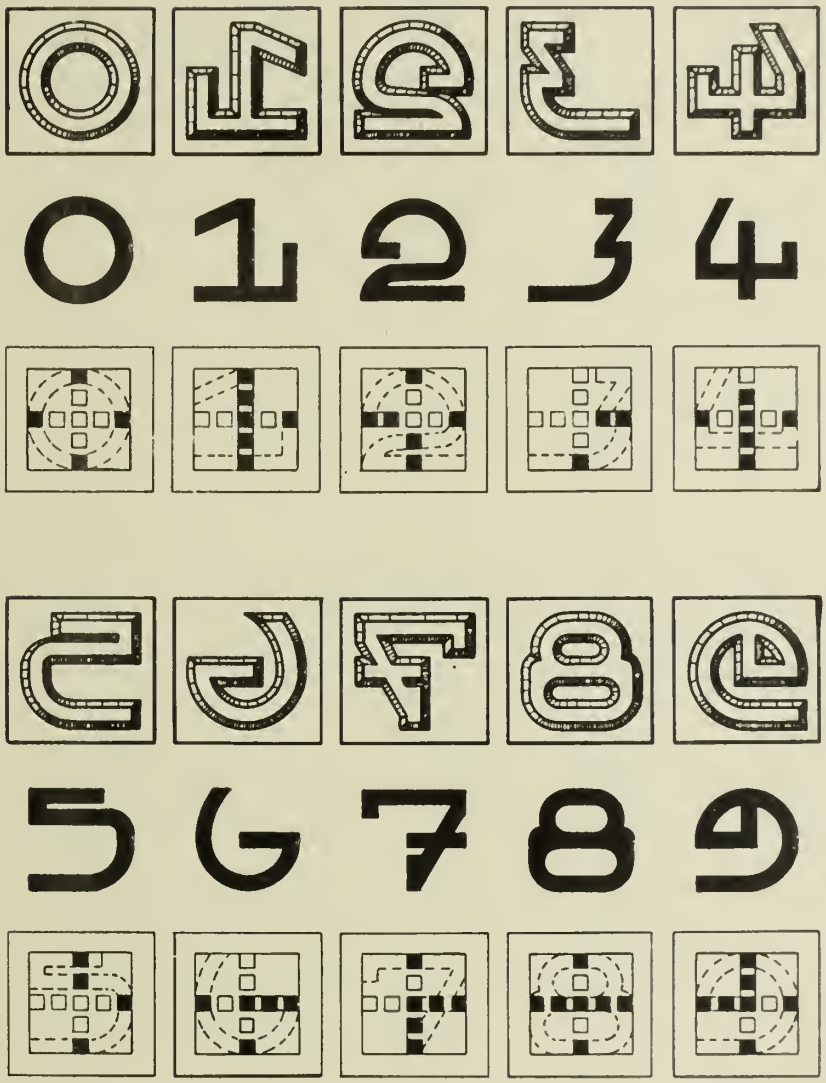

INVENTOR
Michael Maul

BY

W. Mitchell
ATTORNEY

Fig. 10

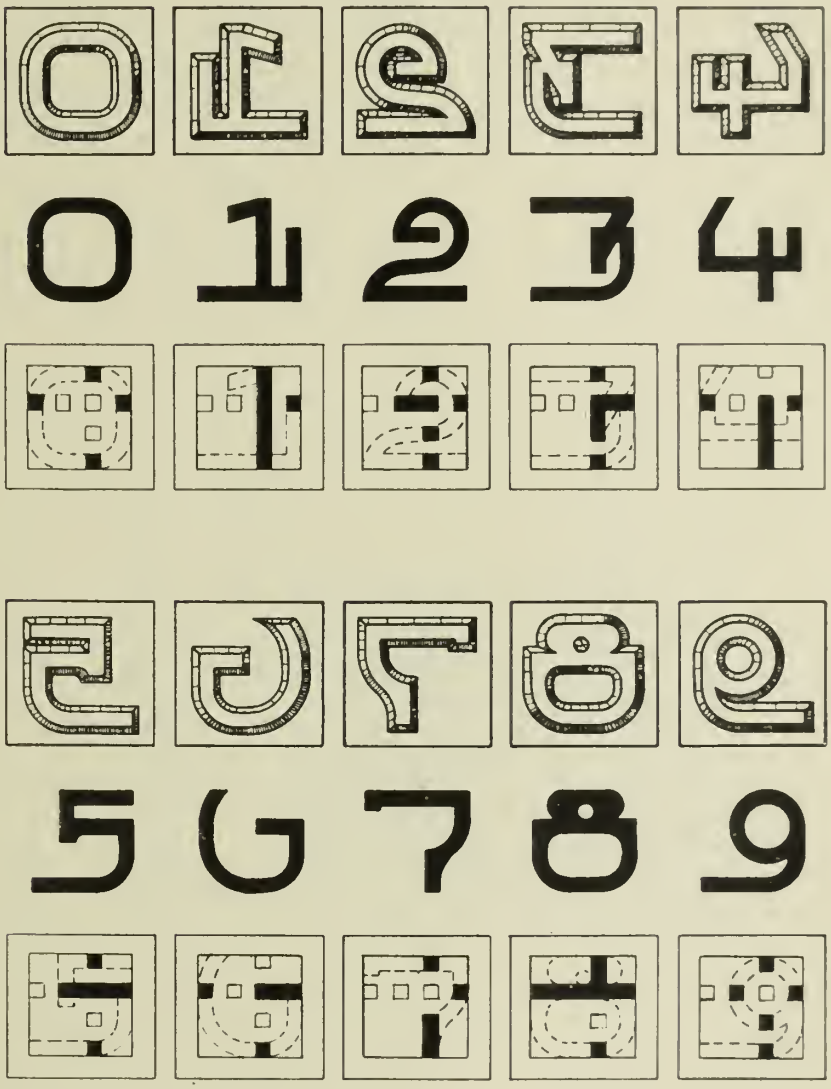

BY

INVENTOR
Michael Maul
W. Mitchell
ATTORNEY

PUBLISHED MAY 25, 1943. BY A. P. C.

M. MAUL

CONTROL ELEMENT FOR STATISTICAL MACHINES

Filed July 21, 1939

Serial No. 285,733

15 Sheets-Sheet 10

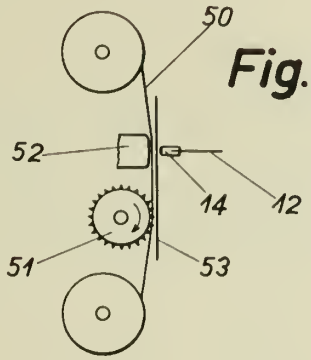

Fig. 11a

Fig. 11

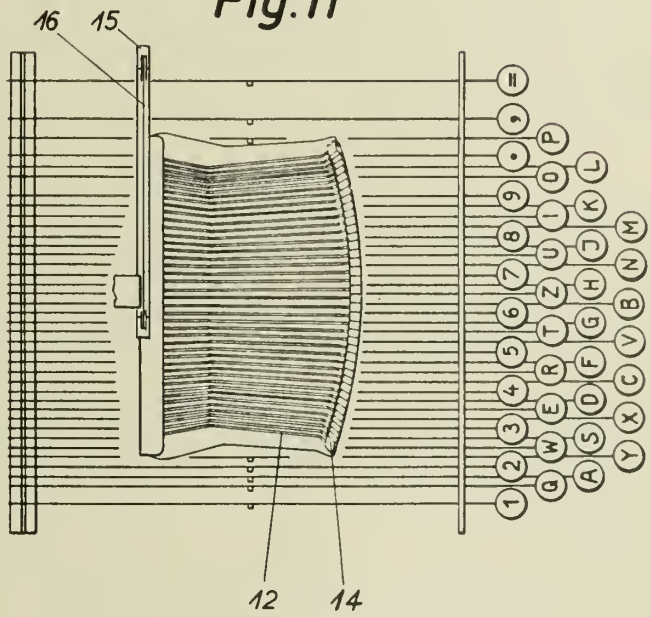

INVENTOR
Michael Maul

BY

W. M. Wilson
ATTORNEY

PUBLISHED
MAY 25, 1943.
BY A. P. C.

M. MAUL

CONTROL ELEMENT FOR STATISTICAL MACHINES

Filed July 21, 1939

Serial No.
285,733

15 Sheets-Sheet 11

Fig.12

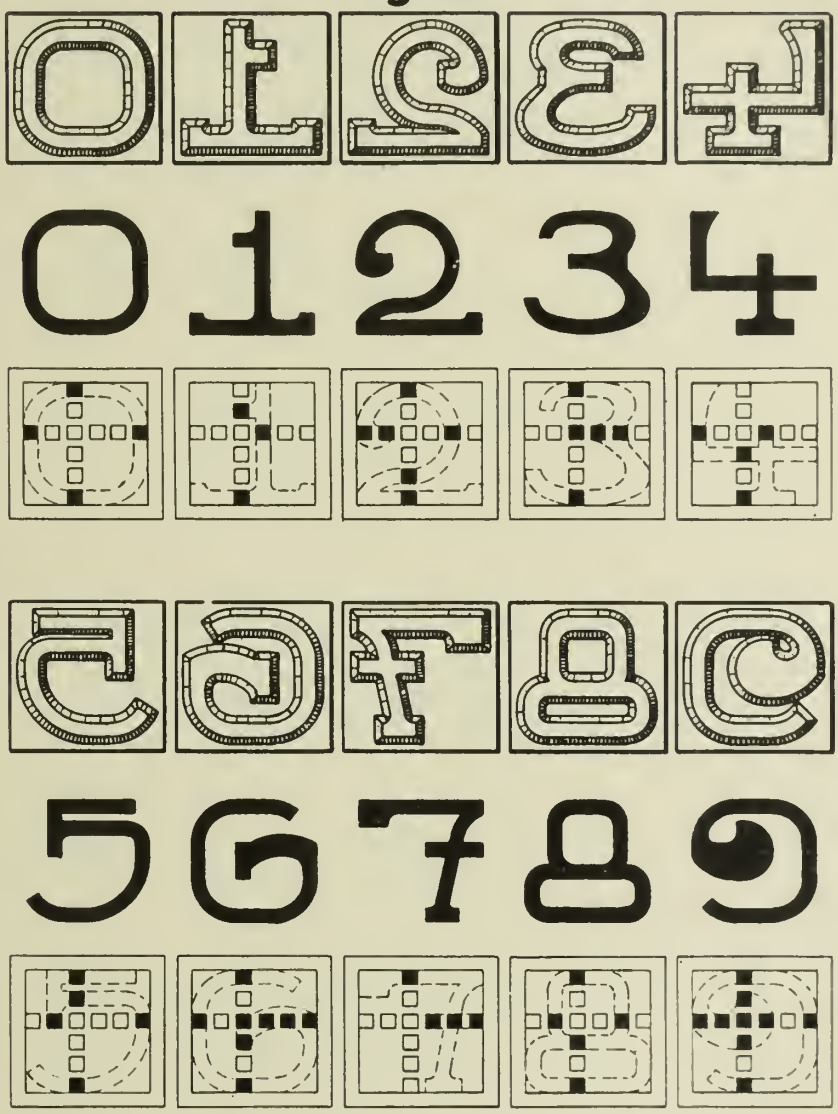

BY

INVENTOR
Michael Maul
W. Mitchell
ATTORNEY

PUBLISHED

MAY 25, 1943.

BY A. P. C.

M. MAUL

CONTROL ELEMENT FOR STATISTICAL MACHINES

Filed July 21, 1939

Serial No. 285,733

15 Sheets-Sheet 12

Fig. 12a

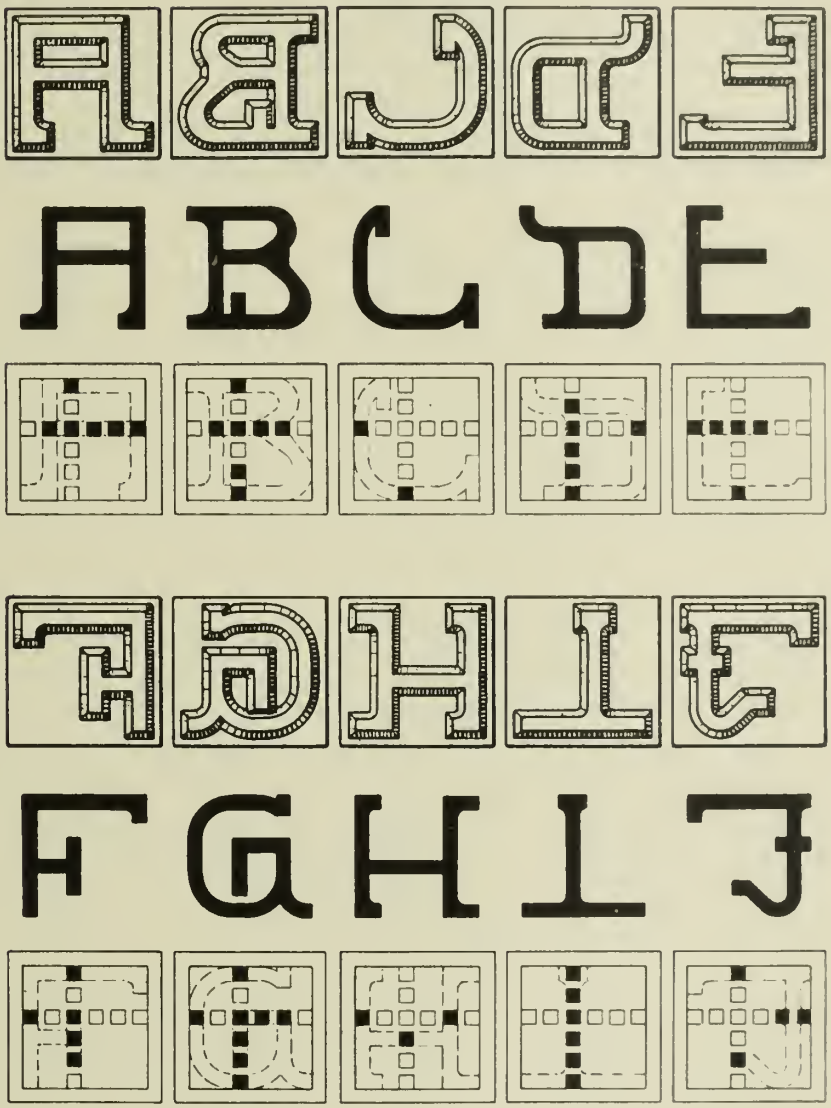

BY

INVENTOR
Michael Maul

W. Wilson
ATTORNEY

PUBLISHED
MAY 25, 1943.
BY A. P. C.

M. MAUL

CONTROL ELEMENT FOR STATISTICAL MACHINES

Filed July 21, 1939

Serial No.
285,733

15 Sheets-Sheet 13

Fig.12b

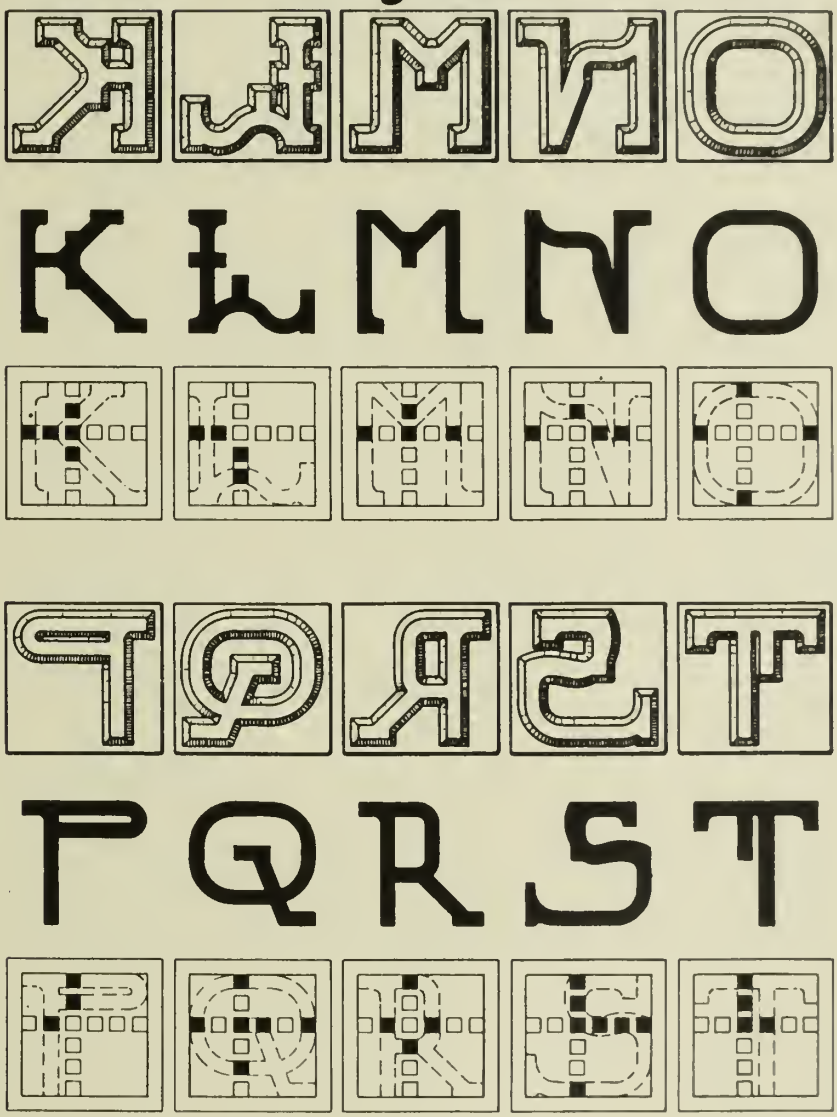

INVENTOR
Michael Maul

BY

W. Milsborn
ATTORNEY

Fig.12c

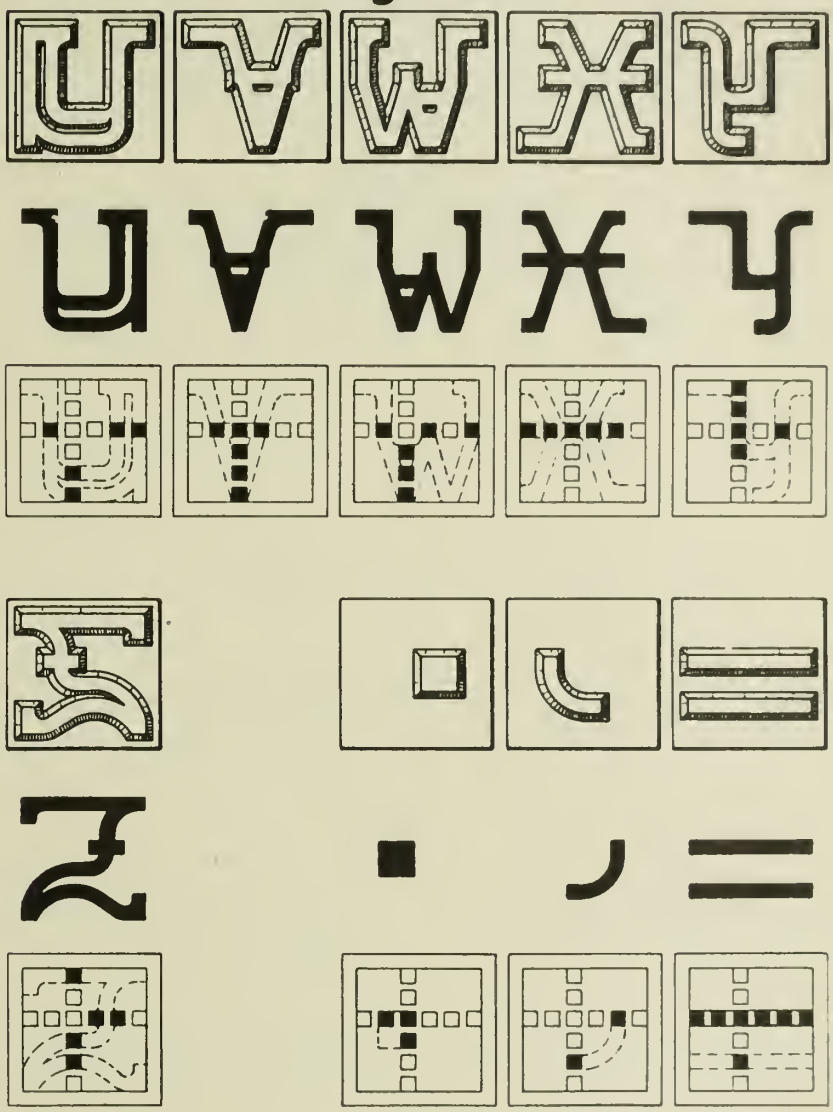

BY

INVENTOR
Michael Maul
W. M. Wilson
ATTORNEY

Fig. 13.

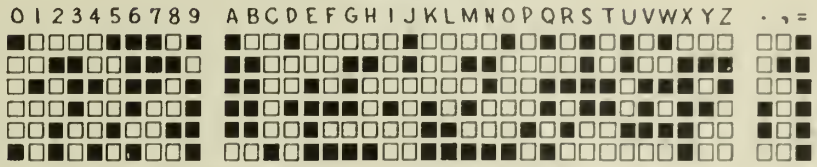

Fig. 14.

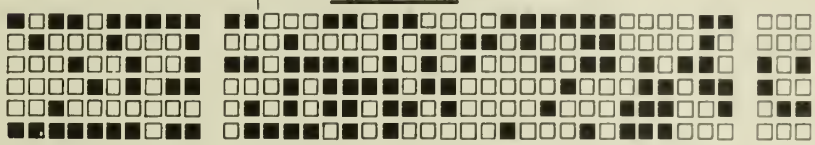

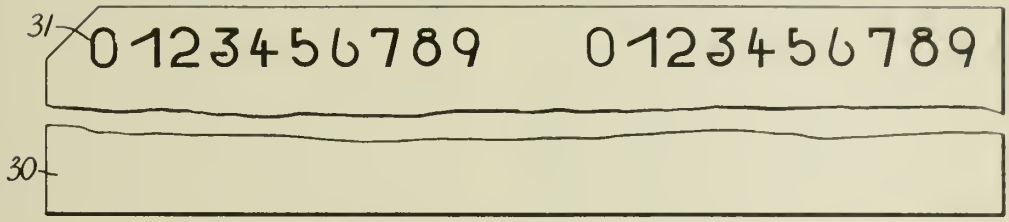

Fig. 15.

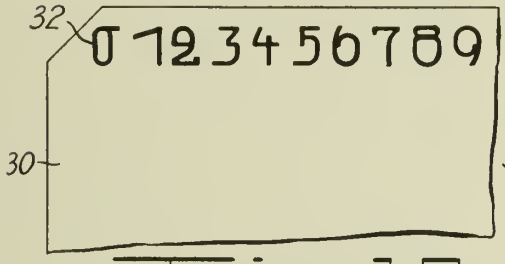

Fig. 16.

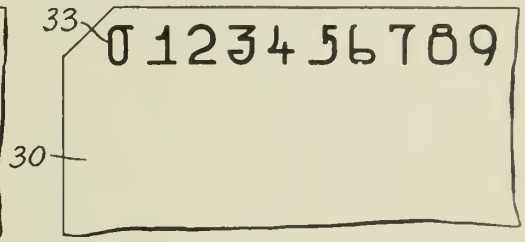

Fig. 17.

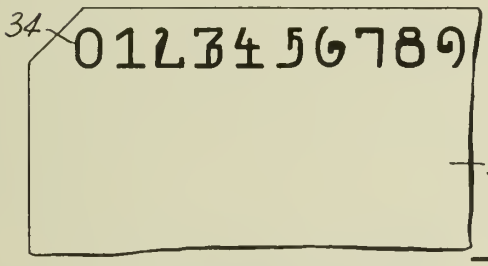

Fig. 18.

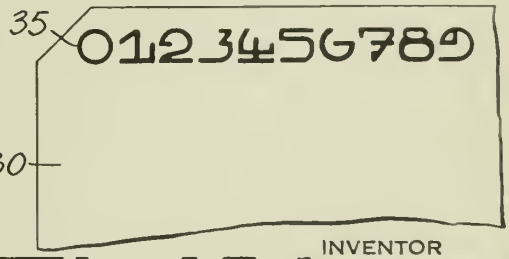

Fig. 19.

INVENTOR
Michael Maul
BY
W. M. Wilson
ATTORNEY

Published May 25, 1943

Serial No. 287,630

ALIEN PROPERTY CUSTODIAN

COMPUTING MECHANISM FOR CASH REGISTER AND THE LIKE

Marcel Demeulenaere, Brussels, Belgium; vested in the Alien Property Custodian

Application filed July 31, 1939

The present invention relates to computing mechanism for cash register and the like, and it has particular reference to mechanism of the kind disclosed in my co-pending patent application Serial No. 17,119 dated April 18, 1935, in which an operating member for controlling a plurality of totalisers extends through successive groups of annular discs or wheels forming said totalisers. In the mechanism described by way of example in my above mentioned patent application, selection of the individual totalisers which are to take part in an entry of an item is effected by an axial movement of the operating member in one direction and the subsequent operations necessary to perform the entry are carried out while the operating member is moved in reverse direction.

It is an object of the present invention to provide a mechanism that will be simpler and more convenient in operation, and in which the parts will move more smoothly than in my prior mechanism.

A further object is to provide a mechanism in which collapsible driving projections are so arranged on the operating member that the operations for selecting the individual totalisers and the operations for registering the amounts by means of the operative totalisers are controlled by a succession of axial movements of the operating member in the same direction, said axial movements alternating with rotational movements of the said member.

Still another object of my invention is to provide a mechanism having two different kinds of individual totalisers, some of them associated with fixed selectors and others with angularly movable selectors, permitting two or more individual totalisers being simultaneously selected by means of a single rotation of the operating member.

Further objects and advantages of my invention will be apparent from the following description taken in connection with the accompanying drawings illustrating by way of example an embodiment of my said invention.

In the drawings:

Fig. 1 is a longitudinal sectional view of the totalisers and indicator of a cash register machine.

Fig. 2 is a longitudinal section on a larger scale of an individual totaliser with the operating member extending therethrough.

Fig. 3 is a cross-sectional view on line III—III of Fig. 2.

Figs. 4 and 5 are views similar to Figs. 2 and 3 respectively showing the operating member in a different position.

Fig. 6 is a cross-sectional view on line VI—VI of Fig. 2, showing the co-operation of an individual totaliser with its operation counter.

Fig. 7 is a cross-sectional view on line VII—VII of Fig. 8, illustrating the selector for a goods totaliser.

Fig. 8 is an end view, partly in section on line VIII—VIII of Fig. 7, of the same selector.

Fig. 9 is a longitudinal sectional view of the indicator and the indicator totaliser of the machine.

The mechanism illustrated in Fig. 1 comprises from left to right: a general totaliser G, two individual totalisers A and B, each having its operation counter A′ and B′ respectively, two further individual totalisers C and D having each its operation counter C′ and D′ respectively, then an operation counter S, an indicator totaliser T and an indicator I. This arrangement is intended to permit, for instance, of registering separately the operations of two salesmen on the individual totalisers A and B hereinafter called personal totalisers and of recording the number of operations on the respective counters A′ and B′, further of separately registering the operations respecting two kinds of goods on the individual totalisers C and D hereinafter called goods totalisers and of recording the corresponding numbers of operations on the respective counters C′ and D′. Simultaneously therewith the general totaliser G totalises all the operations effected during a predetermined period, say one day, and the general counter S records the total number of said operations. By the indicator I the amount of each operation is made visible and the indicator totaliser T adds if desired the total amounts of a plurality of successive operations.

The several totalisers and counters and the indicator comprise each a group of annular discs 10 arranged side by side, said discs having each ten peripheral teeth bearing the figures 0 to 9 or conventional signs as will be explained later. Fixed spacing members 11, 11A etc. . . . carried by the general support 61 separate adjacent groups of discs from each other.

All the individual totalisers being of like construction, I shall describe in detail only one of them, i. e. the personal totaliser A illustrated in Figs. 2 to 5. As shown in Fig. 2, the totaliser comprises from right to left five annular discs 10 having each on its inner periphery ten teeth for operating said discs from the inside and a sixth disc 10° without inner teeth. The six discs forming totaliser A are capable of totalising amounts up to 9999, 99. On the left of disc 10° is a disc 10*a* which has inner teeth that are longer than those on the discs 10 and has outer teeth bearing no figure, but a conventional sign designating the particular totaliser considered, for example the sign A in the present instance. On the left of disc 10*a* are three further discs 10′ without inner teeth, said discs 10′ having

outer teeth bearing the figures 0 to 9. These three discs 10′ form together the counter A′ for counting the number of operations effected by totaliser A.

Through the discs of all the totalisers and through the spacing members 11 extends a rotary shaft 12. The said discs, however, are not carried by the shaft 12 as they are supported on carrying rollers 13, 14, 15, which are respectively carried by shafts 18, 19, 20 extending parallel to the shaft 12. Each disc 10 thus is supported coaxially to the shaft 12, but without contacting same. The rollers 13, 14, 15 engage in annular grooves formed between the outer teeth of the discs and rings 21 secured to the discs.

On the shaft 20 the rollers 15 alternate with pawls 24, pressed each against one of the totaliser discs by a spring 23 (Fig. 3). When they engage between two adjacent teeth on each disc, the pawls 24 hold all the discs in a predetermined angular position, so that the outer teeth of the discs, their inner teeth, and the intervals between teeth are each, respectively, in alignment.

The shaft 12 has a longitudinal groove 16 (Fig. 3) in which a spring controlled bar 17 is slidably arranged. In Fig. 1, the spring is shown at 25 and tends to move the bar towards the right. Opposite each individual totaliser, the bar 17 has an axial recess 26 which extends over its whole depth. In each recess 26 is pivoted on a cross-pin 27 a small lever 28 having at each end an upwardly directed projection, i. e. a driving projection 30 and a heel piece 29. The lever 28 is controlled by a spring 31 which tends to lift the heel piece 29. In this position (Fig. 2) the driving projection 30 projects above the upper edge of the bar 17 only very slightly, that is not sufficiently to engage the inner teeth of the discs 10, but enough to engage the longer inner teeth of disc 10*a*.

The selection of the desired totaliser is operated by means of the fixed members 11 which play the part of selectors, there being in the example illustrated in Fig. 1 a selector 11 on the right hand side of and corresponding to each individual totaliser. The selectors are of different constructions in the case of personal totalisers and in the case of goods totalisers.

A selecter for a personal totaliser, for example selector 11A for totaliser A (Figs. 2 and 5), comprises a ring coaxial with shaft 12, and of larger diameter than said shaft so that a ring-shaped chamber 32 is left between the ring and the shaft. Into said chamber projects a boss 33 on the inner surface of the selector, which boss has smoothly inclined sides in the peripheral direction. When the axial and angular position of bar 17 (which rotates together with shaft 12) is such that the heel 29 comes opposite a boss 33, the heel is depressed against the action of its spring 31 and the projection 30 at the other end of the lever is raised well above the top edge of bar 17 as shown in Figs. 4 and 5. In this position of the lever 28, its projection 30 can engage with the inner teeth on the discs 10 of the totaliser considered which thus is selected.

In the several personal totalisers the boss 33 of each selector 11 is offset by one tenth of a revolution with respect to the boss 33 of the preceding selector. Thus in Fig. 5, the boss 33 of selector 11A is at an angle to the vertical plane passing through the totaliser discs corresponding to one tenth of a revolution and the boss of selector 11B is at angle to said plane corresponding to two tenths of a revolution, so that the

axis of each boss is in line with one of th
of notches between the inner teeth of the
iser discs. It will be understood, therefore
in order to select totaliser A or totaliser
bar 17 has to be moved axially until the h
of each lever 28 registers with one of the
33, then the shaft 12 has only to be r
clockwise from the inoperative position sho
Fig. 3. If the rotation is through one ten
a revolution (Fig. 5) totaliser A is select
has been explained. If the rotation is th
two tenths of a revolution, totaliser B is sel
and thus the mechanism described can o
with as many as ten personal totalisers.

It is necessary to prevent that in a se
totaliser the driving projection 30 be again
in the recess 26 under the action of spring
soon as a further axial movement of bar
break the contact between the heel 29 an
33. To this end the following arrangem
provided in the operating member formed
17 and shaft 12.

A locking blade 34 secured to the shaft
gages in a groove in the side of bar 17, s
it does not interfere with axial moveme
said bar. The lever 28 has a laterally proj
pin 35 and opposite said pin is a notch 36 (
and 4) in bar 17 so that the pin 35 can
move within said notch when the lever 28
about its pivot 27. This movement is p
as the blade 34 is cut away in the vicinity o
notch 36, as shown in Fig. 2 which illustrat
bar 17 in its extreme left position, and in
which illustrates the bar 17 in its selecting
tion. When, however, after the selection
fected, the bar 17 is again moved to the ri
order to drive the discs 10, the pin 35 is
either above the blade 34 if its lever 28 h
lected a totaliser, or below the blade 34 if its
28 has eliminated a totaliser. The levers 2
remain locked during all the time require
the entry of an item, and they are freed
when at the end of the operation the bar
returned to its inoperative position, i. e.
extreme left position shown in Fig. 2.

The counter A′ adjacent to the personal
iser A must record a unit each time said to
is selected in order to partake in an entry
this end, use is made of the disc 10*a* with
inner teeth. Said disc 10*a* (Figs. 2 and 6) h
cured thereto a ring 21*a* which carries a c
arranged to cooperate with a finger 39
member 40 loosely mounted on the carry
shaft 47 which extends parallel to shaft 12.
angular position of cam 38 is such that w
rotates with shaft 12 and disc 10*a* throug
tenth of a revolution during the selecting
ation, cam 38 pushes on finger 39 at the
moment when totaliser A is selected by the
tact of heel 29 with the boss 33 of selecto
At this moment a transfer member 42 secu
member 40 and facing the first disc 10′ (i.
first from right to left in Fig. 2) of count
has rotated with member 40 so that its nose
in a preparatory position and lies in the pa
one of the arms 44 fixed on a shaft 45 who
tation makes the transfers effective whe
entry is completed, as explained in my co-pe
patent application Serial No. 17,119.

Then, under the impulsion received fro
of the arms 44, the nose 43 is rotated cloc
with member 42 (Fig. 6). The tooth 41 on
ber 42 comes into mesh with the teeth o
first disc 10′ of counter A′ and causes sai
to rotate through one tenth of a revolution,

corresponds to the recording of one unit by the counter.

In totaliser B, the cam **38** is angularly offset by one tenth of a revolution backwards with respect to cam **38** of totaliser A. Thus in totaliser B the cam **38** places the member **40—43** into its preparatory position when the operator rotates the shaft **12** through two tenths of a revolution and selects totaliser B. In that case, the cam **38** of totaliser A having also rotated through two tenths of a revolution, leaves the corresponding finger **39** which is returned to its inoperative position together with its member **40—43** by a spring **46**. Thus the counter B′ will record one unit when the personal totaliser B has taken part in an entry.

It will be seen that the discs **10′** of the counters (Figs. 1 and 2) do not require inner teeth since they are always driven from the outside by transfer members and not from the inside by driving projections such as **30**.

The goods totalisers C and D are similar to the personal totalisers A and B, but their respective selectors are different from those described above in connection with the personal totalisers. One of the goods selectors is illustrated in sectional side elevation in Fig. 7 and in end elevation in Fig. 8. In a bore in the fixed member **11** situated on the right side (Fig. 1) of the totaliser considered, is rotatably mounted a ring **48** controlled from the outside by means of a handle **49** or in any other suitable way. Axial movement of ring **48** is prevented by a screw **50** which engages in a peripheral groove **51** in ring **48**.

On its inner periphery the ring **48** has, on a portion only of its width, ten bosses **52** uniformly distributed over the periphery of said ring and separated from one another by notches **53**. So long as the totaliser in question is not selected, the notches **53** are in line with the respective lines of notches between the inner teeth of the totaliser discs **10**. In order to operate the selection of a goods totaliser the handle **49** with the ring **48** is rotated through one twentieth of a revolution so as to bring a boss **52** to a place normally occupied by a notch **53**. Then, when the shaft **12** is rotated through any required amount of tenths of a revolution in order to select a personal totaliser, the lever **28** of the said goods totaliser partakes in this rotation and its heel **29** stops under one of the bosses **52** so that the goods totaliser is selected at the same time as the personal totaliser.

The goods counter C′ (or D′) of the goods totaliser which has been selected is actuated, like the counters A′, B′, by a transfer member **54** similar to member **42** and carried by the same shaft **47** (Fig. 8). However member **54** is not brought to its preparatory position by a cam rotating with one of the discs, but directly by a bent rod **55** carried by the ring **48**, the end of said rod **55** pushing the nose **56** of member **54** when the ring **48** is rotated by means of the handle **49**. This rotation, which is as stated through one twentieth of a revolution, is limited in one direction by the rod **55** itself which, when the totaliser is selected comes to lie against an abutment **57** on the support **11**. In the other direction, the rotation of handle **49** is limited by a bar or stop **58** which is secured to the parts **11**, as shown in Fig. 8.

When an amount is registered by one or more individual totalisers A, B, C, D, it is also registered by the general totaliser G. As the general totaliser does not give rise to a selection, it is not driven by a collapsible projection **30**, but is operated by a member or projection **60** which is simply fixed on bar **17**. As shown, totaliser G has eight discs **10**, five being with inner teeth and three without inner teeth. The last three discs which correspond to the higher numerical order (thousands, tens of thousands and hundreds of thousands) cannot be driven directly by the projection **60**, but they are capable of being actuated by the transfer of units from the discs of a lower numerical order. This also applies to the "thousands" disc (the sixth from the right in Fig. 1) of each of the individual totalisers A, B, C, D. The carry-over mechanism being composed of parts similar to parts **40—43** need not be described in detail.

The indicator I indicates each item entered, and therefore it is also actuated by a projection **60** fixed on member **17**. As the indicator is zeroized after each operation, it does not call for a transfer and it comprises only five discs **10** which are identical with the first five discs of each totaliser, and (on the left thereof in the drawing) two discs **10″** which carry conventional signs designating the personal totaliser and the kind of goods, respectively, which have been selected. The operation of these two discs is identical with that of the discs **10*d*** and **10*f*** of totaliser T now to be described.

The indicator totaliser T is shown on the left of indicator I and its function is to add the amounts of a plurality of successive operations of which the total is to be printed on a ticket. Like the indicator I, totaliser T does not give rise to a selection and it is actuated by a driving projection **60** fixed on member **17**. It comprises, from right to left in Fig. 9, five ordinary discs **10**, than a disc **10c** having only outer teeth, which disc **10c** is narrower in the radial direction than the other discs. On the left the disc **10c** are two discs **10*d*** and **10*f*** which differ from the ordinary discs in that their inner teeth are on a ring which is offset to the right by the thickness of one disc so that the inner teeth of disc **10*d*** are located within disc **10c**, whereas the inner teeth of disc **10*f*** are located within disc **10*d***.

The five discs **10** of totaliser T take part in the registration of all amounts to be added by said totaliser. The "thousands" disc **10c** is actuated only by transfers from its right hand neighbouring disc **10**, as is the case in each of the totalisers in the mechanism considered. The discs **10*d*** and **10*f*** which are directly actuated by the projection **60** are respectively intended to enter a conventional sign identifying the kind of goods sold, and another sign identifying the personal totaliser that took part in the operation. It will be noticed that in the course of the selecting operations the projection **60** will actuate the disc **10*f*** (which is the seventh from the right in Fig. 9) while the levers **28** have their projection **30** engaged in the seventh disc from the right in each totaliser (Fig. 4) and their heel **29** in register with the bosses **33** of the selectors **11**.

In Fig. 1, it is seen that on the left side of the totaliser T are three discs **10′** threaded on a sleeve **62**. These discs **10′** form together a general counter S which is actuated by transfers from the totaliser T. They count the total number of operations performed by the mechanism and the ordinal of each operation is printed on a ticket together with its amount by a suitable printing mechanism which does not form part of the present invention.

The operation of the mechanism now will be

described with reference to a numerical example. Let us suppose that a salesman A at the counter C of a store has sold goods for $208.50. The bar 17 having been returned at the end of the preceding operation to its extreme left position (Figs. 1 and 2), the salesman now allows it to escape step by step towards the right under the action of spring 25, each escapement step being equal to the thickness of a disc 10. The control mechanism of the axial and angular movements of bar 17 and shaft 12 forms no part ef the present invention and it may be of any suitable type, operated by keys or by a handle, for example of the type described in my co-pending patent application Serial No. 17.119.

After the first step to the right (Fig. 4), the projections 30 of levers 28 are in register with the discs 10a which have the longer inner teeth, while the heels 29 are in register with the bosses 33 or 52 of the selectors. The mechanism thus is ready for selecting the individual selectors. By means of the handle 49 of goods totaliser C, the salesman turns the ring 48 (Fig. 8) through one twentieth of a revolution and he thus brings a boss 52 over the heel 29 of lever 28 (It should be pointed out that this rotation could have taken place befere instead of after the first axial escapement of bar 17, in which case the escapement step would have brought the heel 29 under the boss 52). The lever 28 then tilts, compressing its spring 31 and its driving projection 30 juts out of bar 17 to a sufficient extent to engage between the inner teeth of disc 10a. Goods totaliser C thus is selected and simultaneously the rod 55 moves transfer part 54 to its preparatory position so that counter C′ may register one unit at the end of the operation. Immediately thereafter the salesman rotates clockwise shaft 12 through one tenth of a revolution, from the position shown in Fig. 3 to that shown in Fig. 5. The heel 29 of the lever 28 in the personal totaliser A stops exactly under a boss 33 and causes the projection 30 to rise as shown in Fig. 4. At this time the heel 29 of the lever 28 in the goods totaliser C is again under a boss 52 so that totaliser C is not affected and remains selected. During the rotation through one tenth of a revolution the projection 30 in totaliser A has moved with it the disc 10a owing to the long teeth of said disc. Together with disc 10a the ring 21a has also rotated through one tenth of a revolution and its cam 38 pushing on the finger 39 of member 40—43, has moved this member in its preparatory position for a transfer, so that the counter A′ will mark one unit at the end of the entry of an item.

The first escapement step of bar 17 has also resulted in bringing the driving projection 60 for totaliser T (Fig. 9) into engagement with the inner teeth on disc 10f which thus is caused to take part in the subsequent rotation through one tenth of a revolution. This disc prepares the subsequent impression on the ticket of the letter A carried by the first outer tooth on disc 10f, which letter identifies the personal totaliser that has been selected. Likewise, in indicator I, the driving projection 60 has engaged the first disc 10″ which also takes part in the subsequent rotation through one tenth of a revolution and causes the letter A to be displayed, thus showing that the personal totaliser A has been selected.

In the general totaliser G nothing has happened because there are no inner teeth i seventh disc (from the right) into whic driving projection 60 is engaged.

The second step to the right of the bar 1 trolled by the operator brings all the raise jections 30 within discs 10 (i. e. in each to the sixth disc from the right) so that said which have no inner teeth will not be driven the shaft 12 is rotated. In totaliser T and cator I, the projections 60 have come int gagement with the inner teeth on disc 10 on disc 10″ respectively. When the shaft rotated through a predetermined angle, a ventional sign, for example X, designatin kind of goods sold, is caused to appear o outer teeth of said discs. A transfer m (not shewn) prepares the carry-ever, at th of the operation of ene unit to the counte

It is also to be observed that during the s step of bar 17, the pin or finger 35 on ea the levers 28 has contacted with the lockir 34. The fingers 35 in the selected totalis and C are above the bar 34, while in totali and D which have not been selected the fing are below the bar 34, all the levers 28 thus locked in their respective positions until th of the operation being effected.

The third step of bar 17 brings the ope projections 30 and 60 into the fifth disc the right) of each totaliser, which is the dreds" disc. The operator then rotates the 12 with bar 17 through two tenths of a r tion, and in all the operative totalisers, nam A, C and T, as also in the indicator I, the dreds" disc is rotated through two tenths revolution, thus marking two hundred.

The fourth step brings the projections 3 60 into the "tens" discs but as the number entered has no tens, the operator does n tate the shaft 12, and he immediately mov 17 a fifth step to the right and then rotat shaft 12 through eight tenths of a revolut order to mark eight units.

The operation thus is continued until th tire number is entered. At the end of th eration the operator rotates, by means of a or otherwise, the shaft 45 with the arms 44 render effective all the transfers prepared in the counters as described above, or/and totalisers themselves, in a well-known m such as described for example in my afo patent application Serial No. 17,119. The o tor then moves the bar 17 to its starting treme left position, whereby the projections the levers 28 are again sunk into the reces by the respective springs 31, the pins 35 h come opposite the gaps in the bar 34 and h no more locking action on the levers. The anism thus is ready for a new selecting and tering operation.

The discs of the indicator I are zeroized each operation in any convenient manner, f ample as described in my said application No. 17,119. The discs of totalizer T may a zeroized, or they may add a plurality of am (as those of a customer's successive purch and then be zeroized after the total amour been printed. The zeroizing mechanism m of any known type, as that described in m application No. 17,119.

MARCEL DEMEULENAE

PUBLISHED

MAY 25, 1943.

BY A. P. C.

M. DEMEULENAERE
COMPUTING MECHANISM FOR CASH
REGISTER AND THE LIKE
Filed July 31, 1939

Serial No.
287,630

3 Sheets-Sheet 1

Fig. 1.

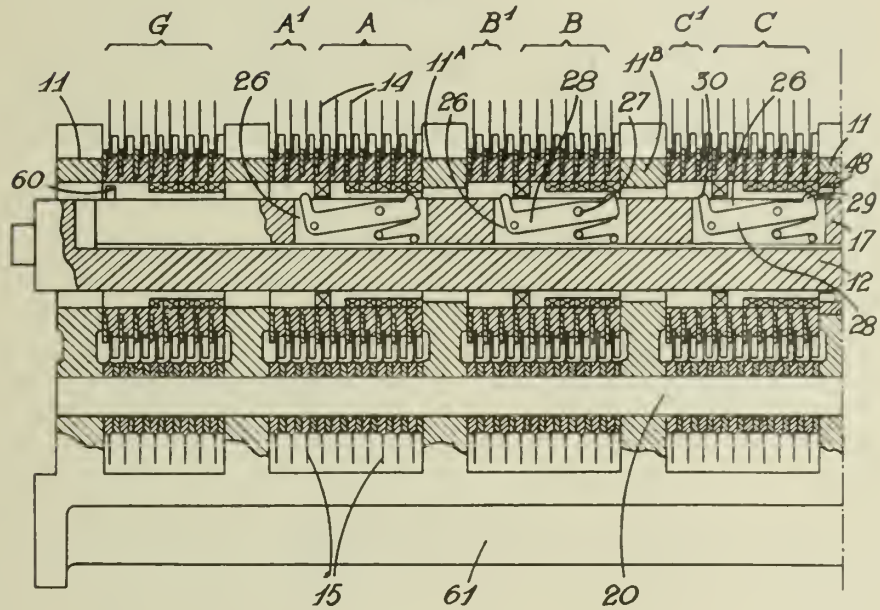

Fig. 1.a.

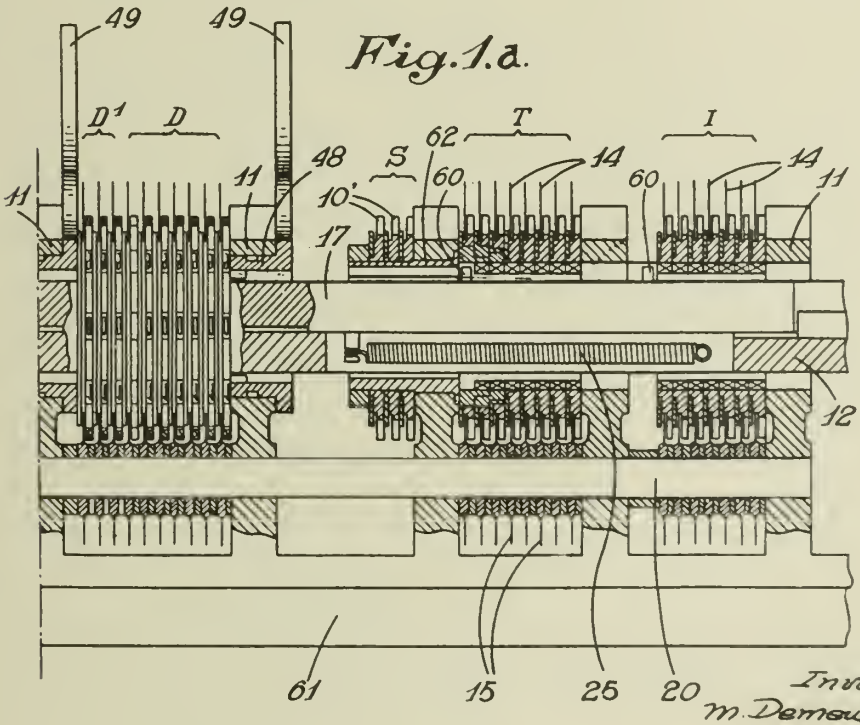

Inventor,
M. Demeulenaere

By: Glascock Downing & Seebold
Attys.

PUBLISHED

MAY 25, 1943.

BY A. P. C.

M. DEMEULENAERE
COMPUTING MECHANISM FOR CASH
REGISTER AND THE LIKE
Filed July 31, 1939

Serial No.
287,630

3 Sheets-Sheet 2

Fig. 2.

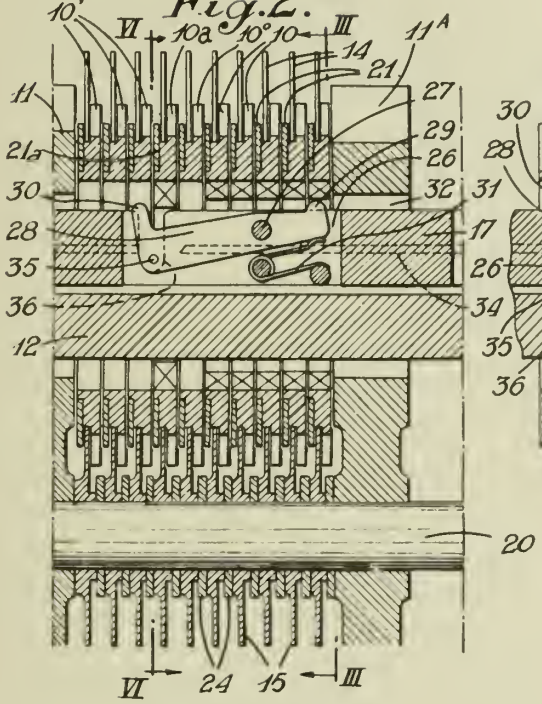

Fig. 4.

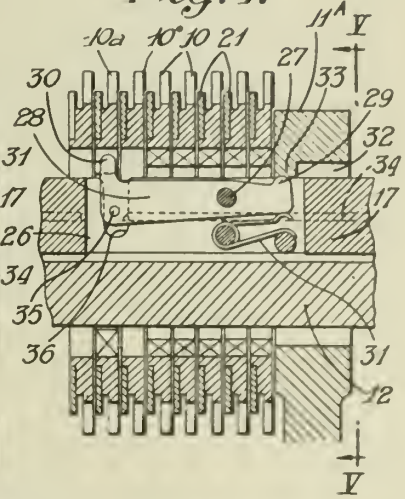

Fig. 3.

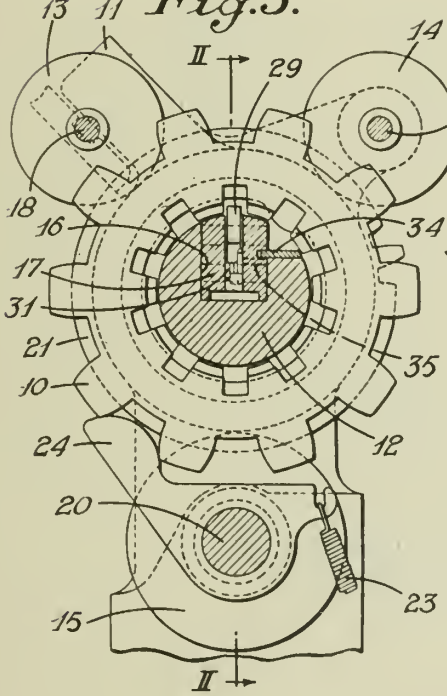

Fig. 5.

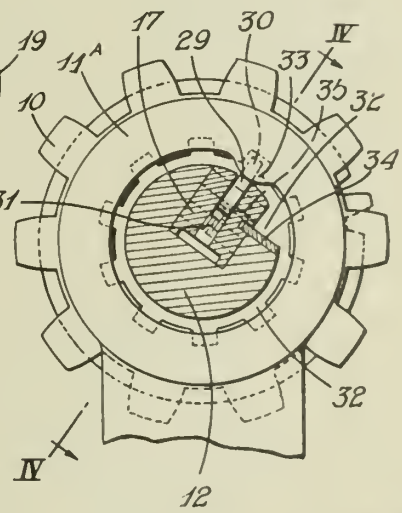

Inventor,
M. Demeulenaere

By: Glascock Downing & Seebold
Attys.

PUBLISHED

MAY 25, 1943.

BY A. P. C.

M. DEMEULENAERE
COMPUTING MECHANISM FOR CASH
REGISTER AND THE LIKE
Filed July 31, 1939

Serial No.
287,630

3 Sheets-Sheet 3

Fig. 6.

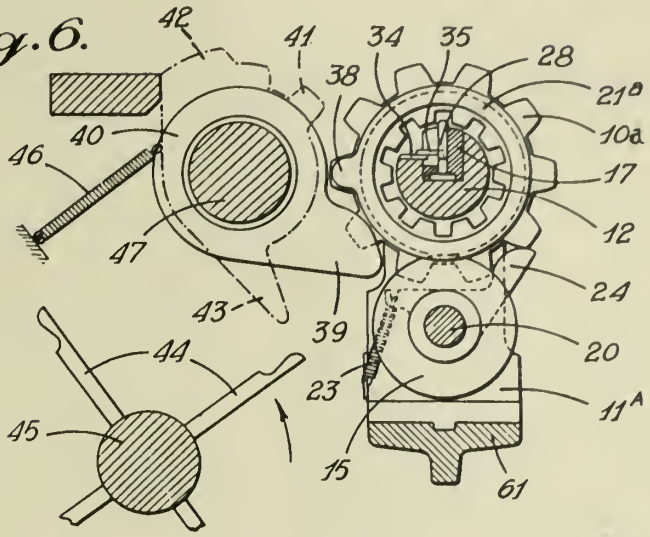

Fig. 8.

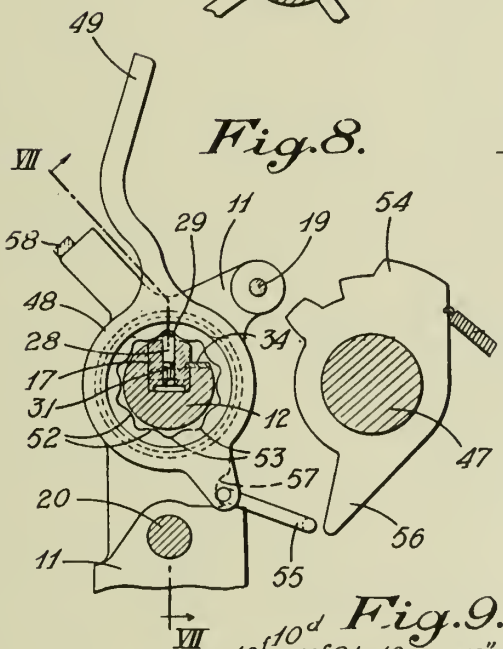

Fig. 7.

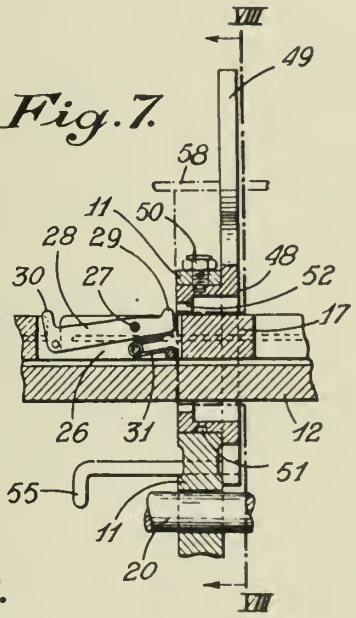

Fig. 9.

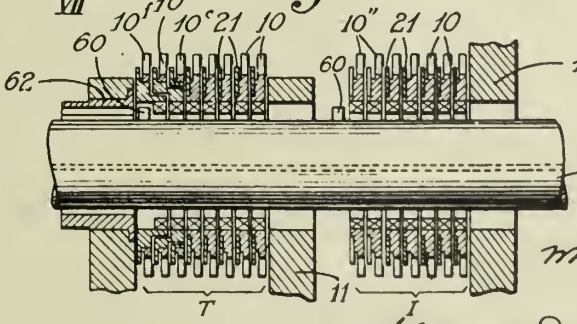

Inventor;
M. Demeulenaere
By: Glascock Downing & Seebold
Attys.

Published May 25, 1943

Serial No. 287,668

ALIEN PROPERTY CUSTODIAN

COUPLING DEVICE FOR TYPEWRITING CALCULATING MACHINES

Hugo Ernst Kämmel, Zella-Mehlis, Germany; vested in the Alien Property Custodian

Application filed July 31, 1939

The invention relates to a coupling device for typewriting calculating machines of the type exemplied in my co-pending application Ser. No. 725,636, filed May 14, 1934 and of which the present application is a division.

Such devices have previously been known.

They had however, the disadvantage that their whole construction was more or less complicated since for each of the calculating keys were provided a coupling mechanism for the control of the calculating or total taking process.

According to the invention these disadvantages are now obviated by providing a universal coupling device which is inserted between the calculating mechanisms, total taking mechanism respectively and the number typing keys, total taking keys respectively common to each numeral key, total key respectively and control the calculating operations, total taking operations respectively in the registration and withdrawal of values.

In the drawings, one example of construction of the subject of the invention is illustrated as applied to a Mercedes Addelektra typewriting calculating machine.

Fig. 1 shows a front elevation of the whole typewriting calculating machine.

Figure 2 shows a left-hand side elevation of the machine.

Figure 3 shows a front elevation towards the calculating members together with the calculating segment and a part of the change-over gear for the cross totalizers, in which view the number typing keys and the letter typing keys are represented in section.

Figure 4 shows a plan of the drive frame together with the calculating keys and the drive coupling.

Figure 5 shows a perspective illustration viewed from the front left-hand side of the machine, of the drive coupling with the setting member, common to all the calculating keys, for the coupling, in which view the individual parts for the sake of better insight are represented drawn out from one another.

Figure 6 shows in perspective, details of the setting member, the parts of which are likewise drawn out from one another.

Figure 7 shows a perspective illustration of the transmission and control mechanisms arranged between the typing and calculating keys, viewed from the front left-hand side of the machine, together with the change-over gear for the column totalizers and a part of the change-over gear for the cross totalizers, in which view the individual parts are illustrated drawn out from one another.

Figure 8 shows a perspective illustration of the total taking mechanism for the column totalizers viewed from the front left-hand side of the machine, together with a part of the change-over gear for the column totalizers and the printing mechanism for the sign for taking totals from the column totalizers, in which view the parts are illustrated partially drawn out from one another.

Figure 9 shows a perspective illustration of the total taking mechanism for the cross totalizers, with the printing mechanism for the sign in addition thereto and a part of the change-over gear including both the driving wheels for the cross totalizers, the view being taken from the front left-hand side of the machine and various parts being illustrated drawn out from one another.

Figure 10 shows in perspective the unlocking mechanisms for the column and cross totalizers, viewed from the front left hand side of the machine.

Figure 11 shows a perspective arrangement of a totalizer viewed from the rear, in which view the detail parts are illustrated in a condition separated from one another.

Figure 12 shows a perspective illustration of a locking lever with locking flap, viewed from the left-hand edge of the rear side of the totalizer.

Figure 13 shows a sectien according to the line *a—a* of Figure 11.

Fig. 14 shows a section according to the line *b—b* of Figure 11.

Figure 15 shows a partially illustrated sheet, filled in with an example of calculation with is to find application later in the explanation of the manner of operation.

Figure 16 shows in the form of a table the shift procedure of the kind of calculation for the cross totalizers according to the example of calculation illustrated in Figure 15.

Figure 17 is an operation time diagram.

The machine housing 1 (Figures 1 and 2) carries by means of rails 2 and 3 the paper carriage 4, in which a platen 5 (Figure 2) is arranged. To the front side of the paper carriage, there is fixed a supporting rail 7, for carrying the column totalizers T, which will be hereinafter described in detail.

To the right-hand side of the paper carriage 4, the carriage release lever 8 (Figure 2) is swingably mounted, and to an extension of this lever a carriage release bar 9, is fixed. This bar is rigidly connected at its other side with a lever 10, which is swingably mounted on the left hand side of the paper carriage, on a screw 11.

The carriage release lever **8**, release bar **9** and lever **10** form part of mechanism for releasing the usual carriage escapement in the usual manner which mechanisms being well known in the art have not been illustrated in detail and need not be further described.

For the purpose of the mechanical line-shift and for the return of the paper carriage there is, further, on the carriage **4**, a rack **12** (Figures 1 and 2) which is displaceably mounted by screws **12*b*** engaging with the slots **12*a***. With the rack **12**, engages a toothed wheel **13**, which is pinned on a shaft **14**. This shaft is mounted in a stationary bearing **15**, and carries a rigidly mounted bevel wheel **16** on its end, remote from the toothed wheel **13**. With the bevel wheel **16**, engages a bevel wheel **17** (Figure 1) which is fixed on a shaft **18**. The shaft **18** is rotatably mounted in a bearing **19**, rigidly connected to the machine frame, and on its other end is provided with a spur wheel **20**, which on its part, engages with a spur wheel **21**, which is rotatably mounted on a shaft **23**, arranged in the bearing **22**. The spur wheel **21**, again, is in engagement with the spur wheel **25**, which is rotatably mounted on the shaft **24**, the spur wheel **25**, on its part meshing with a spur wheel **26**, formed as part of a coupling **26*a***. The wheel **26**, is loosely rotatable and axially displaceable on a part **27** (Figure 1) of a cam shaft C (Figure 2) which drives the type levers. On the part **27**, further, a second coupling half **27*a*** is fixed which is formed similarly *x* to the spur wheel **28**, but is not axially displaceable. The shaft **27** is rotated in the direction of the arrow "*a*" (Figure 2) by means of a screw **29** (Figures 1 and 2), and a worm wheel **30**, driven by a motor M which is arranged on the right-hand side of the machine.

The line shift and the carriage return is effected by bringing the coupling half **26*a*** into engagement with the coupling half **27**a, by means of a lever **31**, which is operated by the right-hand margin stop M*r*, (Figure 1). Such engagement of said halves and operation of said lever **31** operates the hereinbefore described wheel drive **13** to **26**, and the rack **12**, to effect line spacing of the platen **5** and the return of the carriage to the right in a manner and by associated means fully described in U. S. Patent Nr. 1,582,788 to which attention is directed. The opening of the coupling **26**, **28** is effected by the left-hand margin stop M*l*, as the paper carriage **4** runs into its extreme right-hand position to uncouple said halves **26*a*** and **27*a***.

The typewriter mechanism proper comprises letter keys **32**, number keys **33** and calculating keys **34** (Figs. 1, 2, 7) mounted upon key levers **36**, **35** and **82**, respectively, movable downwardly around pivot **37** against the action of springs **38**. The calculating keys **34** act indirectly on the number key levers **35** in a manner and by means hereinafter described on pages 30 and 31 beginning with line 26 of the former and ending in line 4 of the latter, also on page 36 lines 4 to 26 and page 37 lines 22 to 28. In their normal positions the key levers **36**, **35**, **82** rest against a stop **39** (Fig. 2). By means of a pin, **40**, a driving pawl **41**, is mounted on each key levers, **35**, **36** and this pawl is so acted upon by the tension spring **42**, that its lug, **43** rests against a nose **44**, of a key lever, **35**, **36**. The nose **45**, of the driving pawl, **41**, engages over a nose **46**, of the draw hook **49**, jointed to the intermediate lever **47**, by a pin **48**, and the draw-hook is acted upon continually round its pin **48** in the anti-clockwise direction by means of a tension spring, **50**, and p upwards against a stop **51**, whereby its n position is determined.

On the draw-hook **49**, the control tooth provided with two teeth **49*a*** and **49*b***, is rot mounted on the pin **49*d***. If one of the t keys **35** or **36** is depressed, the associated c tooth **49*c*** moves into engagement with th shaft as described in the patent to Schul 1,789,661 dated Jan. 20, 1931. The control **49*c*** is first of all rotated slightly and then the draw-hook **49** along with it to the rig that the intermediate lever **47** is swung rou shaft **52**, in the clockwise direction. Acco ly, the type lever **54**, is swung in the anti-wise direction round the shaft **55**, and s against the platen **5**.

The spur wheel **28** (Figures 1 and 2) wh non-rotatably mounted on the shaft **27** (Fig engages with a spur wheel **56**, which is mounted on the shaft **57**. The spur wh again is in engagement with the spur wh rigidly mounted on the shaft **58** (Figures 4, 5).

The above described mechanisms do not to the invention but have been briefly des for the better understanding of the parts hereinafter described, belonging to the inve

The calculating mechanism drive shaft **58** ures 2, 4 and 5), on one hand, is rotatably m ed in the bearing eye **60**, arranged in the hand side of the machine housing **1**, and other hand, the part **58*a*** of the shaft **58**, is ably mounted in a bearing **61**, which is fi means of the screws **62**, to a bridge **63** conn the two side walls, **64** and **65**. Another sh (Figures 2, 4, 5, 7, 8 and 9) is rigidly moun means of set screws **67**, screwed into bos (Figure 4) on the left and right hand side w and **65** of the machine housing **1**, and o shaft, members to be hereinafter describe swingably mounted.

In the bearing eye **61** (Figures 2 and 5), **69**, (Figures 2, 4, 5) is rotatably mount means of the sleeve, **69*a***, rigidly fixed to th The cam **69**, is rigidly connected to the ca and **72**, by means of screws (not illust which pass through holes **70**, of the cams. shaft, **58**, however, remains without any on the cams, since the cams **69**, **71** and **72**, as the sleeve, **69*a***, have greater bores "*y*" than the diameter of the shaft, **58**. The **69**, **71** and **72** are prevented from latera placement, on the one hand, by contact side **69*b***, of the cam **69**, with the edge the bearing eye, **61** and, on the other ha contact of the cam, **72**, with the toothed **73**, non-rotatably mounted on the square **58**. The toothed wheel, **73**, participates rotation of the square shaft, **58**, which co ally rotates in the arrow direction "*b*" (F On the cam **72**, a pawl, **74** (Figures 4 and displaceably arranged by means of pins, **78**, which engage in elongated slots **75** of th **72**, in elongated slots **76**, of the cam **71**, elongated slots (not illustrated) in the ca The pawl **74**, is acted on continually in the tion of the arrow "*c*" (Figure 5) by a con sion spring **79**, which, on the one hand, against the pin **78**, fixed to the pawl **74**, a the other hand, abuts against the face **72*a***, slot **75**, in the cam **72**. Moreover, a st formed on the pawl **74**, co-acts with a part, hereinafter described in detail, by means of the tooth **74*a***, of the pawl **74**, is held out

gagement with the toothed wheel 73. In ring grooves (not illustrated) in the ends of the pins, 77 and 78 of the pawl 74, which project from the left-hand side of the cam 69, a locking member 81, is fixed, in the manner illustrated in Figure 5, so that the pawl 74, always remains in connection with the cams 69, 71 and 72 and the pawl 74 is prevented from falling out. It may be remarked at this point that for the whole ten calculating keys 34, only one coupling as just described, is necessary.

The ten calculating key levers 82 (Figures 1, 2, 4, 5 and 7) which carry the calculating keys 34, are swingably mounted on the shaft 68, already mentioned. The rearwardly directed limbs of the calculating key levers 82, are somewhat upwardly bent at their ends, and have arched surfaces 82*a* (Figures 2, 7) of the downwardly directed projections 84, of the U-shaped stop members 85. The latter are swingably mounted on a shaft 87 (Figures 2, 3 and 7) rotatably mounted by means of two set screws 86 (Figures 3 and 7). Each of the set screws, 86, is screwed into a corresponding angle member 86*a* (Figure 3), the angle members being fixed by means of screws 86*b* to both side members 66*c* of the cradle housing. The stop members, 85, moreover, are held in position in the axial direction by means of distance pieces 85*b* (Figure 3), arranged on the shaft 87.

On the left-hand limbs of the stop members 85, which correspond to the values "1" *and* "9", and on the right-hand limbs of the stop members 85 (Figure 3) which correspond to the values "2" to "8", projections 88 (Figures 2, 3 and 7) are arranged with which engage springs 89, the springs on the other hand being connected to pins 90 (Figure 2). The pins 90, are riveted into angle members 91 (Figure 2) which, again are screwed by means of screws 91*a*, to a bar 92 (Figures 2 and 7) attached to the two side walls of the machine frame in any suitable manner. By means of these springs, 89, the stop pieces 85, are acted on in the clockwise direction round the shaft 87, so that they rest with their faces 85*a*, (Figure 2) against the bar 92, whereby the normal position of these stop members 85, is determined. Since the calculating key levers, 82, are acted upon by their own weight in the clockwise direction round their pivot shaft 68, and consequently rest with their arched faces 82*a*, against the arched faces 83, of the stop members, so the normal position of the calculating key levers 82, is hereby determined. A depression simultaneously of two calculating keys 34, or of a calculating key 34 and a decimal tabulator key 93 (Figure 1) is rendered impossible by a generally known roller key lock of the Mercedes Addelektra machine, not illustrated.

On each calculating key lever 82, a pawl, 95 is swingably mounted by means of a rivet 94 (Figures 2, 5 and 7). With the nose 95*a* of this pawl a spring 96, engages which, on the other hand, is connected to a nose 82*g*, arranged on the key lever 82. By means of this spring 96, the pawl 95, is acted on in the anti-clockwise direction round its rivet 94. The normal position of the pawl 95, is determined by the contact of the right-angled bent nose 95*b*, on the upper edge of the key lever 82. The downwardly directed end 95*d* of the pawl 95, is capable of co-acting with the right-angled upwardly-bent nose 97, of a bar 98. On the right and left hand ends of the bar 98, pins 98*a* (Figures 5 and 6) are formed, one pin being arranged at each end. By means of these pins, the bar 98, is swingably mounted on the levers 100 and 101, rigidly mounted on both ends of the shaft 99. The shaft, 99, at its right hand side, is rotatably mounted by means of a set screw 102 (Figure 5) in a bearing member 103, which is fixed to a bar 105, by means of screw 104. On the left-hand side of the machine, the shaft 99, is rotatably mounted by means of a cone bearing 106 (Figure 6) in a bearing member 107, which is fixed with screws 108, to the bar 105, already mentioned. The bar 105 is fixed to both side walls 64 and 65 of the machine housing 1, by means of screws 105*a* (Figure 4) which pass through holes 105*a* and 105*b* (Figures 5 and 6) of the bar 105.

By means of a spring 109, which, on the one hand, engages with a lug 98*b* of the bar 98, and, on the other hand, is connected to a pin 99*a* (Figure 2) rigidly fixed to the shaft 99, the bar 98, is acted on in the anti-clockwise direction round its pins 98*a*, so that its upper surface presses upwards against a bent lug 103*a* on the bearing block 103, whereby the normal position of the bar 98, is determined.

A locking bar 110 (Figures 2, 5 and 6) is swingably mounted at both its ends on the shaft 99, in the manner indicated in Figures 5 and 6. At the right-hand and left-hand ends of the locking bar 110, further pins 110*a* are fixed, with each of which a spring, 110*b* (in Figure 5 this has not been illustrated for the purpose of rendering other parts visible), engages, which spring on the other hand, is connected to bent lugs 100*a* or 101*a* of the levers 100 and 101. By means of these springs 110*b* the locking bar is always acted upon round the shaft 99 in the clockwise direction, whereby its normal position is determined, on the one hand, by contact with the pin 100*b*, riveted to the lever 100 and, on the other hand, by contact with the pin 101*b* riveted to the lever 101. The right-angled limb 110*g*, is capable of co-acting with the noses, 82*h* (Figure 5) formed on the calculating key levers 82, in a manner to be hereinafter described.

On the shaft 99 (Figures 2, 5, 6) further, a lever 111 is rigidly mounted to the free end of which a pin 112 is riveted (in Figure 5 for the sake of illustration the same is indicated in the withdrawn position). The pin 112 of the lever 111, co-acts with the fork-shaped end of an arm 113, of a three-armed lever 114, which is swingably mounted on the shaft 68. The arm 114*a* of the three-armed lever 114, co-acts with the stud 80, already mentioned, of the pawl 74, while the arm 114*b*, of the same, co-acts with the cam 72, in a manner hereinafter described. A spring 115 engages with a pin 114*f* (in Figure 5, the pin 114*f* is shown removed from the lever 114 for purposes of illustration) riveted to the nose 114*d* (Figure 5), the spring at its other end being connected to a pin 115*a* (Figure 4) on a stay 115*b*, which is fixed to the part 63 and to the cross stay 105. By means of this spring, the three-armed lever 114, is acted on in the clockwise direction round the shaft 68, in consequence of which the lever 111 connected to it, the shaft 99, and the levers 100 and 101 pinned to it, the locking flap 110, and finally the bar 98, are acted upon in the anti-clockwise direction, whereby on the one hand, the upper face of the lug 98*r*, under the action of the spring 109, and on the other hand, its edge, 98*s* under the action of the spring 115, contacts with the edge 103*g* of the lug 103*a* of the bearing member 103, whereby

the normal position of the parts **114**, **111**, **99**, **100**, **101**, **110** and **93**, is determined.

Further, on the shaft **68**, a lever **116**, (Figures 2, 5) is swingably mounted, at the free end of which a roller **117** is arranged, which is capable of co-acting with the cam **69**. By means of the spring **119**, which, on the one hand, engages with the pin, **118** of the lever **116**, and on the other hand, is connected to the part **63**, the roller **117**, is always maintained in contact with the cam **69**.

The lever **120**, which similarly is swingably mounted on the shaft **68**, is likewise capable of co-acting by means of its rearwardly directed arm **120***a* (Figure 5) with the cam **69**. By means of the spring **123** which, on the one hand, engages with the pin **121**, and, on the other hand, is connected to a pin **122** (Figure 2) of the bridge **105**, the lever **120**, is acted on in the clockwise direction round the shaft **68**, whereby the projection **120***b* of this lever contacts with a part **120***c*, fixed to the locking bar **110**, and the normal position of the lever is thereby determined.

By means of the set screws **127**, screwed into the two side walls **125** (Figure 3) of the calculating mechanism **126** (Figures 1, 2, 3 and 7) a shaft **128** is freely rotatable. To this shaft, **128**, feeler fingers **129**, are mounted so as to be capable of being adjusted and fixed in position, and these fingers are forwardly bent at right angles at their downwardly-directed ends and are capable of co-acting by means of their slightly arched faces **130**, with the stop pins **131**, (as best shown in Figure 7) arranged on the stop members **85**. The stop pins **131**, are mounted so as to be adjustable. The right-angled forwardly-bent parts of the feeler fingers **129**, are formed of different lengths (Figure 2) to correspond to the values "1" to "9", and the right-angled bent part, corresponding to the value "1" of the feeler finger **129**, lying farthest to the left (Figure 3) is the longest, and the right-angled bent part corresponding to the value "9" of the feeler finger **129**, which is located on the shaft **128** at the right hand side of the machine to the left of the feeler finger **129** corresponding to the value "0" is the shortest.

The feeler finger **129**, corresponding to the value "0" is arranged so as to be capable of being fixed by means of screws **129***b* (Figures 3 and 7) to a part, hereinafter described in detail, fixed to the projection **129***c* of a clamping member **129***d*. As the feeler finger **129**, corresponding to the value "0" may not be allowed to execute any swinging movement, calculating sector **174** would be swung therewith and in this manner a wrong value would be registered in one of the right angled bent part of the feeler finger **129** corresponding to the value "0" is still longer than the right-angled bent part of the feeler finger **129**, corresponding to the value "1".

A roller lever **132**, is loosely rotatable on a shaft **27** (Figures 5 and 7) and on the free forwardly directed end of this lever, a roller **133**, is mounted, which is capable of co-acting with the cam, **69**, hereinbefore described. To the roller lever **132**, is jointed a draw-bar **134** which, at its upwardly directed free end, is jointed by means of a screw **135** (Figures 2, 3 and 7) to the lever **137**, which is loosely rotatable on the locking shaft **142**. By means of a spring **141**, which on the one hand, engages with the pin **138**, rigidly mounted on the draw-bar and, on the other hand, is connected to a pin **140**, rigidly mounted on the front wall **139** (Figures 2 and 5) of the calculating mechanism **126**, the draw-bar acted upon always in the direction of the "*a*" (Figures 5 and 7), so that the roller always maintained in contact with the car

The locking shaft **142**, is arranged so a loosely rotatable by means of set screw illustrated) on the two side walls **125** of t culating mechanism **126**. To the lever pin **143**, is fixed, which projects through a gated hole **144**, of a lever **136**, rigidly m on the locking shaft **142**. A spring **145**, e with the pin **143**, of the lever **137**, the oth end of the spring being connected to a p fixed to the lever **136**, whereby both lev and **137** are yieldingly connected to one a

To the lever **136**, a connecting member jointed by means of a screw **147**, and this ber is jointed to an angle lever **150** (Fig and 7) by means of a screw **149**. The lev again, is swingably mounted by means of a **151**, on an angle member **152**, which is fi means of screws **153** (Figure 1) to the fro **154**. To the angle lever **150** (Fig. 7) is fixe **155**, which projects into a ring groove **15** sleeve **157** and this sleeve is arranged so a axially displaceable on a shaft **158**, mou any suitable manner in the two side walls the calculating mechanism **126**. With the **157**, a wheel **159**, likewise mounted so a axially displaceable on the shaft **158**, is i connection. Pins **160** (Figure 3) are arran the toothed wheel **159**, and these pins are in engagement with a claw **161** (Figs. 3 rigidly mounted on the shaft **158**. Furt the shaft **158**, is arranged a toothed whe the pins **163** of which are likewise in enga with the claw **161** (Figs. 3, 7, 9). The t wheel **162**, is rigidly connected to a ring g sleeve **164** (Figure 3) which is arranged s be axially displaceable on the shaft **158**.

On the shaft **87**, (Figures 3, 5 and 7) t rigidly mounted a lever **165**, on the free wardly projecting end (Figure 5) of w roller **166**, is arranged, and this roller is of co-acting with the cam **71**, hereinbef scribed. The lever, **165** is, moreover, fixed shaft **87**, in such a manner that its roller normally in contact with the cam **71**.

Besides, on the shaft **87** (Figures 3, 5, 7 ver **167**, is arranged, so as to be loosely ro thereon. To the lever **167** a roller **168**, tached, so as to be rotatable, and this r capable of co-acting with the cam **72**, he fore described, in a manner to be hereina scribed in detail. To the lever **167**, a slide jointed by means of a headed screw, means of a spring **171**, which, on one h connected to a pin **172**, arranged on the s and, on the other hand, engages with a (Figure 3), arranged on the front side calculating mechanism, the slide **170**, is acted upon downwards in the arrow directi whereby the roller **168** of the lever **167**, is held in contact with the cam **72**. The s is provided with an elongated hole **173***x*, correspondingly to that in Figure 7, into hole projects a roller **175**, mounted on t culating sector **174**. The calculating sec is arranged so as to be capable of adjustme of being fixed in position on the shaft means of a screw **176***a*. The upwardly d part of the calculating sector **174**, is p with teeth **177**, with which the main drivin **159**, hereinbefore described, is capable o moved into engagement.

The toothed sector 174 (Figures 2, 3, 7) which is actuated on striking a calculating key 34, in a manner to be hereinafter described, transmits the swinging movement corresponding to the value of the struck key, by way of the toothed wheel 159, and shaft 158, to a locking wheel 178 (Figure 7) rigidly mounted on the shaft 158, which locking wheel is always in engagement with a guide and locking tooth 179. Further, on the shaft 158, a toothed wheel 180 is mounted so as to be capable of axial displacement. This is normally in engagement with a toothed wheel 181, which is integrally formed with a hollow shaft 182, and a toothed wheel 183. The unit 181, 182 and 183 is rotatably mounted on a shaft 184, fixed in the left-hand wall 125 (Figure 3) of the calculating mechanism. The toothed wheel, 183, again, is in engagement with a toothed wheel 185, which is rigidly mounted on a shaft 186. The shaft 186, is rotatably mounted in the left-hand side wall 125 of the calculating mechanism and in a bearing member (not illustrated) arranged approximately at the centre.

Beside the toothed wheel 185, there is a further toothed wheel 187, mounted so as to be non-rotatable on the shaft 186. Further, on the shaft 186, a master wheel 189 (Figure 7) is rigidly mounted, which comes into engagement with the toothed wheels 188 (Figure 2) of the column totalizers T, in the working position.

On the wheel 180, a ring grooved sleeve 190 is rigidly mounted, into which projects a pin 191, of a lever 193, rigidly mounted on the shaft 192, which is rotatably mounted in the calculating mechanism. The driving of the toothed wheel 180 (Figures 7 and 8) on a rotational movement of the shaft 158, is effected by a coupling disc 180*a*, pinned to the shaft 158, into which disc engage claws 180*b*, rigidly connected with the toothed wheel 180.

On the shaft 87 (Figures 2 and 7) there is rigidly mounted a lever 194, to the free upwardly directed end of which, a draw-bar 196, is jointed by means of the screw 195. A nose 197, of the draw-bar 196, engages over a nose 198, of a lever 199, rigidly mounted on the shaft 142. By means of a spring 200, which engages with the draw-bar 196, and which on the other hand is connected in the calculating mechanism in any suitable manner, the lever 196, is normally swung about the screw 195, in the anti-clockwise direction, whereby, the lever 196, is normally positioned so that its nose 197, always remains in engagement with the nose 198, of the lever 199. The lever 196 rests against a pin 201, arranged in any suitable manner in the calculating mechanism.

On the shaft 142 (Figures 3 and 7) there is fixed a release finger 202 which is capable of acting on a locking lever 461, arranged in the totalizers T1 to T8 in a manner to be hereinafter described. Further on the shaft 142, there is a locking tooth 203, rigidly mounted, which is capable of co-acting with the main driving wheel 189, rigidly mounted on the shaft 186.

On the clamp 129*d* (Figures 3 and 7), as already hereinbefore described, a member 204, is also mounted by means of screws 129*b*, and to the free downwardly projecting part of the member 204, which is somewhat bent at the rear, a member 206 is jointed by means of a screw 205. On the left-hand side of the machine, a clamp 208, is arranged, so as to be capable of adjustment and to be clamped in position by means of a screw 207. To the projection 209 of the clamp 208, a part 211, correspondingly formed to that in Figure 7 is fixed by means of screws 210, and to the free downwardly projecting end of the part 211, there is attached a part 213, by means of a screw 212. A bar 216, correspondingly formed to that in Figure 7, is fixed to the part 213, by means of screws 214, and to the part 206, located at the right hand side of the machine by means of screws 215, so that a frame consisting of the parts 208, 211, 213, 216, 206, 204 and 129*d*, is formed.

The part 206 (Figure 7) located on the right-hand side of the machine, moreover, is guided by means of a headed screw 217, which projects through an elongated slot 218, of a lever 219, rigidly mounted on the shaft 87, and the part 213, arranged on the left hand side of the machine of the frame, is guided by means of a headed screw 220, which projects through an elongated solt 221, of a lever 222, rigidly mounted on the shaft 87, so that the frame 213, 216, 206, is prevented from swinging downwardly round the screws 212 and 205. With the arm 223 of the lever 222, and with the arm 224 of the lever 219, engage springs, 225, one spring with each arm, which springs are connected at their free ends in any suitable manner in the machine housing and these springs act upon the levers 222 and 219, and consequently upon the frame 213, 216, 206 in the clockwise direction. The swinging movement in the clockwise direction, however, is normally prevented by the draw-bar 196, the nose 197 of which engages over the nose 18 of the lever 199. The bar 216 of the frame 213, 216, 206, in a manner to be described later, is capable of co-acting with the noses 35*g* formed on the downwardly and forwardly extending number key levers 35 (Figure 2). Moreover the noses 35*g* are arranged on horizontal parts 35*h* of different lengths of the number key levers 35, the lengths of these parts corresponding to their values "0" to "9", and the horizontal part 35*h* corresponding to the value "0" (Figure 2) is formed as the shortest and the horizontal part corresponding to the value "9" as the longest.

On the left-hand side of the machine is arranged the total key 226*a'* indicated by TV (Figure 8) for taking the total of the column totalizers T. The key 226*a'* is attached to the key lever 226 (Figure 8), which is swingably mounted on the shaft 68. On the key lever 226 there is no pawl 95, mounted, as in the case of the calculating key levers 82 (Figure 7) in which the downwardly directed part of the pawl acts on the bar 97, but the key lever 226 (Figure 8) is provided with a wide projection 226*a*, which is capable of acting on the bar 97, 98 in the manner to be later described. The nose 226*b* of the key lever 226 is capable of co-acting with the nose 110*g* of the part 110. The rearwardly and somewhat upwardly projecting arm 226*d* of the key lever 226, is capable of acting with its somewhat arched face 226*c* on the somewhat arched face 227 of an arm 228 of a two-armed lever 229. The two-armed lever 229 is swingably mounted by means of a headed screw 230 on a supporting member 232, which is mounted by means of screws 231, in suitable manner on the machine housing. To the free rearwardly directed arm 233, of the two-armed lever 229, a draw-bar 235, formed correspondingly to that in Figure 8, is jointed by means of a screw 234, which draw-bar is provided with an elongated hole 236, in its free upwardly directed end. Through this hole a screw 237 projects, which is screwed into a lever 238, fixed on the shaft 192, whereby the draw-bar 235 is held loosely in connection with the lever 238.

The draw-bar **235**, is connected, in the manner illustrated in Figure 8, with a three-armed lever **239**, which is swingably mounted in a suitable manner at **239***x* on the rear wall of the calculating mechanism **126**. With the arm **239***a* of the three-armed lever **239**, a spring **240** engages, which at its other free end is connected to a pin mounted in the calculating mechanism, but not illustrated. In consequence of the action of the spring **240**, the draw-bar **235** is acted on in the direction of the arrow "*b*", whereby its normal position is determined by striking of the key lever **226** against a stop **226***s* arranged on the machine housing.

On the shaft **192** (Figure 8) mounted in the front wall **154** (Fig. 2) and in the back wall (not illustrated) of the calculating mechanism **126**, the swingable lever **193**, (Figure 8) already described, is rigidly mounted, and is rigidly connected by means of a sleeve **242**, with the lever **243**, which is likewise swingable with the shaft **192**. The lever **243**, again is connected by means of a pin **244**, with the lever **245**, which is swingably mounted on the shaft **192**. The pin **244** is embraced by a fork-shaped end of a control lever **246** (Figure 8). With the pin **244**, a spring **248** engages, which is connected to the pin **247**, mounted on the control lever **246**, whereby the control lever **246** is acted on towards the left and the levers **245**, **243**, towards the right, so that the same are always held in contact with the control lever **246**.

On the supporting rail **7** (Figures 1 and 2) of the paper carriage **4**, has already stated, the column totalizers T are removably mounted. On the column totalizers T, pre-setting plates **301** (Figures 1 and 9) are mounted by means of which the control of the type of calculation of the associated column totalizer located in the working position is effected for addition or subtraction. The pre-setting plate **301** of one of the column totalizers T (Fig. 1) which is directly in the working position, moreover, acts on a part **302** (Fig. 9) of an angle lever **303**, which is mounted, by means of a screw **304**, on the front wall **154**, of the calculating mechanism **126**. By means of a spring **307**, which engages with the lever **303**, and is connected to a pin **306**, fixed in the front wall **154** of the calculating mechanism **126**, the parts **303** and **298**, are held in their normal position, the normal position being determined by striking on a pin **308**, arranged in the front wall **154** of the calculating mechanism. The lever **303** is of fork-shape at its lower end and embraces with the same a pin **309**, of a control lever **311**, swingably mounted, by means of a screw (not illustrated) on the front wall **154** of the calculating mechanism **126**. While the pin **309** is capable of co-acting with the V-shaped recess **312** of the control lever **298**, the pin **313** fixed to the control lever **311**, co-acts with the upwardly directed V-shaped recess **298***a*, but the pin **313**, on its part is in no way connected with the angle lever **303**.

On the front wall **154** of the calculating mechanism **126**, is arranged a knob **315** (Figure 1) which is capable of being set on "Add.", "Subtr." or "Disc." corresponding respectively with Addition, Subtraction and Disconnected and this knob is rigidly connect to the lever **316** at **315***a* (Figure 8). On the control member, **316**, pins **317**, **318** (Figure 8) are arranged, which co-act with the control lever **246** in detail.

Further on the shaft **300** (Figure 9) there is mounted a lever **320**, which is rigidly connected to the lever **299**, by means of a sleeve **321** (Figure 9). A pin **322**, arranged on the lever **32** gages in a ring groove **164***a* (Figure 3) sleeve **164**, rigidly mounted on the toothed **162**.

The toothed wheel **162** may be brought gagement with a corresponding change-ge illustrated to determine the kind of calcu of the cross totalizers Q1 and Q2.

On the right-hand side of the machin key **329**, for taking totals of the cross tot Q1 and Q2, is arranged. The key **329**, is att to the key lever **330** (Figure 9) swingably m ed on the shaft **68**, the key lever being spondingly formed to that in Figure 8. Th **330***a*, of the key lever **330**, is capable, in a ner to be later described, of co-acting wi nose **110***g* of the member **110**, and the proj **330***b* of the key lever **330** is capable of co with the bar **98**. The rearwardly directe of the key lever **330**, is somewhat arched on its upwardly directed edge. This arche **331**, is capable of co-acting with an arche **332**, of a slide **337**, vertically displaceable by of the screw-slot connection **333**, **334** an **336**, arranged in suitable manner on the hand side of the machine and the front the housing. With the projection **337***a*, e a spring **338**, which, on the other hand, i nected at its free end to a pin **339** (Figu To the upwardly-directed end, formed spondingly to that in Figure 9, of the r there is riveted a pin **340**, which project a curved slot **341** of a slide **342**. The sli is displaceably mounted by means of screw which pass through the elongated holes the slide **342**. The left hand end of the sli is of fork-shape construction. With this shaped part, there engages the pin **346** of **345**, rigidly mounted on the shaft **300**. A lever **347**, which is rigidly mounted on the **300**, has likewise a pin (not illustrated) w capable of projecting into the ring groove (Figure 3) already referred to, of the slee

On the slide **342** (Figure 9) there is a off lug **348** (Figure 9) which is capable of positioned so that the face **349** of its nos lies in front of the face **351** of a locki aligning tooth **352**. On the shaft **353** whi the one hand is rotatably mounted in the hand side wall **125** of the calculating mech and, on the other hand, in a bearing m (not illustrated) suitably mounted in th chine housing, a lever **354** (Figures 9 an is rigidly mounted. The locking and al tooth **352**, as is evident from Figure 9, is shaped at its forwardly directed end a fork-shaped part embraces a sleeve **363***a*, rotatable on the shaft **323**, whereby the l and aligning tooth **352** is guided at one ends. At its other end, it is guided by me a screw, **355**, fixed to the lever **354**, and the projects through an elongated hole (not trated) in the locking or aligning toot By means of a spring **356**, which, on th hand, engages with a pin **357**, fixed to the **354** and, on the other hand, is connected to (not illustrated) arranged on the locki aligning tooth **352**, the parts **352** and **354** acted upon that the stem of the screw moved against the right-hand edge of the gated hole in the locking and aligning toot whereby their normal position in relation t other is determined. On the locking and ing tooth **352** is arranged a tooth-like pa (Figure 9) which, in a manner to be herei

described in detail, is capable of co-acting with the toothed wheels, arranged on the left-hand cross totalizer Q1. A nose 361 (Figure 10) provided on the lever 354, is normally in engagement with the master wheel 362 loosely rotatable on the shaft 323. With the master wheel, 362 and the sleeve 362*a*, a coupling half 363 (Figure 9) is rigidly connected.

A lug 364, correspondingly formed so that in Figure 9, on the bar 342, is capable of co-acting, by means of a face, 365 (Figure 9), with a face 366 of a locking and aligning tooth 367. This is fork-shaped at its forwardly directed end and embraces with this end a sleeve (not illustrated) arranged so as to be loosely rotatable on the shaft 323. By means of a screw 369*x* which projects into the elongated hole 368 (Figure 9) of the locking and aligning tooth 367, and which is screwed into the lever 369, rigidly mounted on the shaft 353, the locking and aligning tooth 367, is guided. This is of tooth-like construction at its forked part 370, and this part is capable of co-acting with the toothed wheels (not illustrated), arranged in the cross totalizer Q2. The tooth 371 of the locking lever 369 (Figures 9, 10) is in engagement with the teeth of the master wheels 372, which are loosely rotatable on the shaft, 323. By means of a spring 373*x*, which, on the one hand, engages with a pin 373, arranged on the lever 369, and, on the other hand, is connected to a pin 367*a* (Figure 9), fixed to the locking and aligning tooth 367, the parts 367 and 369 are so acted upon that the stem of the screw 369*x*, which is screwed into the lever 369, lies against the edge 374 of the elongated hole 368, of the locking and aligning tooth 367, whereby its rest position is determined

With the master wheel 372, the sleeve (not illustrated) is in fixed relation. To the sleeve, a coupling half (not illustrated) is fixed. As will be evident from the above, the sleeve 363*a*, the master wheel 362, the sleeve 362*a* and the coupling half 363, are connected with one another and are loosely rotatable on the shaft 323, but are not axially displaceable thereon. The same holds for the part 372.

On the shaft 353 (Figure 10) a lever 378*a* is rigidly mounted, which by means of its part 379, formed correspondingly to that in Figure 10, acts in a mouth 380 of a two-armed lever 381, swingably mounted on the shaft 142. With the nose 378*b* of the lever 378*a*, a spring 378*c*, engages, which acts on the shaft 353, in the clockwise direction and thus holds the parts 354 and 369 in engagement with the master wheels 362 and 372. The lever, 381, is arranged on the outside of the right-hand side wall 125 of the calculating mechanism. This lever is constructed with its upper end of fork-shape. With this fork-shaped part 382 engages a nose 383 of a lever 384, rigidly mounted on the shaft 142 and having its upper end bent-off at right angles. The lever 384, moreover, is arranged at the left of the right-hand side wall 125 of the calculating mechanism.

The individual parts of a totalizer of usual type used up to Mercedes Addelectra machine will now be described in detail.

On a shaft 456 (Figure 11) rigidly mounted in the two side walls 454 (Figure 11) and 455 (not illustrated), a lever 457 is swingably mounted in the lowest decimal place, and is formed with its lower end of fork-shape. The release lever, 202 (Figure 7) hereinbefore described, is capable of engaging in the fork-shaped part 458, and of acting on the lever 457. With the lever 457 there engages a spring 459, which on the other hand is connected to a shaft 460 mounted in the two side walls 454 and 455 of the column totalizer T. The spring 459 acts on the lever in the clockwise direction round the shaft 456, whereby its normal position is determined by the tooth 461 of the lever 457 being in engagement with the 30 tooth toothed wheel 188 H*t* (Fig. 2, 7) rotatably mounted on the shaft 462.

With the toothed wheel 188 H*t* of the lowest decimal place, a disc 465 provided with three tens-shift teeth 464, and a disc 466, are rigidly connected. The three parts 188 H*t*, 465 and 466, are produced from a single piece and consequently represent a single element. The nose 467 provided on the upwardly-directed free end of the lever 457 (Figure 11) is capable of acting on a flap 468 rockably mounted in the two side walls 454 and 455.

To the right of the lever 457 (as seen in Figure 11) there is a lever 469 swingably mounted on the shaft 456. The downwardly directed limb 470 of the lever 469, is of fork-shape, and is capable of co-acting likewise with the release finger 202 above mentioned. The nose 471, of the lever 469, co-acts likewise with the flap 468. On the lever 469, a transfer wheel is rotatably mounted by means of a headed rivet 472 (Figure 11), the transfer wheel consisting of a ten-tooth toothed wheel 473, a ten-toothed Maltese wheel 474 (Figs. 13 and 14) and a ten-tooth toothed wheel 475, produced from a single piece, of which the toothed wheel 473, is capable of co-acting with the three-toothed tens-shift disc 465, and the Maltese wheel 474, with the locking disc 466. The disc 466 is provided with three notches 476, for the free passage of the teeth of the Maltese wheel.

The toothed wheel 188 H*t* is, further, in engagement with a toothed wheel 477 (Figure 11) which is loosely rotatable on a shaft 478, rigidly mounted in the two side walls 454 and 455 of the column totalizer T. The toothed wheel 477, again, is in engagement with the toothed wheel 480, loosely rotatable on the shaft 479, which is rigidly mounted in the two side walls 454 and 455 of the column totalizer. A number rolier 481 is rigidly connected with the toothed wheel 480. The toothed wheel, 475, associated with the lowest decimal place of the hundredths decimal place, is in engagement with the wheel 188 Z*t* of the tenths decimal place. The parts above described for the hundredths decimal place are similar for the tenths, units, tens etc. decimal places. In the following therefore only the differences will be pointed out.

By means of a lever 482 (Figures 11 and 12) swingably mounted on the shaft 456, of which lever the nose 483 (Figure 12) acts on a part 484, arranged on the flap 468, the flap 468 is held swung in the anti-clockwise direction (seen in Figure 11), whereby its rest position is determined by contact of the noses 467 of the levers 457, 469 on the one hand, and, on the other hand, by contact of the nose 461 of the lever 457, in the tooth spaces of the toothed wheels 188. The lever 482, moreover, is held swung in the clockwise direction (seen in Figure 11) by means of a spring (not illustrated) which engages with the hole 485, of the lever 482.

Since in the pointing off-place of the column totalizer, which is in working position, no transfer into this column totalizer is permitted to take place, the locking shaft 142 (Fig. 7) and the parts

located on it are prevented from being unlocked by the release finger **202**, which when the pointing off-place of the column totalizer is opposite the master wheel **189** co-acts with the part S (Fig. 11) swingably mounted on the shaft **456** of the column totalizer T, in such a manner that the projection **487** of part S comes to lie against the shaft **488**, fixed in the side walls **454**, **455** of the totalizer T. Consequently from swinging outwardly the release finger **202** is prevented.

The method of operation of the subject of the invention shall now be explained by the aid of an example of a calculation.

After the form is inserted, to commence with the name "O. Schmidt" (Figure 15) is typed in the column indicated by "1" by striking the letter keys **32** (Figures 1 and 2) whereby the paper carriage **4** is traversed stepwise to the left and the column of the sheet indicated by "2" has moved into the typing position. In the column "2", the number "15" is now entered by striking the corresponding number typing keys **33** (Figures 1 and 2).

After the number "15" has been typed and by utilizing the space key S*k* (Figures 1 and 2) the paper carriage **4** has been brought into a position in which the column indicated by "3" is in the typing position. By means of the letter keys **32**, the "months" column "3" is now filled in, whereby the paper carriage **4** is brought so that the column of the sheet indicated by "4" is in the typing position.

In order to facilitate the survey of the eight totalizers T1 to T8, necessary for filling up the sheet illustrated in Figure 15, and the type of shift of the cross totalizers Q1 and Q2 (Figures 1 and 2) which the known control plates **301** (Figures 1, 9) of the column totalizers T1 to T8 are set for the kind of calculation of the cross totalizers Q1 and Q2, a table is illustrated in Figure 16.

As already stated, the paper carriage **4** is located so that the column "4" of the sheet is in the typing field, whereby the totalizer T1 is also in the working position Moreover, the carriage *s2* carrying both of the cross totalizers Q1 and Q2 has been taken so far to the left by the column totalizer T1 and the coupling device *s*, *s1* (Figure 1) that the corresponding decimal places of the totalizers lie opposite to the master wheels **362** (Figure 9) and **372**. Now the calculating keys **34**, corresponding to the amount of "RM 200" are depressed after one another, the key corresponding to the value "2" being struck first. It may be first remarked that in consequence of the positioning for addition of the change-over gear (not shown) by the setting plate **301**, of the totalizer T1 this amount is added in the cross totalizer Q1. On the depression of the calculating key lever corresponding to the value "2", the rearwardly-directed limb on the calculating key lever **82** (Figures 5 and 7) is swung round the shaft **68** in the clockwise direction, whereby the associated U-shaped stop member **85**, the downwardly-directed limb **84** of which contacts on a face **82*a*** of the calculating key lever **82**, is swung in the anti-clockwise direction round its shaft **87**. The contact pin **131**, provided on the stop piece **85**, thereby moves into the path of movement of the arm **130** of the feeler finger **129**, corresponding to the value "2." Further, on the further depression of the already mentioned calculating key **34**, the pawl **95** (Figures 2, 5 and 7) arranged on the key lever **82**, acts on the right-angled upwardly bent nose **97**, of the bar **98**, mounted on the pins **98*a*** (Figures 5 and
swings this in the clockwise direction agai
action of the spring **109**. Moreover the ec
of the lug **98*x*** (Figure 5) of the bar **98**
from the edge **103*g*** of the bearing memb
which is formed as a stop **103*a*** whereby the
100, **101** and **111** rigidly mounted on the sh
and further the three-armed lever **114**, m
on the shaft **68**, and in engagement with th
114, by means of the pin-slot connection 1
can follow the pull of the spring **115**.

On the swinging of the parts **100**, **98** a
in the anti-clockwise direction, the nose
the bar **98** slides underneath the nose **95*d***
pawl **95**. The locking bar **110**, swingab
ranged on the shaft **99**, which, at its e
account of the pull of the spring **110*b***, lies a
pins **100*b*** and **101*b*** respectively, likewise p
pates in the movement through the release
bar **98** by the stop **103*a***, and is swung in th
clockwise direction. By the movement
locking bar **110**, the upwardly-directed
angled bent bridge **110*g***, slides over a nc
(Figure 5) of the depressed key lever 8
locks the same in the depressed position.
ther, a part **120*c***, fixed to the locking b
participates in the swinging movement anc
along on the under edge of a two-armec
120 (Figure 3) swingably mounted on th
68 and, in consequence of the pull of the
123, attached to the lever **120**, is held in
cess **120*d*** until after a revolution of the cc
consisting of the cams **69**, **71**, **72**, the lev
the part **120*c***, as well as the locking b
are released again in a manner to be la
scribed. A depressed calculating key lever,
fore, is not released again, owing to the
means, **120*c*** and **120*d***, until the corresp
value has been transferred. Further simu
ous depression of two calculating keys **34**,
take place owing to a roller lock (not illust
As already explained, on striking the calc
key **82**, corresponding to the value "2," t
tem of levers **100**, **101** and **111**, attached
shaft **99**, as well as the three-armed lev
swingably mounted on the shaft **68**, hav
released, whereby the latter lever under t
of its spring **115**, has been swung in the di
of the arrow "*m*" (Figures 5 and 2). Th
114*x* of the upwardly-directed arm **114*a***,
lever **114**, moves out of reach of the nose
the pawl **74**. The downwardly-directed ar
on the other hand, has moved into the p
movement of the cam **72**. Since the paw
displaceable in relation to the cam **72**, by
of the pin-slot connection **75**, **76**, **77**, **78**
the compression spring **79**, and was loc
the nose **114*x*** of the lever **114**, the pawl
follow in the arrow direction "*c*" under th
sure of the spring **79**, on swinging out of th
nose **114*x***, whereby the tooth **74*a*** of th
74, moves into engagement with the t
wheel **73**, continually rotated by way of th
58 (Fig. 1) **59**, **56**, **57** and **28** to **30**, wher
three cams **69**, **71** and **72**, are coupled wi
toothed wheel **73**, so that they participate
rotational movement of the toothed wheel
the arrow direction "*b*" (Figures 2 and 5

In the rotation of the three cams, aft
nose **80** of the pawl **74**, has just moved pa
nose **114*x*** of the three-armed lever **114**, th
72 first acts at 60 degrees (Fig. 17) on th
114*b* of the three-armed lever **114** lying
path of movement, and brings the upper ar
of the lever **114**, in the anti-clockwise di

into the path of movement of the nose 80 of the pawl 74, and acts on the pawl 74 in the raising sense in a manner to be later described. By the return of the lever 114, the tension spring 115, is again tensioned and the bar 98, mounted on the levers 100 and 101 is returned by the arm 111 connected to the lever 114, and by the resulting swinging movement of the shaft 99, in the clockwise direction, whereby the nose 98*x* of the bar 98, moves behind the bend 103*a* of the stationary support 103, by means of the pull of the spring 109. In consequence of the rocking movement of the bar 98 in the clockwise direction, the nose 95*d* of the pawl 95 falls behind the nose 97 of the bar 98 since at this moment the key lever follows the movement of the flap 98, and rests behind the nose 97 of the flap 98, since at this moment the key lever 82 concerned, is still depressed and is held by the locking bar 110 which is held by the part 120*c* through the lever nose 120*d*. Although the locking bar 110 is held swung in its position in the anti-clockwise direction, the part 100, 98 and 101, in consequence of the resilient connection of the springs 110*b*, are still capable of swinging in the clockwise direction.

On the further rotation of the three arms 69, 71, 72 the roller 133 on lever 132, which by means of the pull of the spring 141, is held in contact with the cam 69 (Figure 5) first follows at 10 degrees (Fig. 17) the depression of the same, whereby the draw-bar 134, jointed to the roller lever 132, following its spring 141, is drawn in the direction of the arrow *a*. The part 137, pivotally connected with the draw-bar 134 (Figure 7) by means of the screw 135, is thereby moved downwards along with the draw-bar. The pin 143, fixed to the part 137, which passes through the slot 144, of the lever 136, takes the latter and the shaft 142 along with it in the clockwise direction. The angle lever 150, which on the one hand is jointed to the lever 136 through an angle member 148, is likewise, through the movement of the draw-bar, swung round its point 151 in the anticlockwise direction. Consequently the downwardly going arm of the lever 150 displaces the toothed wheel 159, non-rotatably mounted on the shaft 158 in the arrow direction *a*2, by means of its grooved connection 155 and 156, whereby the teeth of the same are coupled with the teeth 177 of the calculating sector 174. The pins 160 (Figure 3) arranged on the toothed wheel 159, which are continually guided in the grooves of the claw 161, rigidly mounted on the shaft 158, ensure that the teeth of the toothed wheel 159, slide securely into the teeth of the calculating sector 177 (Figure 7). As already mentioned, the shaft 142 is rotated in the clockwise direction by the lever 136, whereby the finger shaped lever 202 rigidly mounted on the shaft 142, is swung and the locking lever 469*a*, partially illustrated in Figure 7 (see also Figure 11) unlocks the corresponding decimal place of the totalizer T1 located in the working position.

Further, on the one hand, the adjusting tooth 203 which is rigidly mounted on the shaft 142, releases the master wheel 189, and the shaft 186 connected with it, and, on the other hand, the adjusting tooth 179 likewise rigidly mounted on the shaft 142, releases the toothed wheel 178 and the shaft 158 connected with it.

Further, the arm 256, mounted on the shaft 142 (Figure 8), thereby acts by way of its spring 258 on the aligning tooth 253. This is now in engagement with some of the next higher decimal places lying adjacent to the decimal place located in the working position in relation to the master wheel 189 (Figure 7) of the column totalizer. Consequently, the aligning tooth, 253, is moved in the direction of the arrow *a* whereby the driving wheel or driving wheels of the higher decimal places which are not in the working position, are released so that these wheels 188, in the event of tens transfer ensuing, can freely rotate.

The locking lever 199, pinned to the shaft 142, swings in the clockwise direction and releases the nose 197 of the lever 196 jointed to the lever 194, by means of a screw 195.

By the swinging movement of the shaft 142 (Figs. 9, 10) in the clockwise direction, the levers 384 and 381 are also swung in the clockwise direction, whereby the part 378*a* is swung together with the shaft 353 and the two locking teeth 354 and 369, in the anti-clockwise direction. Accordingly, these two locking teeth also release the master wheels 362 and 372 of the cross totalizers Q1 and Q2. Moreover, the release fingers, 353*a* and 353*b*, attached to the shaft 353, are also swung with this shaft in the anti-clockwise direction, whereby the locking lever of the corresponding decimal places of the cross totalizers Q1 and Q2 are released. Since, as stated, the locking levers 354 and 369 mounted on the shaft 353, are also swung in the anti-clockwise direction, so they take along with them, by means of their associated springs 356 (in Figure 9 only one is illustrated) the aligning teeth 352 and 367, whereby in a similar manner as by the aligning tooth 253, (Figure 8) the driving wheels of the cross totalizers Q1 and Q2 are released for possible tens transfer occuring.

After these movements have taken place, the cam 72, meanwhile, on further rotation has moved so that its lower curved part has arrived in the vicinity of the roller 168 on lever 167 whereby the lever 167 at 30 degrees (Fig. 17) following the pull (Figure 7) of the spring 171 engaging with the slide 170 and the correspondingly formed cam 72, is swung round its shaft 87 and, accordingly the slide 170 jointed by means of the screw 169 (Figure 5) is drawn in the direction of the arrow *a*. By the downward movement of the slide 170, the slot 173*x* (Figure 7) acts on the roller 175 (Figures 3 and 7) arranged on the calculating sector 174, 177 and projecting through the slot 173*x* and swings the sector 174, 177 in the direction of the arrow *p*. Since the latter is rigidly connected to the shaft 128, by means of the clamping device 176, this shaft participates in the rotational movement in the direction of the arrow *p*. The feeler fingers 129, rigidly mounted on the shaft 128 and designed for the values "0" to "9", are thereby swung together in the anti-clockwise direction and so far until the feeler finger 129 corresponding to the value "2" strikes on the pin 131 of the stop-piece 85, which has been swung upwards by depression of the calculating key 34, corresponding to the value "2". The stroke of the feeler finger 129, is thereby transmitted to the calculating sector 174, 177, and accordingly the toothed wheel 159 (Figure 7) which is in engagement with the sector, is rotated through two units, whereby the value is transmitted by way of the shaft 158, and the change-over gear 180 (Fig. 7) 187, which was previously set for addition, through the knob 315 (Figure 1) and the shaft 186, to the main driving wheel 189, which on its part, registers the value "2" in the corresponding totalizer decimal place of the column T1.

Moreover, the rotational movement of the shaft 158 (Figure 7) is transmitted by way of the

change-over gear only to the cross totalizer Q1, whereby the value "2" is registered only in this cross totalizer.

By the contact of the feeler finger 129, corresponding to the value "2", with the stop member 131, the slide 170, together with the roller 168 on lever 167 was prevented from further downward movement and since the formation of the cam 72 (Figure 5) is adapted for the greatest stroke, namely for the stroke of the feeler finger 129, corresponding to the value "9", so the roller 168 on lever 167, 168 remains for a short time freely suspended and on the further rotation of the cam 72, is engaged and brought back. Before, however, the return of the roller 168 on the lever 167 and the slide 170 connected with it occurs, the arms 204 and 211 (Figures 3 and 7) rigidly mounted on the ends of the shaft 128, participate in the swinging movement of the feeler fingers 129 (or of the calculating sector 174, 177) and of the shaft 128. Accordingly the frame 213, 216 and 206, jointed at the points 212 and 205 and guided on the slide bars 219, 222 by means of screws 220 and 217, will slide forwards through an amount corresponding to the value "2". The lower edge 216*a* of the front bridge 216, thereby reaches a position over the nose 35*g* (Figures 2, 7) of the number key lever 35, corresponding to the value "2".

Shortly, thereafter, the roller 166 which is mounted on lever 165, 166, rigidly connected with the shaft 87 (Figures 5 and 7) falls into the depression of the cam 71 at 130 degrees (Fig. 17) whereby the arms 219 and 222, rigidly connected to the shaft 87, are swung in the clockwise direction by the springs 225 engaging with their short arms 223 and 224, and with them also the frame 213, 216, 206 guided by them. This frame thereby strikes on the nose 35*g* (Figure 7) of the number typing key lever 35, corresponding to the value "2" and presses this lever downwards against the action of its spring 38 (Figure 2). The control tooth 49*c* of the draw-hook 49, is moved by the coupling lever 41, into engagement with the cam shaft C. This now draws the draw-hook 49 forwards, which by way of the intermediate lever 47, causes the type lever 54 to strike on the platen 5, whereby during the striking movement the control tooth 49*c* moves out of engagement with the cam shaft C. Through the striking movement of the type lever, the paper carriage has been moved by way of the parts 54*a* to 54*f* one step to the left under the pull of the carriage draw-spring so that the next lower place of the column totalizer T1 now lies opposite to the main driving wheel 189 (Figure 7).

After the termination of the calculating operation and before the commencement of the paper carriage shift (in which the time for registration of the value "10" is to be taken into consideration) the raising of the roller 133 on lever 132, which is loosely mounted upon the shaft 87, is effected at 145 degrees (Fig. 17) by the elevated part of the cam 69, which is indicated by 69*c*. The slide 134 (Figure 7) is thereby raised in the opposite direction of the arrow *a*. It thereby takes along with it the lever 137, by means of the screw 135, in the anti-clockwise direction whereby by way of the parts 143, 145 and 146, the lever 136 is swung in the anti-clockwise direction. In consequence of this swinging movement of the lever 136, on the one hand, the shaft 142 is swung in the anti-clockwise direction, and, on the other hand the wheel 159, is brought out of engagement again (Figure 3) with the calcu-

lating segment 174, by means of the pa
and 159 (Figures 7 and 3). By the sw
movement of the shaft 142 in the anti-clo
direction, the releasing finger 202 (Figure
released the locking lever (in Figure 7 illu
broken off), lying opposite to it, so that t
culating place of the totalizer T1, in whi
value "2" was registered is again locked.
swinging movement of the shaft 142, in th
clockwise direction, the lever 199 (Figure
also been swung along with it and has
the lever 196 against the action of its spri

Further, the arm, 256 (Figure 8) has
the aligning tooth 253, into its position illu
in Figure 8, whereby the wheel 188 (Fig
and 7) possibly rotated by a tens tran
aligned. This is advantageous for the
that with wide totalizers, in consequence
avoidable slight play in manufacture, the
bers visible in the inspection aperture ar
to be disposed in spiral fashion, where
numbers located in the higher places a
casionally not completely shown. This is a
by the aligning tooth 253.

Further, by the swinging movement
shaft 142, in the anti-clockwise direction
7) the release fingers 353*b*, 353*a* of the tw
totalizers Q1 and Q2, are swung, by way
parts 384, 383, 382, 381, 378*a* and 353
clockwise direction, whereby the corresp
locking levers were also released and
quently the associated calculating place
locked. Further, the teeth 179 and 203, f
the shaft, 142 (Figure 7) and also the te
and 369 fixed on the shaft 353 (Figures
10) have entered again into their wheels
189 and also 362 and 372, whereby the ca
ing mechanism also is again locked. Mo
the aligning teeth 352 and 367 have been
by the levers 354 and 369 back into their
lying opposite to them, whereby the sa
ject is attained as by the aligning too
(Figure 8). As soon as these locking ope
are completed, the carriage shift operat
fected by the typing operation as above de
follows.

After the locking operation is effected, t
er 166 on the lever 165, which is rigidly m
on the shaft 87, is raised at 225 degree
17) by the raising edge 71*a* (Figure 5)
cam 71. The shaft 87 is thereby swung
anti-clockwise direction. Accordingly, th
222 and 219, fixed on the shaft 87, are also
in the anti-clockwise direction, where
frame 213, 216, 206 mounted in them, is
into its upper position. In consequence
the nose 35*g* (Figures 2, 7) of the numl
lever 35, corresponding to the value "2"
leased. This now returns into its rest p
under the action of its spring 38 (Fig
whereby the coupling lever 41, mounted
key lever again engages over the nose 4
co-operating draw lever 49.

In the swinging movement of the shaft 8
ure 7) in the anti-clockwise direction, t
194 has also raised the lever 196, whereb
the action of the spring 200, the nose 197
lever snaps over the nose 198 of the le
already located in its rest position.

After the raising of the frame 213, 2
the rising face 72*b* (Figure 5) has come
degrees (Fig. 17) into operation on the
168 mounted on lever 167 which is loosely
ed on the shaft 87, and has brought th
into its rest position. The slide 170 was

raised against the action of its spring 171, whereby the inclined slot 173*x* of the slide, acts on the roller 175 of the calculating sector 174, which has meanwhile been released from the wheel 159, and swings this sector in the opposite direction to the arrow *p*. In consequence of this, on the one hand, the shaft 128 rigidly connected to it, is brought back together with the feeler fingers 129 into their rest position, while on the other hand, the number key striking frame 213, 216, 206 is returned to its rest position illustrated in Figure 7, by way of the arms 204 and 211 jointed to it and rigidly mounted on the shaft 128, in which position the frame is held by the elevated part of the cam 72 (Figure 5).

Further, before the return movement of the number key striking frame 213, 216, 206, into its rest position illustrated in Figure 7 has taken place the rising edge 69*c* (Figure 5) of the cam 69, has come into operation at 162 degrees (Fig. 17) on the end 120*a* of the lever 120, whereby this lever is swung against the action of its spring 123. Consequently the nose 120*b*, of the lever 120, releases the part 120*c* of the locking bar 110, whereby this bar under the action of its spring 110*b* (Figure 6) tensioned by the previous return of the bar 98 into its rest position, likewise moves back into its rest position. Accordingly, the nose 82*h* (Figure 5) of the calculating key lever 82 corresponding to the value "2" is released, which lever under the action of the spring 89 engaging with its associated stop member 85 (Figure 7) now returns along with the stop member 85 into the rest position illustrated in Figure 7, whereby the pawl, mounted on the calculating key lever 82, also rests again over the edge 97 of the bar 98.

Finally, the nose 80 of the pawl 74, mounted on the coupling disc 72 (Figure 5) pushes against the nose 114*x* of the three-armed lever 114, already located in its rest position, whereby the pawl 74 is brought out of engagement against the action of its spring 79, with the wheel 73 of the continually rotating shaft 58. In order to prevent the cam series 69, 71, 72 from springing back at the moment when the pawl 74 is raised out of engagement with the toothed wheel 73, the roller 117 of the roller lever 116, snaps at 200 degrees (Fig. 17) into the depression 69*d* of the cam 69 under the action of its strong spring 119, whereby the cam series 69, 71, 72 on the pawl 74 being raised, is held in their position illustrated in Figure 5.

It would be too exhaustive a matter to repeat the process already described for the registration of the value "2", for the values to be registered in the totalizers T2 to T6, since the operations are exactly the same.

In order to pass from the comma place into the next lower decimal place, the space key S*k* (Figures 1 and 2) is struck, so that the totalizer T1 is now located with its tenths decimal place in the working position.

If the numerical example given in Figure 15 is now considered, so it should be clear without further explanation that for the further columns, including the column 9, the same procedure is followed only with the difference that in the columns 5 to 7, inclusive, the cross totalizer Q1 is changed over to subtraction controlled by the corresponding column totalizers T2 to T4. The values shown in the columns 8 and 9 (Fig. 15) are added in both of the cross totalizers Q1, Q2 controlled by the totalizers T5 and T6.

The amount "184,30" is then visible in the cross totalizer Q1 and the amount "4,30" in the cross totalizer Q2.

In order to withdraw these amounts from the cross totalizers Q1 and Q2, and register them automatically in the column totalizers T7 and T8, it is necessary first to depress the tabulator key 93 for the hundreds decimal place (Figure 1) in order to bring the hundreds decimal place of the column totalizer T7 into the working position, whereby the cross totalizers Q1 and Q2 are also moved by means of the coupling devices *s1* and *s2* (Figure 1), so that their hundreds decimal places also are brought into the working position.

As soon as the column totalizer T7 arrives in the working position, the pre-setting plate 301 (Fig. 1, 9), which has been set on subtraction, of the column totalizer T7, acts on the nose 302 of the angle lever 303, and swings the same round the shaft 304 in the clockwise direction, against the action of the spring 307.

In this movement, the fork-shaped part of the lever 303, acts on the pin 309 riveted to the part 311, whereby the same is swung in the clockwise direction. Since the pin 309 is in engagement with the recess 312 of the part 298, the control rod 298 is displaced in the direction of the arrow *r*, indicated in Figure 9. In consequence of this, the lever 299, the shaft 300, the lever 320 and the lever 347 are swung in the anti-clockwise direction, whereby the toothed wheel 162 is displaced to the left. By this movement the direction of the rotation of the main driving wheel 362 of the cross-totalizer Q1 has been reversed to subtractive calculation.

Now, the key 329 for total-taking (TC) of the cross totalizer is depressed. With this operation the face 330*b* of the lever 330 acts on the nose 97 of the flap 98 and swings this in the clockwise direction against the action of the spring 109 (Figure 5). In this movement the lug 98*x* (Figure 5) of the flap 98, slides from the edge 103*g* of the bearing member 103, which is formed as a stop, whereby the levers 100, 101, 111, rigidly mounted on the shaft 99 and the lever 114 mounted on the shaft 68 follow the pull of the spring 115, which engages with the three armed lever 114.

The face 331, of the key lever 330, moreover, now acts on the depression of the key 329, on the face 332 of the slide 337, so that this slide moves upwards in the opposite direction of the arrow *a* (Figure 9) and against the action of its spring 338. With this, its pin 340, acts on the incline 341*a* of the slot 341 of the slide 342, whereby the slide 342 is displaced to the left (seen in Figure 9).

Now, should it have been forgotten by inadvertence to change over the cross totalizer Q1 for subtraction, because the pre-setting plate 301 of the column totalizer concerned, in this case T7 has not been set, this is not a disadvantage since, when the slide 342 moves to the left it acts on the pin 346 fixed to the lever 345, and rotates the lever 345, the shaft 300, the levers 347 and 320 in the anti-clockwise direction, so that the driving wheel 362 is changed over automatically for subtractive operation.

In the movement of the slide 342 (Figure 9) to the left, the nose 350 of the part 348 of the slide 342 moves in front of the face 351 of the aligning tooth 352 of the cross totalizer Q1, and the nose of the part 364 of the slide 342 moves in front of the face 366 of the aligning tooth 367 of the cross totalizer Q2, so that the teeth 359 and 370 of the aligning teeth are held in engagement with the four toothed wheels (not shown) of the cross totalizers Q1 and Q2, lying to the left of the driv-

ing wheel **362** or **372**, so that the toothed wheels thus engaged are locked. The wheels of the cross totalizers Q1 and Q2 correspond, moreover, to the wheels **188** of the column totalizer.

In the rotation of the three cams **69** (Figure 5) **71** and **72**, the roller **133** on lever **132**, moves under the action of the spring **141** engaging with the rod **134**, from the elevated part of the cam **69**, on the lower part of the same, whereby the draw-bar **134** moves in the direction of the arrow *a*. Hereby, the toothed wheel **159** is brought into engagement with the teeth **177** of the calculating sector **174**, by way of the above-described part **137** (Figure 7) **143**, **136**, **148**, **150**, **155** and **156**. Further, on the displacement of the draw-bar **134** in the direction of the arrow *a*, the shaft **142**, and the parts **199**, **179**, **203**, **256** (Figure 8) **202**, and **382** rigidly connected to it are swung by way of the parts **137**, **143**, **136**, in the clockwise direction (seen in Figure 7) whereby by means of the release finger **202**, the locking lever **469**, (Figures 7 and 11) lying opposite to it, is raised and accordingly the calculating place located in the working position of the column totalizer T7 is unlocked.

In the swinging movement of the shaft **142** in the clockwise direction (Figure 10) the lever **384** fixed to it, is likewise swung in the same direction. As a result of this, the lever **384** acts, by means of its nose **383**, on the lever **382**, whereby the latter is swung in the clockwise direction. The lever **378***a*, which is in articulated connection with the lever **382**, is hereby swung in the anticlockwise direction against the action of its spring **378***c* in which swinging movement the shaft **353** and the levers **354** and **369**, as well as the release fingers **353***b* and **353***a* participate, whereby the master wheels **362** and **372** are unlocked, and the toothed wheels located in the cross totalizers Q1 and Q2 are released.

In the further rotation of the three cams **69** (Figure 5) **71**, **72**, the roller **168**, rotatably mounted on the lever **167**, moves from the elevated part of the cam **72**, on to the lower part of the same. As a result of this, the drawbar **170** (Figure 7) is displaced in the direction of the arrow *a* under the action of its spring **171**. The incline **173***a*, of the slot **173***x* of the rod **170**, hereby acts on the roller **175** of the calculating sector **174**, whereby this is swung in the anti-clockwise direction. Since the teeth **177** of the calculating sector **174**, are in engagement with the toothed wheel **159**, the driving wheel **362** of the cross totalizer Q1 is rotated in the subtractive direction. Until the number roller of the hundreds place of the cross totalizer Q1, which shows a "1," has moved from "1" to "0" in which case, as already mentioned, a further rotation of this number roller is not possible since the wheel **360** of the next higher decimal place (thousands place) is held fast by the aligning tooth **352** which is locked by the nose **350** (Figure 9) of the slide **342**. The calculating segment **174** (Figure 7) will be able, therefore, only to rotate through one unit. Accordingly, the master wheel, **189** is also rotated, by way of the parts **158**, **186**, **187**, **185** likewise only through one unit, whereby in the hundreds decimal place of the column totalizer T7 a "1" is registered.

By the swinging out movement of the calculating segment **174** through one unit, the lower arm **204** of this segment moves the number key striking yoke **206**, **216**, **213** forwards through one unit, whereby the number typing key lever **35**, corresponding to the value "1" is selected which key is depressed by the cam **71** (Figure 5) by way of the roller **166**, shaft **87** and arm **222**, hereinbefore described. As a result of the tion of the type bar the paper carriage one step to the left.

Consequently, the units decimal place column totalizer T7 and of the cross totali are in the working position in which the tions are again repeated. After the clea the units decimal place has been comple paper carriage is moved one step to the means of the space key, whereby the tenth mal place of the column totalizer T7 and cross totalizer Q1 has arrived in the work sition.

Now, the same operations are repeated tenths decimal place of the column total and of the cross totalizer Q1—as the key still held depressed—whereby the tenths c place of the cross totalizer Q1 moves to ze in the tenths decimal place of the colu talizer T7 a "3" is visible.

When in the manner already describ column totalizer T7 and the cross total are now moved so that their hundredths c places are in the working position and the is typed on the paper, a further carriage st lows.

According to the foregoing description, fore, a totalizer on the machine is autom cleared at one operation in which the k (S. Q) is automatically held depressed dur clearing operation, and at the termination total-taking operation is automatically r again.

As soon as the key, **329** (Figure 9) is re the bar **98** (Figure 5) under the action spring **109**, swings in the anti-clockwise di round its own pivot axis, whereby the ne rests again in front of the projection **103***g*

The machine therefore clears a total one operation whereupon the coupling **69** automatically comes to rest.

Now, the amount "4.30" registered in th totalizer Q2, is written out of the same and ferred into the column totalizer T8. To th it is again necessary first to depress the sponding tabulator key in order that th decimal place of the column totalizer T the units decimal place of the cross total move into the working position. Then, t key **329** (Figure 9) is again depressed ar depressed until the zero of the hundredth mal place has been typed on the paper. depression of the TC-key and the writi of the amount "4.30" from the totalizer the registration of the same amount in t umn totalizer T8 the same procedure take as in the writing out of the amount "184.3 the cross totalizer Q1, for which reason t not be described in detail. If the zero hundredths place has been typed on the then a carriage step results whereupon t pling **69**, **71**, **72** automatically comes to

Now, let it be assumed that at the end week or at the end of the month, the a registered in the column totalizers T1 to to be written out. To this end, the carri turn key is first depressed, whereby the carriage moves into its extreme right-han tion. Then, by means of the tabular key, t riage is moved to the left until the hu place of the column totalizer T1 is located working position. It may still be remark the cross totalizers Q1 and Q2 are held by ing lever **500** in their left-hand position a

thereby prevented from participating in the movement of the column totalizers concerned, by way of the coupling device S1 and S2 (Figure 1).

Now, the TV-key, 226a' (Figure 8) is depressed whereby, by way of the parts hereinbefore described, the pawl 74 (Figure 5) moves into engagement with the toothed wheel 73, and the three cams 69, 71, 72, participate in the revolutions of the shaft. In this case, also the pawl 74, remains in engagement with the toothed wheel 73, as long as the key lever 226 is held depressed, since in consequence of the face 226a (Figure 8) of the key lever 226, the part 114x (Figure 5) of the lever 114, cannot enter into the path of movement of the nose 80 of the pawl 74, and the nose 74a of this pawl cannot be brought out of engagement with the toothed wheel 73.

On the depression of the key lever 226 (Figure 8) the face 226c, acts on the face 227 of the lever 229, and swings the same in the anti-clockwise direction, whereby the rod 235 is moved downwards in the direction of the arrow a against the action of the spring 240, which engages with the arm 239a of the lever 239. Since the lever 239 is in connection with the rod 235, the three-armed lever 239 is swung round its axis 239x in the anti-clockwise direction. In this movement, the locking member 250, fixed to the arm 239b, moves so that it lies under the part 252 of the aligning tooth 253, so that this is held in engagement with the teeth of the driving wheels 188 of the column totalizer T1 to 8 lying opposite to it for the time being.

In consequence of the downward movement of the rod 235, the lever 238 connected with it and rigidly mounted on the shaft 192, as well as the shaft 192, are swung in the anti-clockwise direction. Since the lever 193 is likewise rigidly mounted on the shaft 192, this is also swung in the same direction. By the swinging movement of the lever 193, the toothed wheel 180 (Figures 8 and 7) is moved out of engagement with the toothed wheel 187, whereby the rotational movement, in consequence of cutting out the intermediate drive 181, 183, is transmitted directly on to the main driving shaft 186, and accordingly, the column totalizers T1 to T8 are acted on in the subtractive sense.

On the rotation of the three cams 69 (Figure 5) 71, 72, first the toothed wheel 159 is moved into engagement with the teeth 177 of the calculating sector 174, by way of the parts 69, 132, 133, 134, 137 (Figure 7) 143, 136, 148, 150 and 156. Further the shaft 142, and the parts 199, 179, 203, 256, 202 and 382, rigidly mounted thereon, are rotated in the clockwise direction by way of the parts 134, 137, 143, 136.

Moreover, in the swinging movement of the shaft 142, in the clockwise direction (Figure 10) the lever 384 is swung in the same direction, whereby the levers 354 and 369 as well as the release fingers 353b and 353a, are swung in the anti-clockwise direction by way of the parts 381, 378a. This is, however, unimportant, since the cross totalizers Q1 and Q2, as previously mentioned, are not located in the working position.

On the further rotation of the three cams 69, 71 and 72, the calculating sector 174 is swung in the anti-clockwise direction by means of the cam 72 and by way of the parts 168, 167, 170 (Figure 7) 173, 175 and since the toothed wheel 159 is in engagement with the teeth 177 of the calculating sector 174, the master wheel 189, of the column totalizer T1 is rotated from "2" to "0" by way of the parts 158, 180, 187 and 186. Further rotation of the wheel 188 of the hundreds place is not possible for the reasons hereinbefore described. By the swinging-out of the calculating segment 174, the number key striking yoke 206, 216, 213, is simultaneously moved forwards through two units whereby the number key lever corresponding to the value "2" is moved downwards by the cam 71 (Fig. 5) by way of the roller 166 and lever 165 and the "2" is typed on the paper. Hereupon, follows a carriage step to the left.

On writing out the remaining figures from the column totalizer T1 and the values out of the remaining column totalizers T2 to T8, the same operations take place. The typing of the comma is here effected in the same manner as was described on writing out the values from the cross totalizers Q1 and Q2. If one of the column totalizers T1 to T8 is to be cleared, so the coupling 69, 71, 72 comes automatically to rest in the manner described on taking the total from the cross totalizer Q1. If the TV-key 226a' (Figure 8) is then released so the slide 235, under the action of the spring 240, engaging with the lever 239, is moved upwards, whereby the lever 239, is swung in the clockwise direction round its pivot. In this movement, the lever 239, acts on the key lever 263, and swings the same downwards against the action of its spring. The corresponding tabulator key is then depressed, whereby the next totalizer T2 is brought into the working position. Thereupon, the TV-key is again depressed, whereby the same operations, as already described, are repeated. This procedure is carried out until all the column totalizers T1 to T8.

HUGO ERNST KÄMMEL.

PUBLISHED

MAY 25, 1943.

BY A. P. C.

H. E. KÄMMEL

COUPLING DEVICE FOR TYPEWRITING CALCULATING MACHINES

Original Filed May 14, 1934

Serial No. 287,668

11 Sheets-Sheet 1

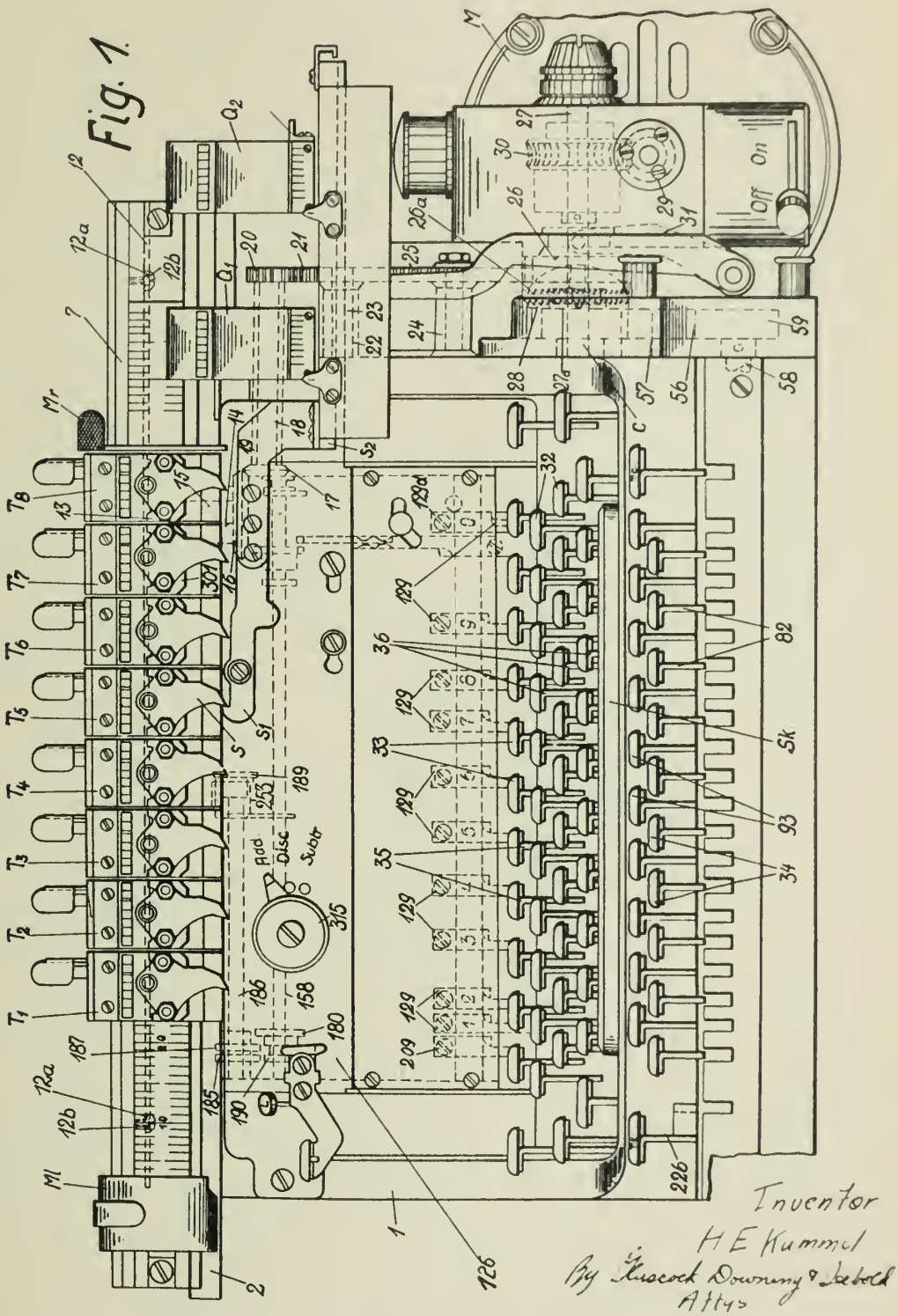

Inventor
H E Kummel
By Kuscock Downing & Seebold
Attys

PUBLISHED

MAY 25, 1943.

BY A. P. C.

H. E. KÄMMEL

COUPLING DEVICE FOR TYPEWRITING CALCULATING MACHINES

Original Filed May 14, 1934

Serial No.

287,668

11 Sheets-Sheet 2

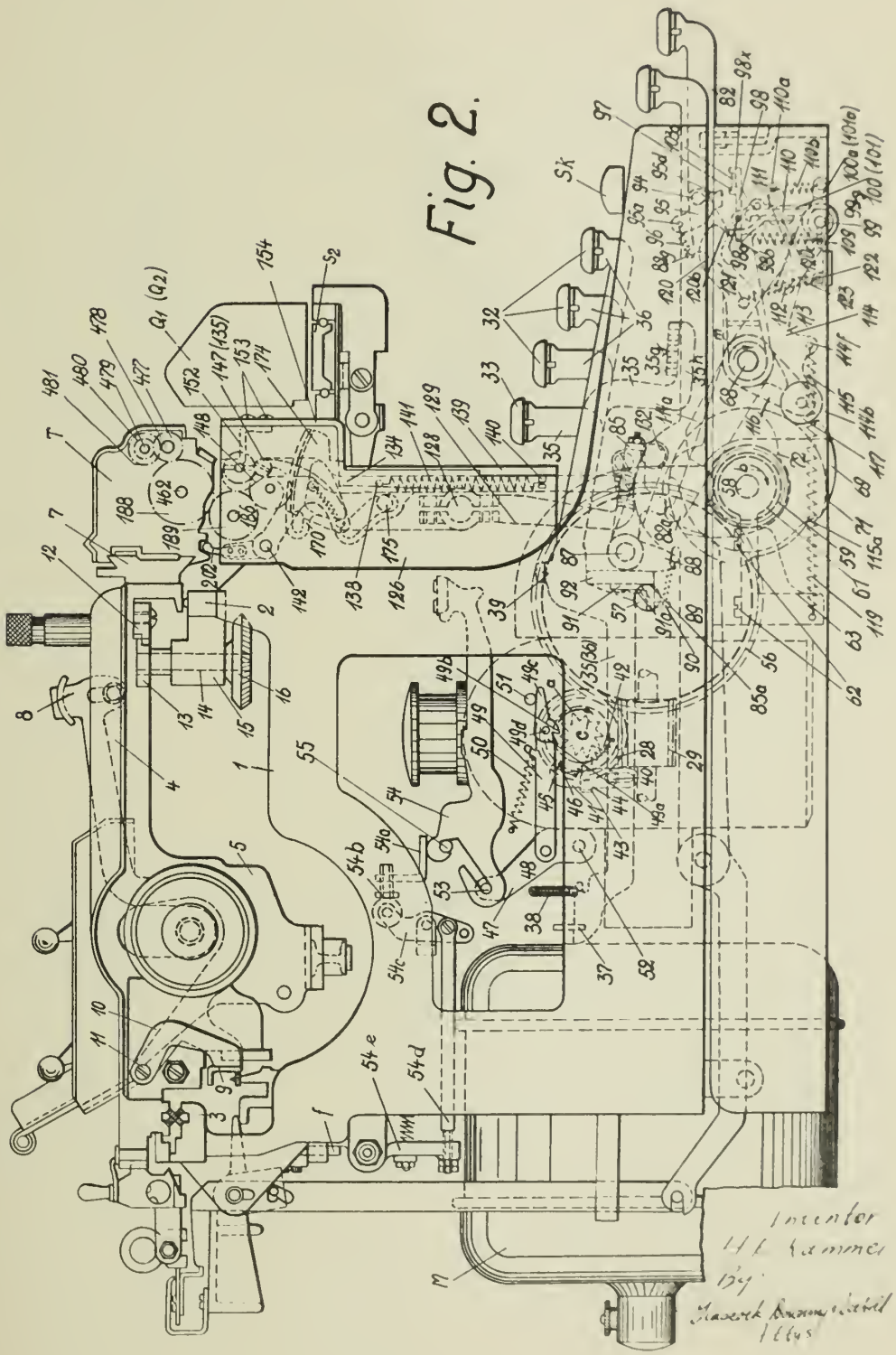

PUBLISHED

MAY 25, 1943.

BY A. P. C.

H. E. KÄMMEL

COUPLING DEVICE FOR TYPEWRITING CALCULATING MACHINES

Original Filed May 14, 1934

Serial No. 287,668

11 Sheets-Sheet 3

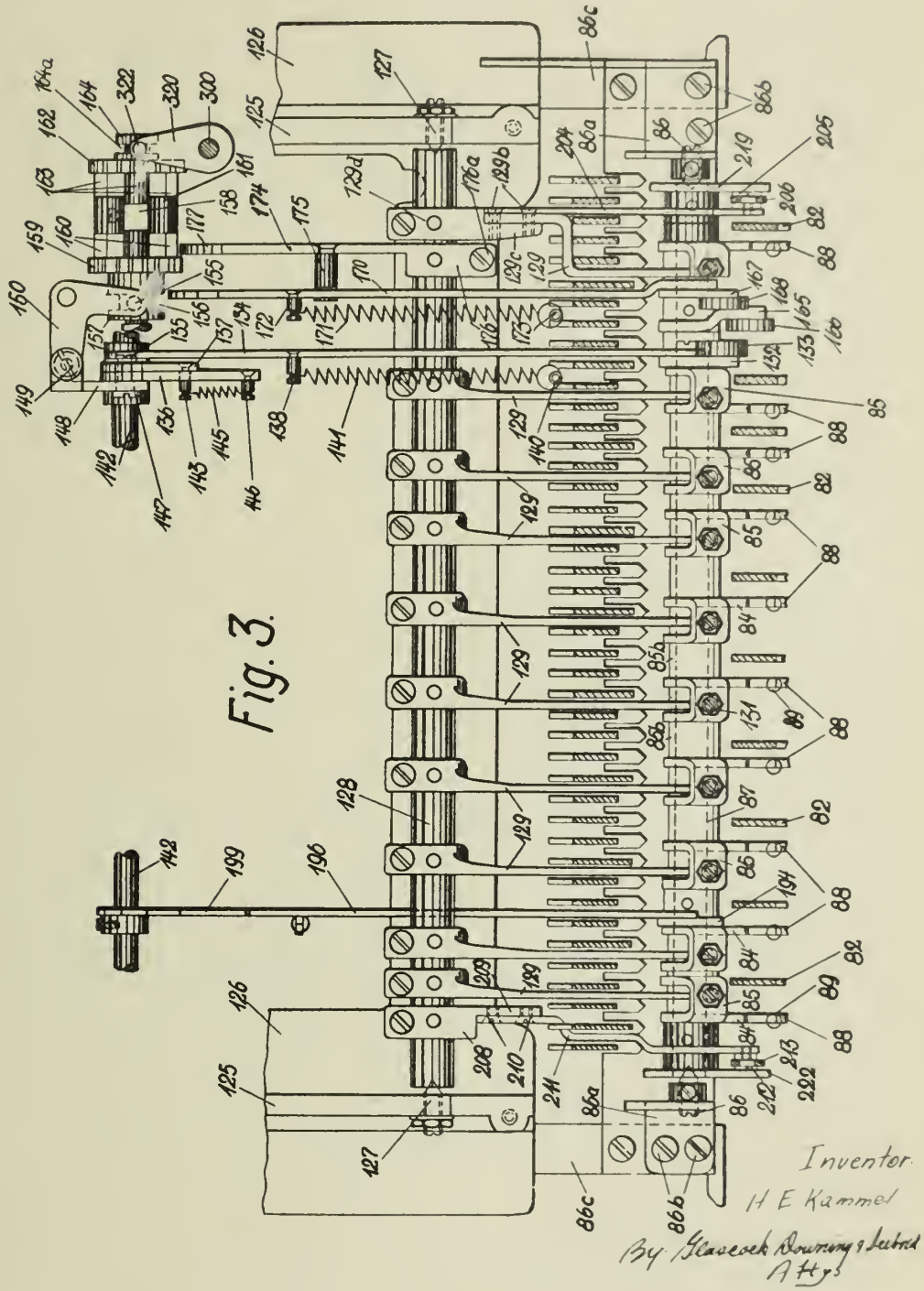

Fig. 3.

Inventor
H E Kämmel
By Glascock Downing & Seebold
Attys

PUBLISHED

MAY 25, 1943.

BY A. P. C.

H. E. KÄMMEL
COUPLING DEVICE FOR TYPEWRITING
CALCULATING MACHINES
Original Filed May 14, 1934

Serial No.
287,668

11 Sheets-Sheet 4

Fig. 4.

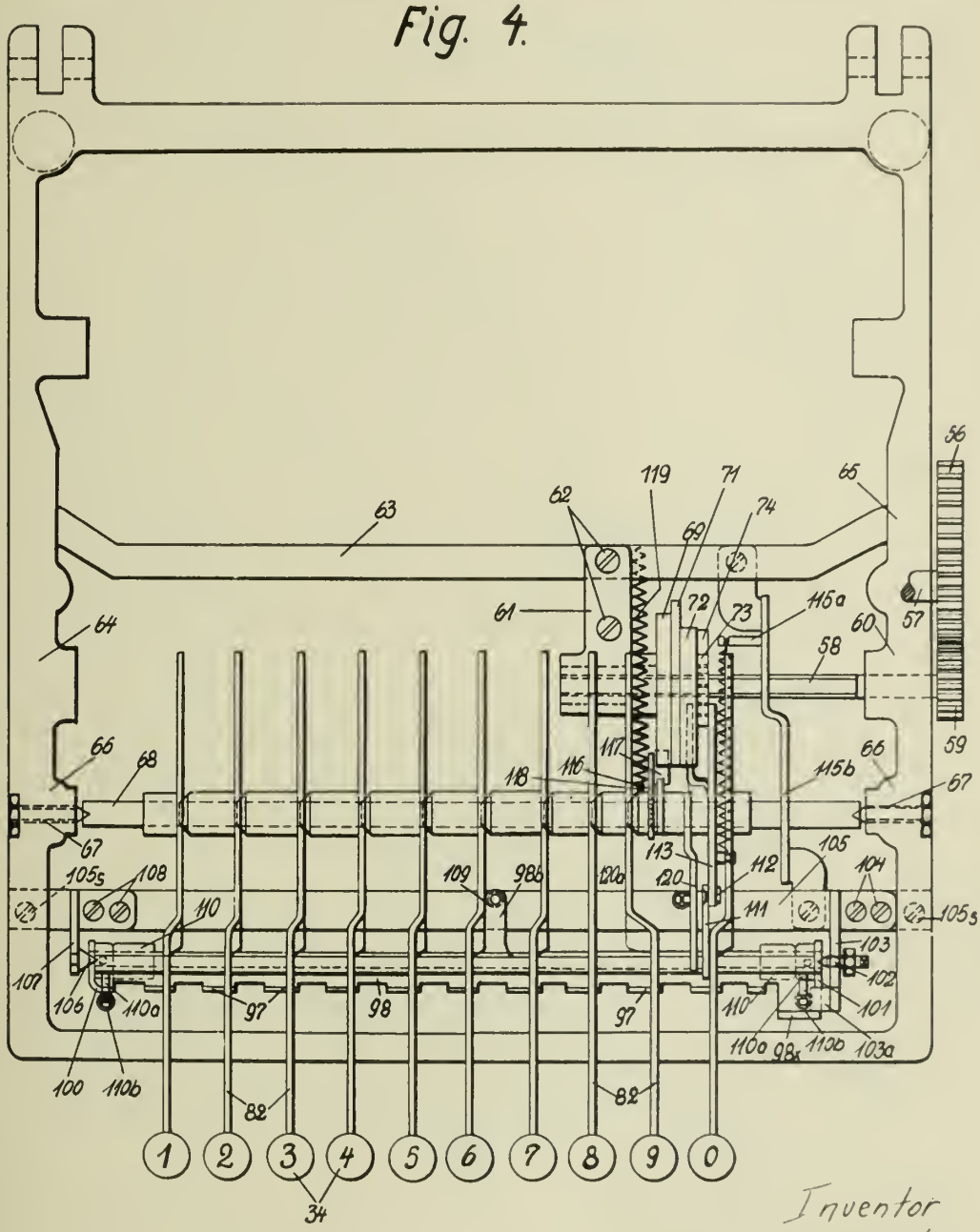

Inventor
H E Kammel
By Glascock Downing & Seebold
Attys

PUBLISHED

MAY 25, 1943.

BY A. P. C.

H. E. KÄMMEL
COUPLING DEVICE FOR TYPEWRITING
CALCULATING MACHINES
Original Filed May 14, 1934

Serial No.
287,668

11 Sheets-Sheet 5

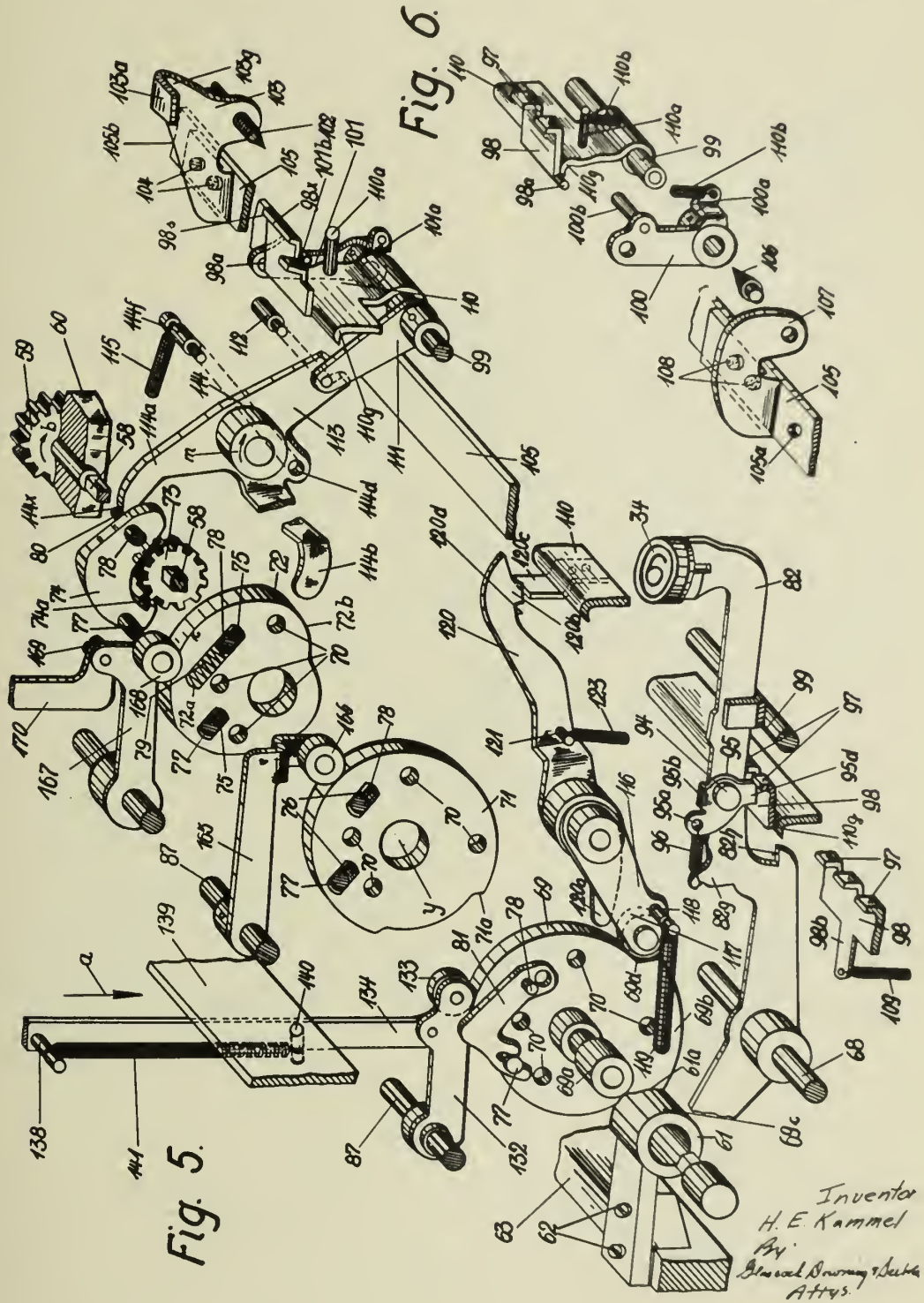

PUBLISHED

MAY 25, 1943.

BY A. P. C.

H. E. KÄMMEL
COUPLING DEVICE FOR TYPEWRITING
CALCULATING MACHINES
Original Filed May 14, 1934

Serial No.
287,668

11 Sheets-Sheet 6

Fig. 7.

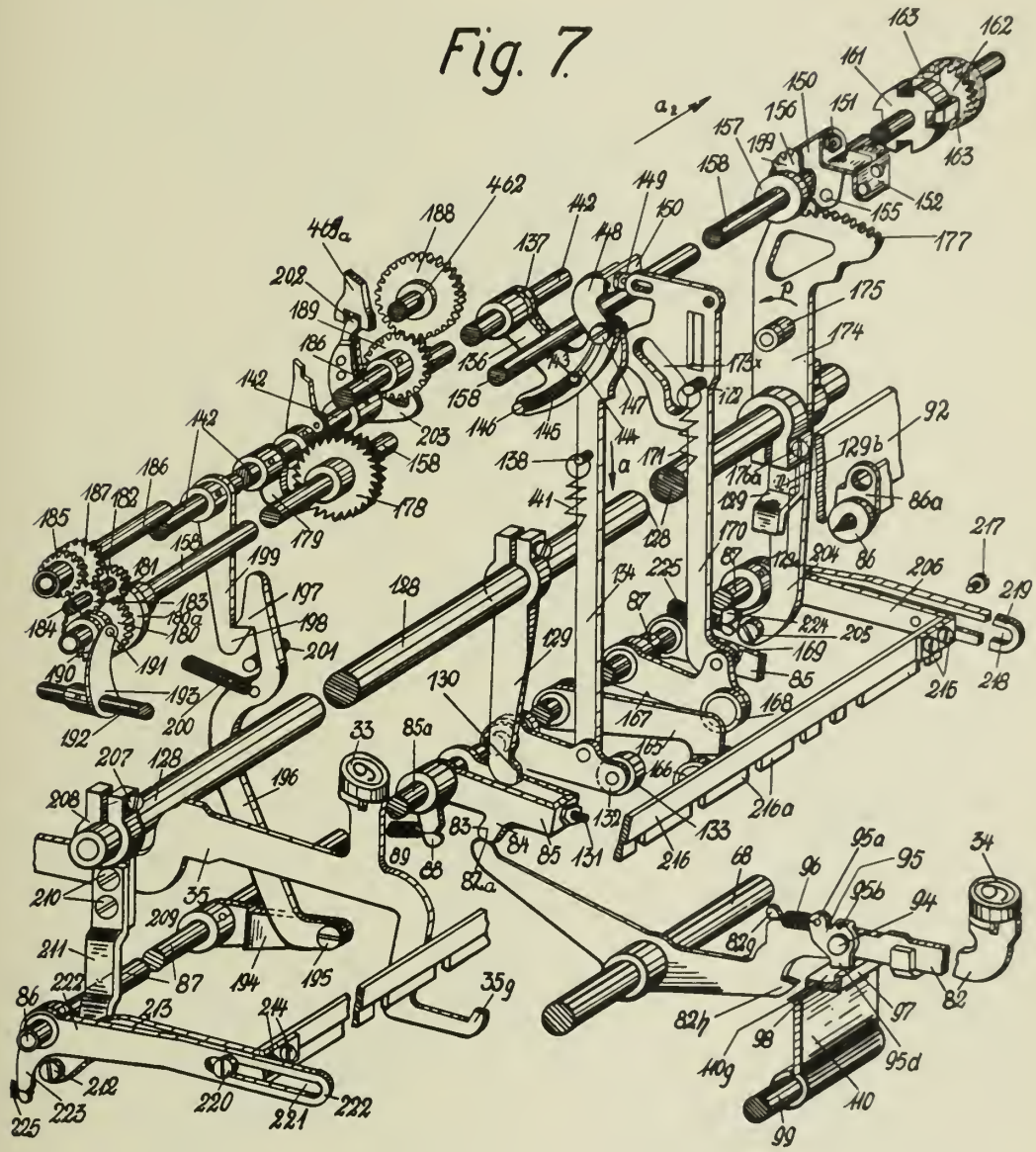

Inventor:
H. E. Kämmel
By Glascock Downing & Seebold
Attys

PUBLISHED

MAY 25, 1943.

BY A. P. C.

H. E. KÄMMEL

COUPLING DEVICE FOR TYPEWRITING CALCULATING MACHINES

Original Filed May 14, 1934

Serial No. 287,668

11 Sheets-Sheet 7

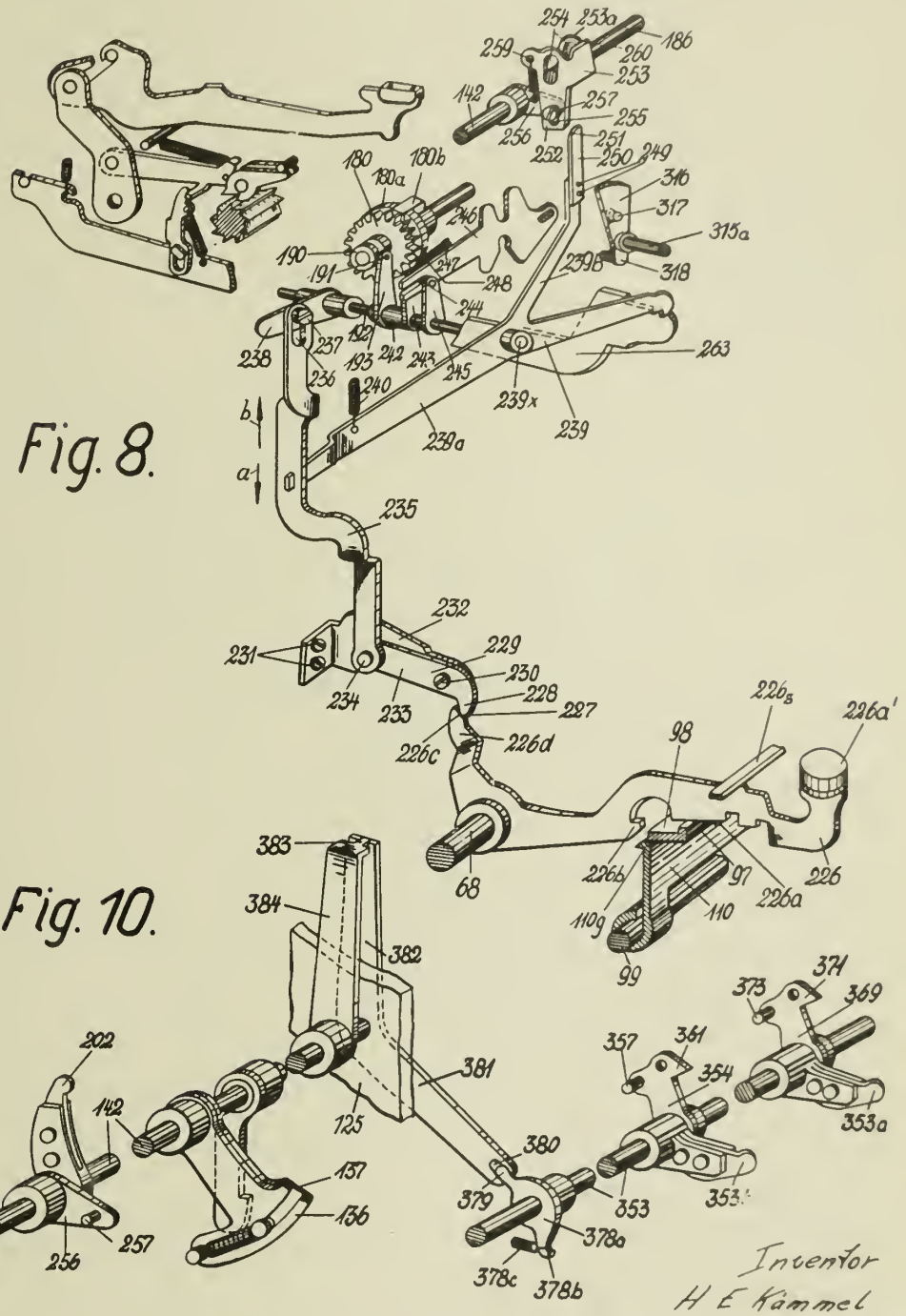

PUBLISHED

MAY 25, 1943.

BY A. P. C.

H. E. KÄMMEL
COUPLING DEVICE FOR TYPEWRITING
CALCULATING MACHINES
Original Filed May 14, 1934

Serial No.
287,668

11 Sheets-Sheet 8

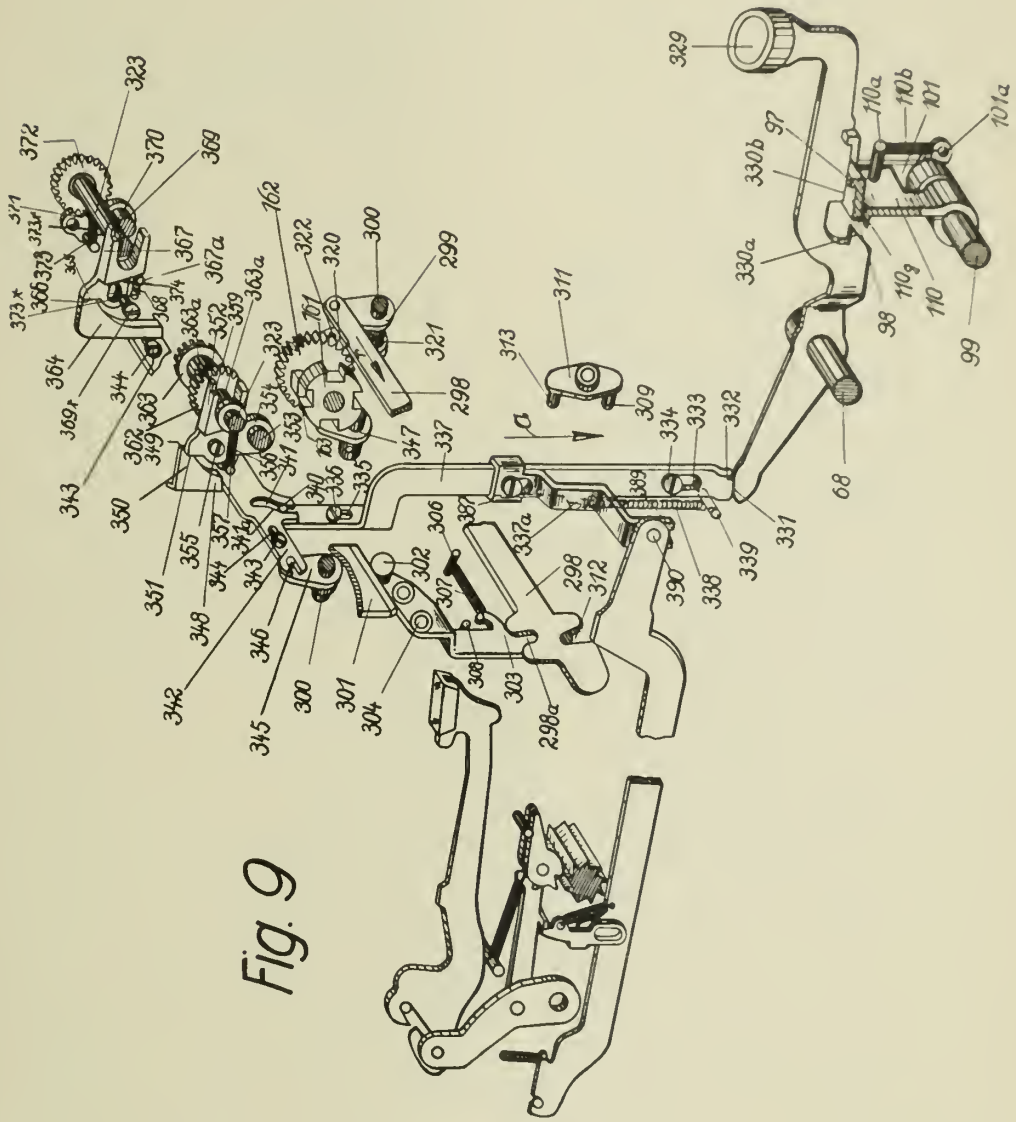

Fig. 9

Inventor
H E Kammel
By: Glascock Downing & Seebold
Attys

PUBLISHED

MAY 25, 1943.

BY A. P. C.

H. E. KÄMMEL
COUPLING DEVICE FOR TYPEWRITING
CALCULATING MACHINES
Original Filed May 14, 1934

Serial No.
287,668

11 Sheets-Sheet 9

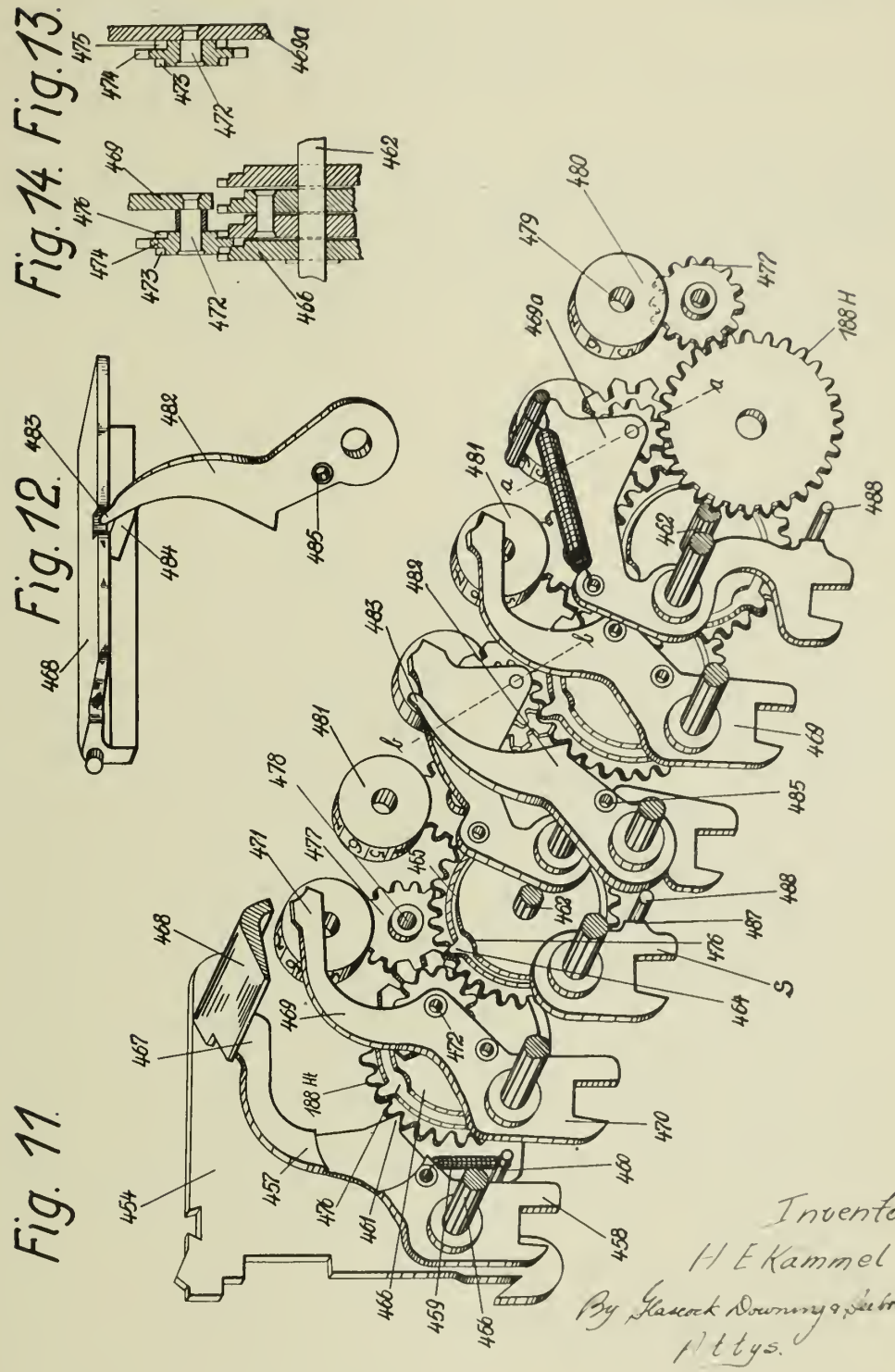

PUBLISHED
MAY 25, 1943.
BY A. P. C.

H. E. KÄMMEL
COUPLING DEVICE FOR TYPEWRITING CALCULATING MACHINES
Original Filed May 14, 1934

Serial No.
287,668
11 Sheets-Sheet 10

Fig. 15

	1	2	3	4	5	6	7	8	9	10	11
	Name	No	Month	Gross salary	Taxis	Sick fund	Assurance for employees	Supplements	Remainder	Net-salary	Sum of all supplements
I	O Schmidt	15	May	200.-	10.00	6.00	4.00	3.75	0.55	184.30 •	4.30 •

Fig. 16.

Typing line	Col.	No. Column Totalizer	Reading Column Totalizer	Type of Calc. Cross-Totlr. Q1	Type of Calc. Cross-Totlr. Q2	Reading Cross Totalizer Q1	Reading Cross Totalizer Q2	Clear sign from Cross Totalizer
I	1 to 3	Name number and month have to be registered						
I	4	T1	200.00	A	E	200.00	Zero	
I	5	T2	10.00	S	E	190.00	Zero	
I	6	T3	6.00	S	E	184.00	Zero	
I	7	T4	4.00	S	E	180.00	Zero	
I	8	T5	3.75	A	A	183.75	3.75	
I	9	T6	0.55	A	A	184.30	4.30	
I	10	T7	184.30	S	E	comes to zero	4.30	Q1
I	11	T8	4.30	E	S	Zero	comes to zero	Q2

Inventor
H E Kämmel
By Glascock Downing & Seebold
Attys.

PUBLISHED

MAY 25, 1943.

BY A. P. C.

H. E. KÄMMEL
COUPLING DEVICE FOR TYPEWRITING
CALCULATING MACHINES
Original Filed May 14, 1934

Serial No.
287,668

11 Sheets-Sheet 11

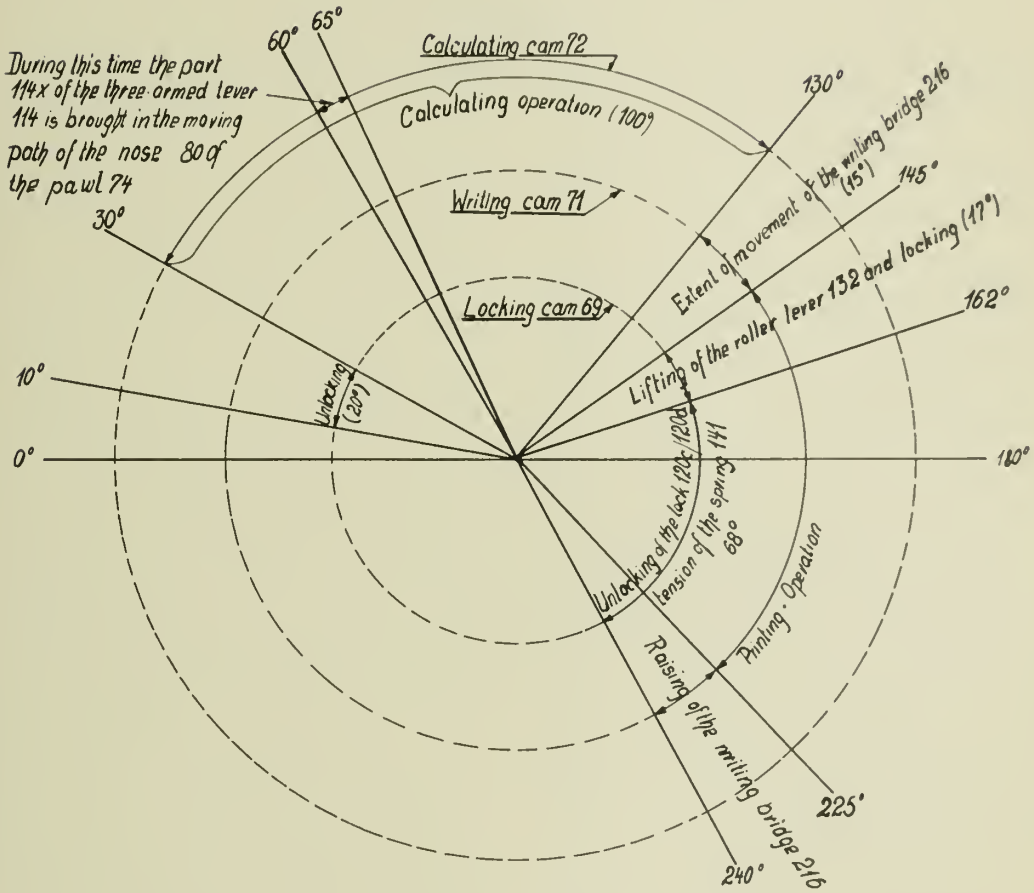

Fig. 17.

Inventor
H E Kämmel
By Glascock Downing & Seebold
Attys.

Published May 25, 1943

Serial No. 287,669

ALIEN PROPERTY CUSTODIAN

LOCKING MECHANISM FOR TYPEWRITING CALCULATING MACHINES

Hugo Ernst Kämmel, Zella-Mehlis, Germany; vested in the Alien Property Custodian

Application filed July 31, 1939

The invention relates to locking mechanism for typewriting calculating machines exemplified in my co-pending application Ser. No. 725,636 filed May 14, 1934 and of which the present application is a division.

Such locking mechanisms have previously been known. This locking mechanism had, however, the disadvantages that their whole construction was more or less complicated, since for the withdrawal of the values members are provided other than those for the registration of the values. The locking mechanism for this reason were expensive in construction and their operation was unreliable.

According to the invention these disadvantages are now obviated by providing universal locking members which are inserted between the calculating or total taking mechanisms, respectively and the number typing keys or total taking keys respectively and between the calculating or total taking mechanism, respectively and the totalizer and which control the typing calculating and total taking operations in the registration and withdrawal of the values.

In the drawings, one example of construction of the subject of the invention is illustrated as applied to a Mercedes Addelektra typewriting calculating machine.

Figure 1 shows a front elevation of the whole typewriting calculating machine.

Figure 2 shows a left-hand side elevation of the machine.

Figure 3 shows a front elevation towards the calculating members together with the calculating segment and a part of the change-over gear for the cross-totalizers, in which view the number typing keys and the letter typing keys are represented in section.

Figure 4 shows a plan of the drive frame together with the calculating keys and the drive coupling.

Figure 5 shows a perspective illustration viewed from the front left-hand side of the machine, of the drive coupling with the setting member, common to all the calculating keys, for the coupling, in which view the individual parts for the sake of better insight are represented drawn out from one another.

Figure 6 shows in perspective, details of the setting member, the parts of which are likewise drawn out from one another.

Figure 7 shows a perspective illustration of the transmission and control mechanisms arranged between the typing and calculating keys, viewed from the front left-hand side of the machine, together with the change-over gear for the column totalizers and a part of the change over gear for the cross totalizers, in which view the individual parts are illustrated drawn out from one another.

Figure 8 shows a perspective illustration of a locking mechanism controlled by the column totalizers, viewed from the front left-hand side of the machine.

Figure 9 shows a perspective illustration of the total-taking mechanism for the column totalizers viewed from the front left-hand side of the machine, together with a part of the change-over gear for the column totalizers and the printing mechanism for the sign for taking totals from the column totalizers, in which view the parts are illustrated partially drawn out from one another.

Figure 10 shows a perspective illustration of the total-taking mechanism for the cross totalizers, with the printing mechanism for the sign in addition thereto and a part of the change-over gear including both the driving wheels for the cross totalizers, the view being taken from the front left-hand side of the machine and various parts being illustrated drawn out from one another.

Figure 11 shows in perspective the change-over gear for the cross totalizers viewed from the front left-hand side of the machine.

Figure 12 shows in perspective the unlocking mechanisms for the column and cross totalizers viewed from the front left hand side of the machine.

Figure 13 shows in perspective the control, known in itself, for the coupling arranged between both the driving wheels of the cross totalizers, viewed from the front left-hand side of the machine.

Figure 14 shows a partial side elevation of the machine viewed from the left-hand side of Figure 1, in which parts of the machine housing are broken off in order to disclose the mechanisms of the total-taking arrangement for the cross-totalizers, separate parts being illustrated in section.

Figure 12 shows a perspective arrangement of a totalizer viewed from the rear, in which view the detail parts are illustrated in a condition separated from one another.

Figure 16 shows a perspective illustration of a locking lever with locking flap, viewed from the left-hand edge of the rear side of the totalizer.

Figure 17 shows a section according to the line *a—a* of Figure 15.

Figure 18 shows a section according to the line *b—b* of Figure 15.

Figure 19 shows a cross-section through one of the usual totalizers as hitherto used, in which view for the sake of better apprehension, the individual wheels, with their shafts, are dispcsed in one place.

Figure 20 shows a similar illustration to Figure 19, of a totalizer slightly modified for the present invention wherein the modification in spite of its apparent insignificance is nevertheless of importance.

Figure 21 shows a detail.

Figure 22 shows a partially illustrated sheet, filled in with an example of calculation which is to find application later in the explanation of the manner of operation.

Figure 23 shows in the form of a table the shift procedure of the kind of calculation for the cross totalizers according to the example of calculation illustrated in Figure 22.

Figure 24 is an operation time diagram.

The machine housing **1** (Figures 1 and 2) carries by means of rails **2** and **3** the paper carriage **4**, in which a platen **5** (Figure 2) is arranged. To the front side of the paper carriage, there is fixed a supporting rail **7**, for carrying the column totalizers T, which will be hereinafter described in detail.

To the right-hand side of the paper carriage **4**, the carriage release lever **8** (Figure 2) is swingably mounted, and to an extension of this lever a carriage release bar **9**, is fixed. This bar is rigidly connected at its other side with a lever **10**, which is swingably mounted on the left hand side of the paper carriage, on a screw **11**.

The carriage release lever **8**, release bar **9** and lever **10** form part of mechanism for releasing the usual carriage escapement mechanism in the usual manner which mechanisms being well known in the art have not been illustrated in detail and need not be further described.

For the purpose of the mechanical line-shift and for the return of the paper carriage there is, further, on the carriage **4**, a rack **12** (Figures 1 and 2) which is displaceably mounted by screws **12*b*** engaging with the slots **12*a***. With the rack **12**, engages a toothed wheel **13**, which is pinned on a shaft **14**. This shaft is mounted in a stationary bearing **15**, and carries a rigidly mounted bevel wheel **16** on its end, remote from the toothed wheel **13**. With the bevel wheel **16**, engages a bevel wheel **17** (Figure 1) which is fixed on a shaft **18**. The shaft **18** is rotatably mounted in a bearing **19**, rigidly connected to the machine frame, and on its other end is provided with a spur wheel **20**, which, on its part, engages with a spur wheel **21**, which is rotatably mounted on a shaft **23**, arranged in the bearing **22**. The spur wheel **21**, again, is in engagement with the spur wheel **25**, which is rotatably mounted on the shaft **24**, the spur wheel **25**, on its part meshing with a spur wheel **26**, formed as part of a coupling **26*a***. The wheel **26**, is loosely rotatable and axially displaceable on a part **27** (Figure 1) of a cam shaft C (Figure 2) which drives the type levers. On the part **27**, further, a second coupling half **27*a*** is fixed which is formed similarly to the spur wheel **28**, but is not axially displaceable. The shaft **27**, is rotated in the direction on the arrow *a* (Figure 2) by means of a screw **29** (Figures 1 and 2), and a worm wheel **30**, driven by a motor M which is arranged on the right-hand side of the machine.

The line shift and the carriage return is effected by bringing the coupling half **26** engagement with the coupling half **27*a***, by of a lever **31**, which is operated by the righ margin stop M*r* (Figure 1). Such enga of said halves and operation of said lever erates the hereinbefore described wheel d to **26**, and the rack **12**, to effect line spa the platen **5** and the return of the carriage right in a manner and by associated mear described in U. S. Patent No. 1,582,788 to attention is directed. The opening of th pling **26**, **28** is effected by the left-hand stop M**1**, as the paper carriage **4** runs i extreme right-hand position to uncoupl halves **26** and **28**. The typewriter mech proper comprises letter keys **32**, number and calculating keys **34** (Figs. 1, 2 and 7) ed upon key levers **36**, **35** and **82**, respe movable downwardly around pivot **37** agai action of springs **38**. The calculating keys indirectly on the number key levers **3** manner and by means hereinafter describ der the heading operation of the calc mechanism and operation of the automatic ing mechanism. By means of a pin, **40**, ing pawl **41**, is mounted on each key lev **36**, and this pawl is so acted upon by the spring **42**, that its lug, **43** rests against **44**, of a key lever, **35**, **36**. The nose **45**, driving pawl, **41**, engages over a nose **46**, draw hook **49**, jointed to the intermediat **47**, by a pin **48**, and the draw-hook is acte continually round its pin **48** in the anti-clo direction by means of a tension spring, presses upwards against a stop **51**, wher normal position is determined.

On the draw-hook **49**, the control too provided with two teeth **49*a*** and **49*b***, is ro mounted on the pin **49*d***. If one of the keys, **35** or **36** is depressed, the associated tooth **49*c*** moves into engagement with th shaft C, as described in the patent to Schul 1,789,661, dated Jan. 20, 1931. The contro **49*c*** is first of all rotated slightly and the the draw-hook **49** along with it to the ri that the intermediate lever **47** is swung the shaft **52**, in the clockwise directior cordingly, the type lever, **54**, is swung in th clockwise direction round the shaft **55**, and against the platen **5**.

The spur wheel **28** (Figures 1 and 2) w non-rotatably mounted on the shaft **27** 1) engages with a spur wheel **56**, which is mounted on the shaft **57**. The spur wh again is in engagement with the spur wh rigidly mounted on the shaft **58** (Figures 5, and 14).

The above described mechanisms do not to the invention but have been briefly de for the better understanding of the parts hereinafter described belonging to the inv

The calculating mechanism drive sh (Figures 2, 4, 5), on one hand, is ro mounted in the bearing eye **60**, arranged right hand side of the machine housing on the other hand, the part **58*a***, of the sh is rotatably mounted in a bearing **61**, wh fixed by means of the screws **62**, to a bri connecting the two side walls, **64** and **65** other shaft **63** (Figures 2, 4, 5, 7, 8, 9, 10, rigidly mounted by means of set scre screwed into bosses **66** (Figure 4) on the le right hand side walls **64** and **65** of the m housing **1**, and on this shaft, members to be inafter described, are swingably mounted.

In the bearing eye 61, (Figures 2 and 5), a cam, 69, (Figures 2, 4, 5) is rotatably mounted by means of the sleeve, 69*a*, rigidly fixed to the cam. The cam 69, is rigidly connected to the cams 71 and 72, by means of screws (not illustrated) which pass through holes 70, of the cams. The shaft, 58, however, remains without any action on the cams, since the cams 69, 71 and 72, as well as the sleeve, 69*a*, have greater bores *y* (Fig. 5) than the diameter of the shaft, 58. The cams, 69, 71 and 72 are prevented from lateral displacement, on the one hand, by contact of the side 69*b*, of the cam 69, with the edge 61*a*, of the bearing eye, 61, and on the other hand, by contact of the cam, 72, with the toothed wheel, 73, non-rotatably mounted on the square shaft, 53. The toothed wheel, 73, participates in the rotation of the square shaft, 58, which continually rotates in the arrow direction *b* (Fig. 5). On the cam, 72, a pawl, 74 (Figures 4, 5) is displaceably arranged by means of pins, 77 and 78, which engage in elongated slots 75 of the cam 72, in elongated slots 76, of the cam 71, and in elongated slots, (not illustrated) in the cam 69. The pawl 74, is acted on continually in the direction of the arrow *c* (Figure 5) by a compression spring 79, which, on the one hand, abuts against the pin 78, fixed to the pawl 74, and, on the other hand, abuts against the face 72*a*, of the slot 75, in the cam 72. Moreover, a stud, 80 formed on the pawl 74, co-acts with a part, to be hereinafter described in detail, by means of which the tooth 74*a*, of the pawl 74, is held out of engagement with the toothed wheel 73. In ring grooves (not illustrated) in the ends of the pins 77 and 78 of the pawl 74, which project from the left-hand side of the cam 69, a locking member 81, is fixed, in the manner illustrated in Figure 5, so that the pawl 74, always remains in connection with the cams 69, 71 and 72, and the pawl 74 is prevented from falling out. It may be remarked at this point that for the whole ten calculating keys 34, only one coupling as just described, is necessary.

The ten calculating key levers 82 (Figures 1, 2, 4, 5, 7) which carry the calculating keys 34, are swingably mounted on the shaft 68, already mentioned. The rearwardly directed limbs of the calculating key levers 82, are somewhat upwardly bent at their ends, and have arched surfaces 83 (Figure 7) of the downwardly directed projections 84, of the U-shaped stop members 85. The latter are swingably mounted on a shaft 87, (Figures 2, 3 and 7) which is rotatably mounted by means of two set screws 86 (Figures 3 and 7). Each of the set screws, 86, is screwed into a corresponding angle member (Figure 3) the angle members being fixed by means of screws 86*b* to both side members 86*c* of the cradle housing. The stop members, 85, moreover, are held in position in the axial direction by means of distance pieces 85*b* (Figure 3), arranged on the shaft 87.

On the left-hand limbs of the stop members 85, which correspond to the values "1" and "9", and on the right-hand limbs of the stop members 85 (Figure 3) which correspond to the values "2" to "8", projections 88, (Figures 2, 3 and 7) are arranged, with which engage springs 89, the springs on the other hand being connected to pins 90, (Figure 2). The pins 90, are riveted into angle members 91 (Figure 2) which, again are screwed by means of screws 91*a*, to a bar, 92, (Figures 2 and 7) attached to the two side walls of the machine frame in any suitable manner. By means of these springs, 89, the stop pieces 85, are acted on in the clockwise direction round the shaft 87, so that they rest with their faces 85*a*, (Figure 2) against the bar 92, whereby the normal position of these stop members 85, is determined. Since the calculating key levers, 82, are acted upon by their own weight in the clockwise direction round their pivot shaft 68, and consequently rest with their arched faces 82*a*, against the arched faces 83, of the stop members, so the normal position of the calculating key levers 82, is hereby determined. A depression simultaneously of two calculating keys 34, or of a calculating key 34 and a decimal tabulator key 93 (Figure 1) is rendered impossible by the generally known roller key lock of the Mercedes-Addelektra-machine, (not illustrated).

On each calculating key lever 82, a pawl, 95 is swingably mounted by means of a rivet 94 (Figures 2, 5 and 7). With the nose 95*a* of this pawl, a spring 96, engages which, on the other hand, is connected to a nose 82*g*, arranged on the key lever 82. By means of this spring 96, the pawl 95, is acted on in the anti-clockwise direction round its rivet 94. The normal position of the pawl 95, is determined by the contact of the right-angled bent nose 95*b*, on the upper edge of the key lever 82. The downwardly directed end 95*d* of the pawl 95, is capable of co-acting with the right-angled upwardly-bent nose 97, of a bar 98. On the right and left hand ends of the bar 98, pins 98*a* (Figures 5 and 6) are formed, one pin being arranged at each end. By means of these pins, the bar 98, is swingably mounted on the levers 100 and 101, rigidly mounted on both ends of the shaft 99. The shaft, 99, at its right hand side, is rotatably mounted by means of a set screw 102 (Figure 5) in a bearing member 103, which is fixed to a bar 105, by means of screws 104. On the left-hand side of the machine, the shaft 99, is rotatably mounted by means of a one bearing 106 (Figure 6) in a bearing member 107, which is fixed with screws 108, to the bar 105, already mentioned. The bar 105 is fixed to both side walls 64 and 65 of the machine housing 1, by means of screws 105*s* (Figure 4) which pass through holes 105*a* and 105*b* (Figures 5 and 6) of the bar 105.

By means of a spring 109, which, on the one hand, engages with a lug 98*b* of the bar 98, and, on the other hand, is connected to a pin 99*a* (Figure 3) rigidly fixed to the shaft 99, the bar 98, is acted on in the anti-clockwise direction round its pins 98*a*, so that its upper surface presses upwards against a bent lug 103*a* on the bearing block 103, whereby the normal position of the bar 98, is determined.

A locking bar 110 (Figures 2, 5, 6) is swingably mounted at both its ends on the shaft 99, in the manner indicated in Figures 5 and 6. At the right-hand and left-hand ends of the locking bar 110, further, pins 110*a* are fixed, with each of which a spring 110*b* (in Figure 5 this has not been illustrated for the purpose of rendering other parts visible), engages, which spring, on the other hand, is connected to bent lugs 100*a* of 101*a* of the levers 100 and 101. By means of these springs 110*b* the locking bar is always acted upon round the shaft 99 in the clockwise direction, whereby its normal position is determined, on the one hand, by contact with the pin 100*b*, riveted to the lever 100 and, on the other hand, by contact with the pin 101*b* riveted to the lever 101. The right-angled limb 110*g*, is capable of co-acting with the noses, 82*h* (Figure 5) formed on the calculating key levers 82, in a manner to be hereinafter described.

On the shaft 99 (Figures 2, 5, 6) further, a lever 111 is rigidly mounted to the frce end of which a pin 112 is riveted (in Figure 5 for the sake of illustration the same is indicated in the withdrawn position). The pin 112 of the lever 111, co-acts with the fork-shaped end of an arm 113, of a three-armed lever 114, which is swingably mounted on the shaft 68. The arm 114*a* of the three-armed lever 114, co-acts with the stud 89, already mentioncd, of the pawl 74, while the arm 114*b*, of the samc, co-acts with the cam 72, in a manner hereinafter described. A spring 115 engages with a pin 114*f* (in Figure 5, the pin 114*f* is shown removed from the lever 114 for purposes of illustration) riveted to the nose 114*d* (Figure 5), the spring at its other end being connected to a pin 115*a* (Figure 4) on a stay 115*b*, which is fixed to the part 63 and to the cross stay 105. By means of this spring, the three-armed lever 114, is acted on in the clockwise direction round the shaft 68, in consequence of which the lever 111 connected to it, the shaft 99, and the levers 100 and 101 pinned to it, the locking flap 110, and finally the bar 98, are acted upon in the anti-clockwise direction, whereby on the one hand, the upper face of the lug 98*x*, under the action of the spring 109, and on the other hand, its edge, 98*s* under the action of the spring 115, contacts with the edge 103*a* of the lug 103*a*, of the bearing member 103, whereby the normal position of the parts 114, 111, 99, 109, 101, 110 and 98, is determined.

Further, on the shaft 68, a lever 116 (Figures 2, 5) is swingably mounted, at the free end of which a roller 117 is arranged, which is capable of co-acting with the cam 69. By means of the spring 119 which, on the one hand, engages with the pin, 118 of the lever 116, and on the other hand, is connected to the part 63, the roller 117, is always maintained in contact with the cam 69.

The lever 120, which similarly is swingably mounted on the shaft 68, is likewise capable of co-acting by means of its rearwardly directed arm, 120*a* (Figure 6) which the cam 69. By means of the spring 123, which, on the one hand, engages with the pin 121 and, on the other hand, is connected to a pin 122 (Figure 3) of the bridge 105, the lever 120, is acted on in the clockwise direction round the shaft 63, whereby the projection 120*b* of this lever contacts with a part 120*c*, fixed to the locking bar 110, and the normal position of the lever is thereby determined.

By means of the set screws 127, screwed into the two side walls 125 (Figure 3) of the calculating mechanism 126 (Figures 1, 2, 3 and 7) a shaft 128 is freely rotatably. To this shaft, 128, feeler fingers 129, are mounted so as to be capable of being adjusted and fixed in position, and these fingers are forwardly bent at right angles at their downwardly-directed cnds and are capable of co-acting by means of their slightly arched faces 130, with the stop pins 131 (as best shown in Figure 7) arranged on the stop members 85. The stop pins 131, are mounted so as to be adjustable. The right-angled forwardly-bent parts of the feeler fingers 129, are formed of different lengths (Fig. 2) to correspond to the values "1" to "9," and the right-angled bent part, corresponding to the value "1" of the feeler finger 129, lying farthest to the left (Figure 3) is the longest, and the right-angled bent part corresponding to the value "9" of the feeler finger 129, which is located on the shaft 128 at the right hand side of the machine to the left of the feeler finger 129 corresponding to th "0," is the shortest.

The feeler finger 129, corresponding value "0," is arranged so as to be capable ing fixed by means of screws 129*b* (Figure 7) to a part, hereinafter described in detai to the projection 129*c* of a clamping r 129*d*. As the feeler finger 129, correspon the value "0" may not be allowed to execu swinging movement, calculating sector 174 be swung therewith and in this manner a value would be registered in one of the angled bent part of the feeler finger 129 4) corresponding to the value "0" is still than the right-angled bent part of the finger 129, corresponding to the value "

On the shaft 87 (Figure 8) a lever 87*a* is which is capable of co-acting by means nose 87*b*, with the lug 87*c* of a lever 87*d* lever 87*d*, is capable of being swung round 87*e* mounted on a supporting member 87*f* is screwed fast to the bar 105, and wh means of its fork-shaped part 87*f'*, embra shaft 68, and thus supports the same. lever, 87*d* an arm 87*d'* is bent in the for U, to the upwardly projecting lug of which 87*i*, guided by means of a screw-slot con 87*g*, 87*h*, is attached. This bar feels a p by means of its setting piece 87*j*. The scr of the screw-slot connection is moreover, s to a support 87*m* fixed to the cross-bridg the machine housing. The said pin 87*k* eted to a bar 87*n*, which is guided in th wall 139, of the calculating mechanism by of a screw-slot connection 87*o*, 87*p*. At it end, the bar 87*n*, is jointed to a lever 87*r* able on the screw 87*q*, (Figure 8). This, co-acts with a lever 87*s*, rotatably moun the shaft 136 (Figure 7) which lever, capable by means of its nose 87*s'* of feel bars 87*t*, arranged on the column totalizer T8.

The lever, 87*s*, moreover, co-acts with a lever 87*u*, mounted on the shaft 142, whic ing lever is connected with the lever 87 spring 87*v*. If no bar 87*t*, of a column t lies over the nose 87*s'* of the lever 87*s*, o nose 87*s'* lies in the intermediate space two bars 87*t*, so the nose 87*s''* of the le lies in the stop 87*i'* of the lever 87*u* un action of the spring 87*v*, whereby the res tion of the lever 87*s* is determined. If th 87*s* is in the rest position, the lever 87*r* is in the clockwise direction around the scr under the action of the spring 87*w*, whi gages with the bar 87*n*. Hereby the le lies against the nose 87*s'* of the lever 87*s* w the rest position of the parts 87*r* and 87*s* is mined. In this case, also, the lever 87*d* is by way of the bar 87*i*, in the anticlockwise tion against the action of the spring 87*x* engages with the lever 87*d*, and which is in comparison to the spring 87*w*, whereby 87*c* of the lever 87*d*, moves in front of th 87*b*, of the lever 87*a* and prevents the le swinging in the clockwise direction. Si the nose 87*d''* of the lever 87*d* moves beh edge 98' of the hook 98'' of the bar 98, w a swinging of the bar flap 98 in the anti wise direction, is prevented.

A roller lever 132, is loosely rotatabl shaft 87 (Figures 5 and 7) and on the fr wardly-directed end of this lever, a roller mounted, which is capable of co-acting w cam, 69, hereinbefore described. To the

lever 132, is jointed a draw-bar 134 which, at its upwardly directed free end, is jointed by means of a screw 135 (Figures 2, 3 and 7) to the lever 137, which is loosely rotatable on the locking shaft 142. By means of a spring 141, which, on the one hand, engages with the pin 138, rigidly mounted on the draw-bar and, on the other hand, is connected to a pin 140, rigidly mounted on the front wall 139 (Figures 2 and 5) of the calculating mechanism 126, the draw-bar 134, is acted upon always in the direction of the arrow *a* (Figures 5 and 7), so that the roller 133 is always maintained in contact with the cam 69.

The locking shaft 142, is arranged so as to be loosely rotatable by means of set screws (not illustrated) on the two side walls 125 of the calculating mechanism 126. To the lever 137, a pin 143, is fixed, which projects through an elongated hole 144, of a lever 136, rigidly mounted on the locking shaft 142. A spring 145, engages with the pin 143, of the lever 137, the other free end of the spring being connected to a pin 146, fixed to the lever 136, whereby both levers 136 and 137 are yieldingly connected to one another.

To the lever 136, a connecting member 148, is jointed by means of a screw 147, and this member is jointed to an angle lever 150 (Figures 3, 7) by means of a screw 149. The lever 150, again, is swingably mounted by means of a screw 151, on an angle member 152, which is fixed by means of screws 153 (Figure 3) to the front wall 154. To the angle lever 150 (Figure 7) is fixed a pin 155, which projects into a ring groove 156, of a sleeve 157, and this sleeve is arranged so as to be axially displaceable on a shaft 158, mounted in any suitable manner in the two side walls 125, of the calculating mechanism 126. With the sleeve 157, a wheel 159, likewise mounted so as to be axially displaceable on the shaft 158, is in fixed connection. Pins 160 (Figure 3) are arranged on the toothed wheel 159, and these pins are always in engagement with a claw 161 (Figures 3 and 7) rigidly mounted on the shaft 158. Further, on the shaft 158, is arranged a toothed wheel 162, the pins 163 of which are likewise in engagement with the claw 161 (Figures 3, 7, 10). The toothed wheel 162, is rigidly connected to a ring grooved sleeve 164 (Figure 3) which is arranged so as to be axially displaceable on the shaft 158.

On the shaft 87 (Figures 3, 5 and 7) there is rigidly mounted a lever 165, on the free downwardly projecting end (Figure 5) of which a roller 166, is arranged, and this roller is capable of co-acting with the cam 71, hereinbefore described. The lever, 165, is, moreover, fixed on the shaft 87, in such a manner that its roller 166, is normally in contact with the cam 71.

Besides, on the shaft 87 (Figures 3, 5, 7) a lever 167, is arranged, so as to be loosely rotatable thereon. To the lever 167 a roller 168, is attached, so as to be rotatable, and this roller is capable of co-acting with the cam 72, hereinbefore described, in a manner to be hereinafter described in detail. To the lever 167, a slide 170, is jointed by means of a headed screw, 169. By means of a spring 171, which, on one hand, is connected to a pin 172, arranged on the slide 170 and, on the other hand, engages with a pin 173 (Figure 3) arranged on the front side of the calculating mechanism, the slide 170 is always acted upon downwards in the arrow direction *a*, whereby the roller 168 of the lever 167, is always held in contact with the cam 72. The slide 170 is provided with an elongated hole 173, formed correspondingly to that in Figure 9 into which hole projects a roller 175 mounted on the calculating sector 174. The calculating sector 174 is arranged so as to be capable of adjustment and of being fixed in position on the shaft 128, by means of a screw 176*a*. The upwardly directed part of the calculating sector 174, is provided with teeth 177, with which the main driving wheel 159, hereinbefore described, is capable of being moved into engagement. The toothed sector 174 (Figures 2, 3, 7) which is actuated on striking a calculating key 34, in a manner to be hereinafter described, transmits the swinging movement corresponding to the value of the struck key, by way of the toothed wheel 159, and shaft 158, to a locking wheel 178 (Figure 7) rigidly mounted on the shaft 158, which locking wheel is always in engagement with a guide and locking tooth 179. Further, on the shaft 158, a toothed wheel 180 is mounted so as to be capable of axial displacement. This is normally in engagement with a toothed wheel, 181, which is integrally formed with a hollow shaft 182, and a toothed wheel 183. The unit 181, 182 and 183 is rotatably mounted on a shaft 184, fixed in the left-hand wall 125 (Figure 3) of the calculating mechanism. The toothed wheel, 183, again, is in engagement with a toothed wheel 185, which is rigidly mounted on a shaft 186. The shaft 186, is rotatably mounted in the left-hand side wall 125 of the calculating mechanism and in a bearing member (not illustrated) arranged approximately at the centre.

Beside the toothed wheel 185, there is a further toothed wheel 187, mounted so as to be non-rotatable on the shaft 186. Further, on the shaft 186, a master wheel 189 (Figure 7) is rigidly mounted, which comes into engagement with the toothed wheels 183, (Figures 2 and 16) of the column totalizers T in the working position.

On the wheel 180, a ring grooved sleeve 190 is rigidly mounted, into which projects a pin 191, of a lever 193, rigidly mounted on the shaft 192, which is rotatably mounted in the calculating mechanism. The driving of the toothed wheel 180 (Figures 7 and 9) on a rotational movement of the shaft 158, is effected by a coupling disc 180*a*, pinned to the shaft 158, into which disc engage claws 180*b*, rigidly connected with the toothed wheel 180.

On the shaft 87 (Figures 2 and 7) there is rigidly mounted a lever 194, to the free upwardly directed end of which, a draw-bar 196, is jointed by means of the screw 195. A nose 197, of the draw-bar 196, engages over a nose 198, of a lever 199, rigidly mounted on the shaft 142. By means of a spring 200 which engages with the draw-bar 196, and which on the other hand is connected in the calculating mechanism in any suitable manner, the lever 196, is normally swung about the screw 195, in the anticlockwise direction, whereby the lever 196 is normally positioned so that its nose 197, always remains in engagement with the nose 198, of the lever 199. The lever, 196, rests against a pin 201, arranged in any suitable manner in the calculating mechanism.

On the shaft 142 (Figures 2, 7) there is fixed a release finger 202 which is capable of acting on a locking lever 461, arranged in the totalizers T1 to T8 in a manner to be hereinafter described. Further, on the shaft 142, there is a locking tooth 203, rigidly mounted, which is capable of co-acting with the main driving wheel 189, rigidly mounted on the shaft 186.

On the clamp 129*d* (Figures 3 and 7), as already hereinbefore described, a member 204, is

also mounted by means of screws 129*b*, and to the free downwardly projecting part of the member 204, which is somewhat bent at the rear, a member 206 is jointed by means of a screw 205. On the left-hand side of the machine, a clamp 208, is arranged so as to be capable of adjustment and to be clamped in position by means of a screw 207. To the projection, 209 of the clamp 208, a part 211, correspondingly formed to that in Figure 9 is fixed by means of screws 210, and to the free downwardly projecting end of the part 211, there is attached a part 213, by means of a screw 212. A bar 216, correspondingly formed to that in Figure 7, is fixed to the part 213, by means of screws 214, and to the part 206, located at the right hand side of the machine by means of screws 215, so that a frame consisting of the parts 208, 211, 213, 216, 206, 204 and 129*d*, is formed.

The part 206 (Figure 7) located on the right-hand side of the machine, moreover, is guided by means of a headed screw 217, which projects through an elongated slot 218 of a lever 219, rigidly mounted on the shaft 87, and the part 213, arranged on the left-hand side of the machine of the frame, is guided by means of a headed screw 220, which projects through an elongated slot 221, of a lever 222, rigidly mounted on the shaft 87, so that the frame 213, 216, 206 is prevented from swinging downwardly round the screws 212 and 205. With the arm 223 of the lever 222, and with the arm 224 of the lever 219, engage springs, 225, one spring with each arm, which springs are connected at their free ends in any suitable manner in the machine housing, and these springs act upon the levers 222 and 219, and consequently upon the frame 213, 216, 206 in the clockwise direction. The swinging movement in the clockwise direction, however, is normally prevented by the draw-bar 196, the nose 197 of which engages over the nose 198 of the lever 199. The bar 216 of the frame 213, 216, 206, in a manner to be described later, is capable of co-acting with the noses 35*g* formed on the downwardly and forwardly extending number key levers 35 (Figure 3). Moreover the noses 35*g* are arranged on horizontal parts 35*h* of different lengths of the number key levers 35, the lengths of these parts corresponding to their values "0" to "9", and the horizontal part 35*h* corresponding to the value "0" (Figure 3) is formed as the shortest and the horizontal part corresponding to the value "9" as the longest.

On the left-hand side of the machine is arranged the total key indicated by TV (Figure 9) for taking the total of the column totalizers T. The key 226*a'* is attached to the key lever 226 (Figure 9), which is swingably mounted on the shaft 68. On the key lever, 226 there is no pawl 95, mounted, as in the case of the calculating key levers 85 (Figure 7), in which the downwardly directed part of the pawl acts on the bar 97, but the key lever 226 (Figure 9) is provided with a wide projection 226*a*, which is capable of acting on the bar 97, 98 in the manner to be later described. The nose 226*b* of the key lever 226 is capable of co-acting with the nose 110*g* of the part 110. The rearwardly and somewhat upwardly projecting arm 226*d* of the key lever 226, is capable of acting with its somewhat arched face 226*c* on the somewhat arched face 227 on an arm 228 of a two-armed lever 229. The two-armed lever 229 is swingably mounted by means of a headed screw 230 on a supporting member 232, which is mounted by means of screws 231, in suitable manner on the ma housing. To the free rearwardly directe 233, of the two-armed lever 229, a draw-ba formed correspondingly to that in Figure jointed by means of a screw 234, which dra is provided with an elongated hole 236, free upwardly directed end. Through thi a screw 237 projects, which is screwed i lever 238, fixed on the shaft 192, wherei draw-bar 235 is held loosely in connectio the lever 233. The draw-bar 235, is conn in the manner illustrated in Figure 9, w three-armed lever 239, which is swingably m ed in a suitable manner at 239*x* on the rea of the calculating mechanism 126. With th 239*a* of the three-armed lever 239, a spri engages, which at its other free end is con to a pin mounted in the calculating mecha but not illustrated. In consequence of th tion of the spring, 240, the draw-bar 235 is on in the direction of the arrow *b*, where normal position is determined by striking key lever 226 against a stop 226*s* arrang the machine housing.

On the shaft 192 (Figure 10) mounted front wall 154, and in the back wall 241 ure 3) of the calculating mechanism 12 swingable lever 193, (Figure 9) already des is rigidly mounted, and is rigidly connect means of a sleeve 242, with the lever 243, is likewise swingable with the shaft 192. lever 243, again, is connected by means of 244, with the lever 245, which is swingably m ed on the shaft 192. The pin 244 is emb by a fork-shaped end of a control lever 246 ure 9). With the pin 244, a spring 248 en which is connected to the pin 247, mount the control lever 246, whereby the control 246 is acted on towards the left and the 245, 243 towards the right, so that the san always held in contact with the control lev

To the upwardly directed arm 239*b* (Fig of the three-armed lever 239, a part 250 is by means of two screws 249, the angle 251 part 250 being somewhat inclined. The pa is capable of co-acting with a downward rected part 252 of a locking and aligning 253 (Figure 10). The locking and aligning 253 is, as is evident from Figure 9, of U-sha

An elongated hole 254 is provided in ea the limbs 252 and 253*a*, and through these rejects the shaft 186 already described. In elongated hole, 255, arranged in the part the locking and aligning tooth 253, and spondingly formed to that in Figure 9, ther jects a pin 257, rigidly mounted on the lev The lever 256, (Figures 7, 9, 12) is rigidly m ed on the shaft 142, hereinbefore describe

A spring 258 on the one hand, engages a lug 259, of the locking and aligning too and, on the other hand, is connected to the 256. The locking and aligning tooth 253 is tioned in its normal position with the edge of its elongated hole 254, resting against the 186 and the edge 255*a* of the elongated 255, against the pin 257 of the lever 256 the bridge connecting the two limbs 252 and of the locking and aligning tooth 253, a like projection 260, is formed, which is ca of engaging in the tooth spaces of the to wheels 183, arranged in the column totaliz

On the supporting rail 7 (Figures 1, 2) paper carriage 4, as already stated, the co totalizers T are removaly mounted. On th umn totalizers T, pre-setting plates 301 (F

1, 10) are mounted by means of which the control of the type of calculation of the associated column totalizer located in the working position is effected for addition or subtracting. The presetting plate 301 of one of the column totalizers (Fig. 1) which is directly in the working position, moreover, acts on a part 302 (Figure 10) of an angle lever 303, which is mounted, by means of a screw 304, on the front wall 154, of the calculating mechanism 126. By means of a spring 307, which engages with the lever 303, and is connected to a pin 306, fixed in the front wall 154 of the calculating mechanism 126, the parts 303 and 293, are held in their normal position, the normal position being determined by striking on a pin 308, arranged in the front wall 154 of the calculating mechanism. The lever 303 (Figure 10) is of fork-shape at its lower end and embraces with the same a pin 309, of a control lever 311, swingably mounted, by means of a screw (not illustrated) on the front wall 154 of the calculating mechanism 126. While the pin 309 is capable of co-acting with the V-shaped recess 312 of the control lever 298, the pin 313, fixed to the control lever 311, co-acts with the upwardly directed V-shaped recess 298*a*, but the pin 313, on its part is in no way connected with the angle lever 303.

On the front wall 154, of the calculating mechanism 126, is arranged a knob 315 (Figure 1) which is capable of being set on "Add," "Subtr." or "Disc.", corresponding respectively with "Addition," "Subtraction" and "Disconnected" and this knob is rigidly connected to the lever 316 at 315*a* (Figure 9). On the control member, 316, pins 317, 318 are arranged, which co-act with the control lever 246.

On the left-hand side of the calculating mechanism 126 (Figure 1) is mounted the known cancelling key lever 319, which will not be further described at this point.

Further, on a shaft 300, which is mounted in bearings in the front wall 154 and in the rear wall 241 of the calculating mechanism 126 (Figures 10 and 3) there is mounted a lever 320, which is rigidly connected to the lever 299, by means of a sleeve 321 (Figure 10). A pin 322, arranged on the lever 320, engages in a ring groove 164*a* (Figure 3) of a sleeve 164, rigidly mounted on the toothed wheel 162. The toothed wheel 162, if the cross totalizers Q1 and Q2 operate in the additive sense, is in engagement with the toothed wheel 324 (Figure 11) rigidly mounted on the shaft 323, which is rotatably mounted in the calculating mechanism 126. Further, on the shaft 323, there is arranged a toothed wheel 325, which is in fixed relation to the toothed wheel 324, by means of a sleeve 326. The toothed wheel 325, again is in engagement with an intermediate wheel 328 rotatably mounted on the pin 327. The pin 327 is rigidly mounted on the right-hand side wall 125, of the calculating mechanism 126. As will be evident from Figure 11, the toothed wheel 162, can be moved sometimes into engagement with the toothed wheel 324 and at other times with the intermediate wheel 328.

On the right-hand side of the machine, the key 329, for taking totals of the cross totalizers Q1 and Q2, is arranged. The key 329, is attached to the key lever 330, (Figures 10 and 14) swingably mounted on the shaft 68, the key lever being correspondingly formed to that in Figure 10. The nose 330*a*, of the key lever 330, is capable, in a manner to be later described, of co-acting with the nose 110*g* of the member 110, and the projection 330*b* of the key lever 330 is capable of co-acting with the bar 98. The rearwardly directed part of the key lever 330, is somewhat arched at 331, is capable of co-acting with an arched face 332, of a slide 337, vertically displaceable by means of the screw-slot connections 333, 334 and 335, 336, arranged in suitable manner on the right-hand side of the machine and the front wall of the housing. With the projection 337*a*, engages a spring 338, which, on the other hand, is connected at its free end to a pin 339 (Figures 10, 14). To the upwardly-directed end, formed correspondingly to that in Figure 10, of the rod 337 there is riveted a pin 340, which projects into a curved slot 341 of a slide 342. The slide 342 is displaceably mounted by means of screws 343, which pass through the elongated holes 344 of the slide 342. The left hand end of the slide 342 is of fork-shape construction. With this fork-shaped part, there engages the pin 346 of a lever 345, rigidly mounted on the shaft 300. Another lever 347, which is rigidly mounted on the shaft 300, has likewise a pin (not illustrated) which is capable of projecting into the ring groove 164*a* (Figure 3) already referred to, of the sleeve, 164.

On the slide 342 (Figure 10) there is a bent-off lug 348 (Figures 10 and 14) which is capable of being positioned so that the face 349 of its nose 350, lies in front of the face 351 of a locking or aligning tooth 352. On the shaft 353 which, on the one hand, is rotatably mounted in the right-hand side wall 125 of the calculating mechanism and, on the other hand, in a bearing member (not illustrated), suitably mounted in the machine housing, a lever 354 (Figures 12 and 13) is rigidly mounted. The locking and aligning tooth 352, as is evident from Figures 10 and 13 is fork-shaped at its forwardly directed end and its fork-shaped part embraces a sleeve 363*a* (Figure 10) loosely rotatable on the shaft 323, whereby the locking and aligning tooth 352 is guided at one of its ends. At its other end, it is guided by means of a screw, 355, fixed to the lever 354, and the screw projects through an elongated hole 352*a* (Figure 14) in the locking or aligning tooth 352. By means of a spring 356, which on the one hand, engages with a pin 357, fixed to the lever 354, and, on the other hand, is connected to a pin 358 (Figure 14) arranged on the locking or aligning tooth 352, the parts 352 and 354 are so acted upon that the stem of the screw 355 is moved against the right-hand edge of the elongated hole 352 in the locking and aligning tooth 352, whereby their normal position in relation to each other is determined. On the locking and aligning tooth 352 is arranged a tooth-like part 359 (Figures 10 and 14) which, in a manner to be hereinafter described in detail, is capable of co-acting with the toothed wheels 360, arranged on the left-hand cross totalizer Q1. A nose 361 (Figures 12 and 14) provided on the lever 354, is normally in engagement with the master wheel 362 (Figure 10) loosely rotatable on the shaft 323. With the master wheel 362 and the sleeve 362*a* (Figure 13) a coupling half 363 (Figure 13) is rigidly connected.

A lug 364, correspondingly formed to that in Figure 10, on the bar, 342, is capable of co-acting, by means of face, 365 (Figure 10), with a face 366 of a locking and aligning tooth 367. This is fork-shaped at its forwardly directed end and embraces with this end a sleeve 367*g* (Figure 13) arranged so as to be loosely rotatable on the shaft

323. By means of a screw 369*x* which projects into the elongated hole 368 (Figure 13) of the locking and aligning tooth 367, and which is screwed into the lever 369, rigidly mounted on the shaft 353, the locking and aligning tooth 367, is guided. This is of tooth-like construction at its forked-part 370, and this part is capable of co-acting with the toothed wheels (not illustrated), arranged in the cross totalizer Q2. The tooth 371 of the locking lever 369 (Figure 13) is in engagement with the teeth of the master wheels 372, which are loosely rotatable on the shaft 323. By means of a spring 373*x* which, on the one hand, engages with a pin 373, arranged on the lever 369 and, on the other hand, is connected to a pin 367*a* (Figures 11 and 13), fixed to the locking and aligning tooth 367, the parts 367 and 369 are so acted upon that the stem of the screw 369*x*, which is screwed into the lever 369, lies against the edge 374 of the elongated hole 368, of the locking and aligning tooth 367, whereby its rest position is determined.

With the master wheel 372, the sleeve 367*g* (Figure 13) is in fixed relation. To the sleeve 367*g*, a coupling half 375 (Figure 13) is fixed. As will be evident from the above the sleeve 363*a* the master wheel 362, the sleeve 362*a* and the coupling half 363, are connected with one another and are loosely rotatable on the shaft 323, but are not axially displaceable thereon. The same holds for the parts 375, 367*g* and 372.

Further, on the shaft 323, a coupling sleeve, 378, consisting of the two coupling halves 376 and 377, is axially displaceable and rotates along with the shaft 323. With this arrangement, the coupling half 376 is capable of moving into engagement sometimes with the coupling part 363 and at other times the coupling half 377 is capable of moving into engagement sometimes with the coupling part 363 and at other times the coupling half 377 is capable of moving into engagement with the coupling part 375, and finally in the middle position of the coupling sleeve 378, both of the coupling halves 376 and 377 simultaneously engage with the coupling parts 363 and 375, so that alternatively one or other of the totalizers Q1 and Q2, and finally both these totalizers can be operated at the same time.

In the ring groove 378*g* of the coupling sleeve 378, there engages a pin 378*h* (Figure 13) which is fixed to the lever 378*k*, correspondingly formed to that in Figure 13. The lever 378*k* is swingably mounted by means of screw 378*m*, on a lug of the rear wall 241 (Figure 3) of the calculating mechanism. By means of a screw 378*n*, a connecting rod 378*p* is jointed to lever 378*k* which connecting rod 378*p* on its other end is in articulated connection with an angle lever 378*s*, swingably mounted in a suitable manner on the front wall of the calculating mechanism. The lever 378*s* is capable of co-acting by means of its right angled upwardly-bent nose 378*t* with a bar 378*y* attached to the column totalizer T, by means of screws 378*x*. (In Figure 13, only one is visible.)

On the shaft 353 (Figure 12) a lever 378*a* is rigidly mounted, which by means of its part 379, formed correspondingly to that in Figure 13, acts in a mouth 380 of a two-armed lever 381, swingably mounted on the shaft 142. With the nose 378*b* of the lever 378*a*, a spring 378*e*, engages, which acts on the shaft 353, in the clockwise direction and thus holds the parts 354 and 369 in engagement with the master wheels 362 and 372. The lever, 381, is arranged on the outside of the right-hand side wall 125 of the calculating mechanism. This lever is constructed with its end of fork-shape. With this fork-shaped 382 engages a nose 383 of a lever 384, mounted on the shaft 142 and having its end bent-off at right angles. The lever moreover, is arranged at the left of the right-side wall 125 of the calculating mechanism.

The individual parts of a totalizer will n described in detail. In connection with t may be pointed out that in Figure 19, is illus a totalizer of the usual type used up to the ent, while in Figure 20, is illustrated a tot modified in accordance with the invention

On a shaft 456 (Figure 15) rigidly mo in the two side walls 454 and 455 (Figures and 21), a lever 457 is swingably mounted lowest decimal place, and is formed with its end of fork-shape. The release lever, 202 (I 7) hereinbefore described, is capable of eng in the fork-shaped part 458, and of acting lever 457. With the lever 457 there enga spring 459, which on the other hand is conn to a shaft 460 mounted in the two side wal and 455 of the column totalizer T. The 459 acts on the lever in the clockwise dir round the shaft 456, whereby its normal po is determined by the tooth 461 of the leve being in engagement with the 30-tooth to wheel 188 H*t* rotatably mounted on the sha

With the toothed wheel 188 H*t* (Figur 19 and 20) of the lowest decimal place, a di provided with three tens-shift teeth 464, disc 466, are rigidly connected. The three 188 H*t*, 465 and 466, are produced from a piece and consequently represent a single ele The nose 467 provided on the upwardly-di free end of the lever 457 (Figure 15) is ca of acting on a flap 468 rockably mounted two side walls 454 and 455.

To the right of the lever 457 (as seen in 15) there is a lever 469 swingably mounted shaft 456. The downwardly directed lim of the lever 469, is of fork-shape, and is ca of co-acting likewise with the release fing above mentioned. The nose 471, of the leve co-acts likewise with the flap 468. On the 469, a transfer wheel is rotatably mount means of a headed rivet 472 (Figures 15, 1 20), the transfer wheel consisting of a ten-toothed wheel 473, a ten-toothed Maltese 474 and a ten-tooth toothed wheel 475, pro from a single piece, of which the toothed 473, is capable of co-acting with the three-to tens-shift disc 465, and the Maltese whee with the locking disc 468. The disc 466 i vided with three notches 476, for the free pa of the teeth of the Maltese wheel.

The toothed wheel 188 H*t* is, further, in en ment with a toothed wheel 477 (Figures 14, and 20) which is loosely rotatable on a shaf rigidly mounted in the two side walls 454 ar of the column totalizer T. The toothed 477, again, is in engagement with the to wheel 480, loosely rotatable on the shaft 479, is rigidly mounted in the two side walls 45 455 of the column totalizer. A number roll is rigidly connected with the toothed whee The toothed wheel, 475, associated with the decimal place of the hundredths decimal pl in engagement with the wheel 188 Z*t* of th decimal place. The parts above describe the hundredths decimal place are similar f tenths, units, tens etc. decimal places. I following therefore only the difference w pointed out.

By means of a lever 482 (Figures 15 and 16) swingably mounted on the shaft 456, of which lever the nose 483 (Figure 16) acts on a part 484, arranged on the flap 468, the flap 468 is held swung in the anti-clockwise direction (seen in Figure 15), whereby its rest position is determined by contact of the noses 467 of the levers 457, 469 on the one hand, and, on the other hand, by contact of the nose 461 of the lever 457, in the tooth spaces of the toothed wheels 188. The lever 482, moreover, is held swung in the clockwise direction (seen in Figure 15) by means of a spring (not illustrated) which engages with the hole 485, of the lever 482.

Since in the pointing off-place of the column totalizer, which is in working position, no transfer into this column totalizer is permitted to take place, the locking shaft 142 (Fig. 7) and the parts located on it are prevented from being unlocked by the release finger 202, which when the pointing off-place of the column totalizer is opposite the master wheel 189 co-acts with the part SS (Fig. 15) swingably mounted on the shaft 456 of the column totalizer T in such a manner that the projection 487 of part 3 comes to lie against the shaft 488, fixed in the side walls 454, 455 of the totalizer T. Consequently from swinging outwardly the release finger 202 is prevented.

The difference which exists between the usual prior form of totalizer according to Figure 19 and the totalizers constructed according to the invention as illustrated in Figure 20, will now be referred to.

As is evident from Figure 19, the two wheels 188 Z*t*, 465, 466 and 188K, 465, 466, are connected by rivets 479 to one another, so as to form a single element, in order to bridge over the comma place, or for transferring a ten from the tenth's decimal place 188 Z*t* into the units decimal place 188E. It must first be set forth that if the wheels 475 of the transfer wheels 473, 474 and 475 are in engagement with their associated driving wheels 188 a rotation of the last named wheels is not possible as long as the wheel 474 is engaged by a concentric part of the locking disc 466 as shown in Fig. 21. Therefore, if e. g. the Maltese wheel 474, located between the hundredth's decimal place 188 H*t* and the tenth's place 188 Z*t* contacts with its locking disc 466, the wheel 188 Z*t* will not be permitted to rotate, since the form of the teeth of the Maltese wheel 474, which contact with the locking disc 466 (Figure 19) of the wheel 188 H*t*, do not permit of rotation of the same. Accordingly, the wheel 475 which is rigidly connected to the Maltese wheel 474, and which is in engagement with the driving wheel 188 Z*t*, will not permit of a direct rotation of the wheel 188 Z*t* by the master wheel 189 (Figure 7). If, on the other hand, after the locking lever 461, 457 (Figures 15 and 19) has been raised by the locking finger 202 (Figure 7) the driving wheel, 188 H*t* is acted on by the master wheel 189, so the wheel 188 H*t*, as is readily perceived from Figure 20, may rotate without hindrance, as its locking disc 466 rotates past the teeth of the stationary Maltese wheel 474. If, now, during the rotational movement of the wheel 188 H*t* a tens shift tooth 464 (Figure 21) strikes against the toothed wheel 473 rigidly connected with the Maltese wheel 474, so the wheel 473, together with the Maltese wheel 474, can rotate through one unit, since at this instant the tooth concerned of the Maltese wheel 474, passes through the space 476 of the locking disc 466, of the wheel 188 H*t*. Accordingly, as the parts 473, 474, 475 rotate through one unit, so the wheel 188 Z*t* will also rotate through one unit whereby the number roller of the tenth's decimal place is shifted by way of the wheels 477 and 480, through one unit.

If now, the wheel 188 Z*t* of the tenth's decimal place is to be rotated by the master wheel 189, the lever 469 (Figures 15 and 19) must be raised by the release finger 202. The transfer or locking wheel 473, 474, 475 located between the hundredth's decimal place and the tens place, moves out of engagement with its associated locking disc 466, and also with the wheel 188 Z*t*, so that the latter can be rotated by the main driving wheel 189 (Figure 7). Moreover, the wheel, 188K naturally, is also rotated by the rivets 489, without, however, having any action on the comma roller 490. If, however, a tens transfer results in the tenths decimal place, the units wheel 188E and the associated number roller are rotated, by way of the transfer wheel lying between the wheel 188K and the wheel 188E, one unit further.

In the automatic "clearing" of a totalizer the procedure according to the invention is as follows:

The locking or aligning tooth 253, 260 (Figure 10) is locked in a tooth space, e. g. of the wheel 188Z (Figure 20), so that a rotation of the wheel 188Z is impossible. The master wheel 189 (Figure 7) is in this case located opposite to the wheel 188E and the release finger 202 has raised the locking wheel disposed between the wheel 188E and the wheel 188K. If the master wheel 189 now rotates in the subtractive sense, the wheel 188E, if its associated number roller, e. g. indicates a "7," will rotate backwards by way of "6," "5" etc. It can do this until one of its tens shift teeth strikes against the wheel 473 of the transfer wheel which has not been raised, and which is located between the wheel 188E and the wheel 188Z. Since this transfer wheel, however, is in engagement by way of its wheel 475 with the wheel 188Z, and the wheel 188Z is locked by the aligning tooth 253, 260, the wheel 188E cannot rotate further, at which moment its associated number roller shows a "0."

As soon as the clearing of the units place is effected, that is to say, as soon as the number roller 481 of the units place indicator "0" and this mark is printed on the sheet, a carriage movement is effected automatically, the totalizer with the decimal place moving into working position. In this position of the totalizer, the clearing key is now depressed hereupon the totalizer with its tens place moves into working position.

In this case, therefore, the aligning tooth 253, 260, is in engagement with the wheel 188K (Figure 19) while the master wheel 189 is in engagement with the wheel 188Z*t*. Since, however, the wheels 188K and 188Z*t* are riveted together and, on the one hand, the wheel 188K is locked by the aligning tooth 253, 260, and on the other hand the wheel 188Z*t* is to be rotated, so it is obvious that this is an impossibility.

In order to render this possible, the column totalizers as well as the cross totalizer, are modified according to Figure 20. Instead, therefore, as is shown in Figure 19, of riveting the wheel 188Z*t* to the wheel 188K, according to the invention, the wheel 188K, is riveted to the wheel 188E, as shown in Figure 20. Further the transfer wheel, which lies between the wheels 188K and 188E, as shown in Figure 20, is arranged according to Figure 20, between the wheel 188K and 188Z*t*, whereby the lever 469 holding the same

must lie in the plane of the units decimal place and the transfer wheel is to be held through a distance sleeve 431 on its pin 472, by the lever 469.

If, now, with the arrangement according to Fig. 20 the wheel 188Z is held locked by the aligning tooth 253, 260 (Figure 10) the release finger 202 brings, by way of the parts 469, 472 and 431, the transfer wheel located between the wheels 188K and 188Z*t* out of an operation position, so that the wheel 188E, with which the master wheel 189 is now in engagement, can be rotated by the master wheel 189, although the wheel 188E is riveted to the wheel 188K.

If now the tenth's decimal place is to be cleared so the aligning tooth 253, 260 (Figure 10) is in engagement with the wheel 188K, whereby the release finger 202 brings the transfer wheel located between the wheel 188Z*t* and the wheel 188H*t* out of an operative position, while the main driving wheel 189, (Figure 7) is in engagement with the wheel 188Z*t*. Consequently the number roller 431 is (Fig. 20) rotated to zero through the intermediary of the parts 477, 480 which position is determined by the fact that the wheel 188Z*t* is held by the lock effected by the aligning tooth 253, 260.

By this necessary modification for the automatic clearing the construction of the individual parts in themselves does not require to be changed in any way. Further the tens transfer described with reference to Figure 20 remains also exactly the same as in the usual prior totalizers according to Figure 19.

Since, further, as will be readily perceived from the foregoing, the decimal place which lies adjacent and next higher to the decimal place to be cleared must always be locked, a value located in the highest place of a totalizer cannot be cleared, in other words, precautions must be taken that in the highest place no value at all can be registered.

This is attained in the following manner. As is obvious from Figure 15, on the locking lever 469*a*, which carries the transfer wheel disposed between the wheel 188H (Figure 15) and the wheel 188Z, a nose 492 (Figure 15) is provided which lies aaginst the shaft 488. In this manner the locking lever, 469*a*, exactly as is the case with the locking member S for the comma place, is not allowed to be swung by the release finger 202 (Figure 7), so that a registration of a value, therefore, on the wheel 188H, is not possible. In order to render visible from the outside (through the inspection aperture of the totalizer) that this decimal place is not a calculating place, a blank roller 493 (Figure 15) is inserted which shows a black spot in the position in which the remaining number rollers show a "0", while the remaining periphery of the blank roller is red. This has for its purpose, that if from the number roller of the tens decimal place 188Z a tens transfer in the additive or subtractive sense should occur on to the roller 493 (which is possible after what has been said above with reference to tens transfer) the attention of the operator is called to the fact that he has overstepped the capacity of the totalizer.

The method of operation of the subject of the invention shall now be explained by the aid of an example of a calculation.

After the form is inserted, to commence with the name "O. Schmidt" (Figure 22) is typed in the column indicated by "1" by striking the letter keys 32 (Figures 1 and 2) whereby the paper carriage 4 is traversed stepwise to the le the column of the sheet indicated by " moved into the typing position. In the c "2", the number "15" is now entered by s the corresponding number typing keys 3 ures 1 and 2).

After the number "15" has been typed utilizing the space key S (Figures 1 and paper carriage 4 has been brought into tion in which the column indicated by "3 the typing position. By means of the lett 32, the "months" column "3" is now fil whereby the paper carriage 4 is brought the column of the sheet indicated by "4 the typing position.

In order to facilitate the survey of th totalizers T1 to T8, necessary for filling sheet illustrated in Figure 22, and the t shift of the cross totalizers Q1 and Q2 (1 and 2) which the known control pla (Figures 1 and 10) of the column totaliz to T8, are set for the kind of calculation cross totalizers Q1 and Q2, a table is illu in Figure 23.

As already stated, the paper carriage 4 is ed so that the column "4" of the sheet is typing field whereby the totalizer T1 is the working position. Moreover, the carr carrying both of the cross totalizers Q1 has been taken so far to the left, by the totalizer T4 and the coupling device, *s*, *s* 1) that the corresponding decimal places totalizers lie opposite to the master whe (Figure 10) and 372. On the column t T1 moving into the working position, h the bar 87*t* (Figure 8) fixed to the same, ha into operation on the nose 87*s'* of the le whereby the nose 87*s''* of the lever 87*s* leased the lever 87*u*, and further the rem parts in connection with the lever 87*s* ha taken up the position according to Fi so that the lever 87*a* of the shaft 87 and th 90'' of the bar 93, are released by the le and can move freely. Now the calculati 34, corresponding to the amount of "RM2 depressed after one another, the key corre ing to the value "2" being struck first. be first remarked that in consequence positioning for addition of the change-ov illustrated in Figure 11, by the setting pl of the totalizer T1, this amount is added cross totalizer Q1. Since, however, the 378 (Figure 13) which in this case is not di by the cam 378*y* of the totalizer T1 from i tion shown in Fig. 13 the coupling halves are out of engagement according to wh amount is not registered in the totalizer Q direction of rotation of both master whe 372 (Fig. 13) is determined by the cams the column totalizer T1. On the depres the calculating key lever corresponding value "2", the rearwardly-directed limb calculating key lever 82 (Figures 5 an swung round the shaft 68 in the clockwise tion, whereby the associated U-shaped sto ber 85, the downwardly directed limb 84 o contacts on a face 82*a* of the calculating k 82, is swung in the anti-clockwise directio its shaft 87. The contact pin 131, provided stop piece 85, thereby moves into the movement of the arm 130 of the feeler fin corresponding to the value "2". Further, further depression of the already mention culating key 34, the pawl 95 (Figures 2, 5 arranged on the key lever 82, acts on the

angled upwardly bent nose 97, of the bar 98, mounted on the pins 98*a* (Figures 5 and 6) and swings this in the clockwise direction against the action of the spring 109. Moreover, the edge 98*s* of the lug 98*x* (Figure 5) of the bar 98, slides from the edge 103*g* of the bearing member 103, which is formed as a stop 103*a*, whereby the levers 100, 101 and 111 rigidly mounted on the shaft 99, and further the three-armed lever 114, mounted on the shaft 68, and in engagement with the lever 114, by means of the pin-slot connection 111, 112, can follow the pull of the spring 115.

On the swinging of the parts 100, 98 and 101 in the anti-clockwise direction, the nose 97 of the bar 98 slides underneath the nose 95*d* of the pawl 95. The locking bar 110 swingably arranged on the shaft 99, which, at its ends, on account of the pull of the spring 110*b*, lies against pins 100*b* and 101*b* respectively, likewise participates in the movement through the release of the bar 98 by the stop 103*a*, and is swung in the anti-clockwise direction. By the movement of the locking bar 110, the upwardly-directed right-angled bent bridge 110*g*, slides over a nose 82*h* (Figure 5) of the depressed key lever 82, and locks the same in the depressed position. Further, a part 120*c*, fixed to the locking bar 110, participates in the swinging movement and slides along on the under edge of a two-armed lever 120 (Figure 5) swingably mounted on the shaft 68 and, in consequence of the pull of the spring 123, attached to the lever 120, is held in the recess 120*d* until after a revolution of the coupling consisting of the cams 69, 71, 72, the lever 120, the part 120*c*, as well as the locking bar 110, are released again in a manner to be later described. A depressed calculating key lever, therefore, is not released again, owing to the locking means, 120*c* and 120*d*, until the corresponding value has been transferred. Further simultaneous depression of two calculating keys 34, cannot take place owing to a well known roller lock. As already explained, on striking the calculating key 82, corresponding to the value "2", the system of levers 100, 101 and 111, attached to the shaft 99, as well as the three-armed lever 114, swingably mounted on the shaft 68, have been released, whereby the latter lever under the pull of its spring 115, has been swung in the direction of the arrow *m* (Figures 5, 2). The nose 114*x* of the upwardly directed arm 114*a*, of the lever 114, moves out of reach of the nose 80, of the pawl 74. The downwardly-directed arm 114*b*, on the other hand, has moved into the path of movement of the cam 72. Since the pawl 74 is displaceable in relation to the cam 72, by means of the pin-slot connection 75, 76, 77, 78 and of the compression spring 79, and was locked by the nose 114*x* of the lever 114, the pawl 74 will follow in the arrow direction *c* under the pressure of the spring 79, on swinging out of the lever nose 114*x*, whereby the tooth 74*a* of the pawl 74, moves into engagement with the toothed wheel 73, continually rotated by way of the parts 58 (Figure 1) 59, 56, 57 and 28 to 30, whereby all three cams 69, 71 and 72, are coupled with the toothed wheel 73 so that they participate in the rotational movement of the toothed wheel and in the arrow direction *b* (Figures 2, 5).

In the rotation of the three cams, after the nose 80 of the pawl 74, has just moved past the nose 114*a* of the three-armed lever 114, the cam 72 first acts at 60 degrees (Fig. 24) on the arm 114*b* of the three-armed lever 114 lying in the path of movement, and brings the upper arm 114*a* of the lever 114, in the anti-clockwise direction into the path of movement of the nose 80 of the pawl 74, and acts on the pawl 74 in the raising sense in a manner to be later described. By the return of the lever 114, the tension spring 115, is again tensioned and the bar 98, mounted on the levers 100 and 101 is returned by the arm 111 connected to the lever 114, and by the resulting swinging movement of the shaft 99, in the clockwise direction, whereby the nose 98*x* of the bar 98, moves behind the bend 103*a* of the stationary support 103, by means of the pull of the spring, 109. In consequence of the rocking movement of the bar 98 in the clockwise direction, the nose 95*d* of the pawl 95, falls behind the nose 97 of the bar 98 since at this moment the key lever, follows the movement of the bar 98, and rests behind the nose 97 of the flap 98, since at this moment the key lever 82 concerned is still depressed and is held by the locking bar 110 which is held by the part 120*c* through the lever nose 120*d*. Although the locking bar 110 is held swung in its position in the anti-clockwise direction, the part 100, 98 and 101, in consequence of the resilient connection of the springs 110*b*, are still capable of swinging in the clockwise direction.

On the further rotation of the three cams 69, 71, 72, the roller 133 on lever 132, 134, which by means of the pull of the spring 141, is held in contact with the cam 69 (Figure 5) first follows at 10 degrees (Fig. 24) the depression of the same, whereby the draw-bar 134 jointed to the roller lever 132, following its spring 141, is drawn in the direction of the arrow *a*. The part 137 pivotally connected with the draw-bar 134 (Figure 7) by means of the screw 135, is thereby moved downwards along the draw-bar. The pin 143, fixed to the part 137, which passes through the slot 144, of the lever 136, takes the latter and the shaft 142 along with it in the clockwise direction. The angle lever 150, which on the one hand is jointed to the lever 136 through an angle member 148, is likewise, through the movement of the draw-bar, swung round its point 151 in the anti-clockwise direction. Consequently the downwardly going arm of the lever 150 displaces the toothed wheel 159, non-rotatably mounted on the shaft 158 in the arrow direction *a*2, by means of its grooved connection 155 and 156, whereby the teeth of the same are coupled with the teeth 177 of the calculating sector 174. The pins 160 (Figure 3) arranged on the toothed wheel 159, which are continually guided in the grooves of the claw 161, rigidly mounted on the shaft 158, ensure that the teeth of the toothed-wheel 159, slide securely into the teeth of the calculating sector 177 (Figure 7). As already mentioned, the shaft 142 is rotated in the clockwise direction by the lever 136, whereby the finger-shaped lever 202 rigidly mounted on the shaft 142 is swung and the locking lever, partially illustrated in Figure 7 (see also Figure 15) unlocks the corresponding decimal place of the totalizer T1 located in the working position.

Further, on the one hand, the adjusting tooth 203, which is rigidly mounted on the shaft 142, releases the master wheel 189, and the shaft 136 connected with it, and, on the other hand, the adjusting tooth 179 likewise rigidly mounted on the shaft 142, releases the toothed wheel 178 and the shaft 158 connected with it.

Further, the arm 256, mounted on the shaft 142 (Figure 9), thereby acts by way of its spring 258 on the aligning tooth 253. This is now in en-

gagement with some of the next higher decimal places lying adjacent to the decimal place located in the working position in relation to the master wheel 189 (Figure 7) of the column totalizer. Consequently, the aligning tooth, 253, is moved in the direction of the arrow *a* whereby the driving wheel or driving wheels of the higher decimal places which are not in the working position, are released so that these wheels 189, in the event of tens transfer ensuing, can freely rotate.

The locking lever 193, pinned to the shaft 142, swings in the clockwise direction and releases the nose 197 of the lever 196 jointed to the lever 194, by means of a screw 195.

By the swinging movement of the shaft 142 (Figure 12) in the clockwise direction, the levers 384 and 381 are also swung in the clockwise direction, whereby the part 373*a* is swung together with the shaft 353 and the two locking teeth 354 and 369, in the anti-clockwise direction. Accordingly, these two locking teeth also release the master wheel 362 and 372 of the cross totalizers Q1 and Q2. Moreover, the release fingers, 353*a* and 353*b*, attached to the shaft 353, are also swung with this shaft in the anti-clockwise direction, whereby the locking lever of the corresponding decimal places of the cross totalizers Q1 and Q2 are released. Since, as stated, the locking levers 354 and 369 mounted on the shaft 353, are also swung in the anti-clockwise direction, so they take along with them, by means of their associated springs 356 (in Figure 10 only one is illustrated) the aligning teeth 352 and 367, whereby in a similar manner as by the aligning tooth 253 (Figure 9) the driving wheels of the cross totalizers Q1 and Q2 are released for possible tens transfer occurring.

After these movements have taken place, the cam 72, meanwhile, on further rotation has moved so that its lower curved part has arrived in the vicinity of the roller 168 on lever 167 whereby the lever 167 at 30 degrees (Fig. 24) following the pull (Figure 7) of the spring 171 engaging with the slide 170 and the correspondingly formed cam 72, is swung round its shaft 87 and, accordingly the slide 170 jointed by means of the screw 169 (Figure 5) is drawn in the direction of the arrow *a*. By the downward movement of the slide 170, the slot 173*x* (Figure 7) acts on the roller 175 (Figs. 3, 7) arranged on the calculating sector 174, 177 and projecting through the slot 173*x*, and swings the sector 174, 177 in the direction of the arrow *p*. Since the latter is rigidly connected to the shaft 128, by means of the clamping device 176, this shaft participates in the rotational movement in the direction of the arrow *p*. The feeler fingers 129, rigidly mounted on the shaft 128 and designed for the values "0" to "9", are thereby swung together in the anti-clockwise direction and so far until the feeler finger 129 corresponding to the value "2" strikes on the pin 131 of the stop-piece 85, which has been swung upwards by depression of the calculating key 34, corresponding to the value "2". The stroke of the feeler finger 129, is thereby transmitted to the calculating sector 174, 177, and accordingly the toothed wheel 159 (Figure 7) which is in engagement with the sector, is rotated through two units, whereby the value is transmitted by way of the shaft 158, and the change-over gear 180 (Figure 7) 187, which was previously set for addition, through the knob 315 (Figure 1), and the shaft 186, to the main driving wheel 189, which on its part, registers the value "2" in the corresponding totalizer place of the column totalizer T1.

Moreover, the rotational movement of tl 158 (Figures 7 and 11) is transmitted of the change-over gear illustrated in Fig to the shaft 223 on which the sleeve 378 13) is fixed, which, as hereinbefore desc coupled only with the main driving wh for the cross totalizer Q1, whereby the va is registered only in this cross totalizer.

By the contact of the feeler finger 129 sponding to the value "2," with the stop 131, the slide 170, together with the ro on lever 167, was prevented from further ward movement and since the formation cam 72 (Figure 5) is adapted for the stroke, namely for the stroke of the feele 129, corresponding to the value "9," so th 168 on lever 167, remains for a short tim suspended, and on the further rotation cam 72, is engaged and brought back. however, the return of the roller 168 lever 167, and the slide 170 connected occurs, the arms 204 and 211 (Figures 7) rigidly mounted on the ends of the sh participate in the swinging movement of t er fingers 129 (or of the calculating sec 177) and of the shaft 128. Accordin frame, 213, 216 and 206, jointed at the 212 and 205 and guided on the slide bars by means of screws 220 and 217, will sl wards through an amount corresponding value "2." The lower edge 216*a* of th bridge 216, thereby reaches a position o nose 35*g* (Figure 3) of the number key l corresponding to the value "2."

Shortly, thereafter, the roller 166 w mounted on the lever 165 rigidly connect the shaft 87 (Figures 5, 7) falls into the sion of the cam 71 at 130 degrees (Fig. 24) by the arms 219 and 222, rigidly conne the shaft 87, are swung in the clockwis tion by the springs 225 engaging with the arms 223 and 224, and with them also th 213, 216, 206 guided by them. This frame strikes on the nose 35*g* of the number key lever 35, corresponding to the value presses this lever downwards against th of its spring 38 (Figure 2). The contr 49*c* of the draw-hook 49, is moved by t pling lever 41, into engagement with t shaft C. This now draws the draw-hook wards, which by way of the intermedia 47, causes the type lever 54 to strike on th 5, whereby during the striking movem control tooth 49*c* moves out of engageme the cam shaft C. Through the striking ment of the type lever, the paper carri been moved by way of the parts 54*a* to step to the left under the pull of the draw-spring so that the next lower plac column totalizer T1 now lies opposite main driving wheel 189 (Figure 7).

After the termination of the calculatin tion and before the commencement of th carriage shift (in which the time for r tion of the value "10" is to be taken in sideration) the raising of the roller 133 132, which is loosely mounted upon the s is effected at 145 degrees (Fig. 24) by vated part of the cam 69, which is indic 69*c*. The slide 134 (Fig. 7) is thereby r the opposite direction of the arrow *a*. It takes along with it the lever 137, by m the screw 135, in the anti-clockwise d

whereby by way of the parts 143, 145 and 146, the lever 135 is swung in the anti-clockwise direction. In consequence of this swinging movement of the lever 136, on the one hand, the shaft 142 is swung in the anti-clockwise direction, and, on the other hand the wheel 159, is brought out of engagement again (Figure 3) with the calculating segment 174, by means of the parts 148 and 150 (Figures 7 and 3). By the swinging movement of the shaft 142 in the anti-clockwise direction, the releasing finger 202 (Figure 7) has released the locking lever (in Figure 7 illustrated broken off), lying opposite to it, so that the calculating place of the totalizer T1, in which the value "2" was registered is again locked. By the swinging movement of the shaft 142, in the anti-clockwise direction, the lever 199 (Figure 7) has also been swung along with it and has swung the lever 196 against the action of its spring 200.

Further, the arm, 256 (Figure 9) has raised the aligning tooth 253, into its position illustrated in Figure 9, whereby the wheel 183 (Figure 3) possibly rotated by a tens transfer is aligned. This is advantageous for the reason that with wide totalizers, in consequence of unavoidable slight play in manufacture, the numbers visible in the inspection aperture are liable to be disposed in spiral fashion, whereby the numbers located in the higher places are occasionally not completely shown. This is avoided by the aligning tooth 253.

Further, by the swinging movement of the shaft 142, in the anticlockwise direction (Figure 12) the release fingers 353*b*, 353*a* of the two cross totalizers Q1 and Q2, are swung, by way of the parts 384, 383, 382, 381, 378*a* and 353 in the clockwise direction, whereby the corresponding locking levers were also released and consequently the associated calculating places were locked. Further, the teeth 179 and 203, fixed on the shaft 142 (Figure 7) and also the teeth 354 and 369, fixed on the shaft 353 (Figures 10 and 12) have entered again into their wheels 178 and 189 and also 362 and 372, whereby the calculating mechanism also is again locked. Moreover, the aligning teeth 352 and 367 have been moved by the levers 354 and 369 back into their wheels lying opposite to them, whereby the same object is attained as by the aligning tooth 253 (Figure 9). As soon as these locking operations are completed, the carriage shift operation effected by the typing operation as above described, follows.

After the locking operation is effected, the roller 166 on the lever 165, which is rigidly mounted on the shaft 87, is raised at 225 degrees (Fig. 24) by the rising edge 71*a* (Figure 5) of the cam 71. The shaft 87 is thereby swung in the anti-clockwise direction. Accordingly, the arms 222 and 219, fixed on the shaft 87, are also swung in the anti-clockwise direction, whereby the frame 213, 216, 206 mounted in them, is raised into its upper position. In consequence of this, the nose 35*g* (Figure 3) of the number key lever 35, corresponding to the value "2" is released. This now returns into its rest position under the action of its spring 38 (Figure 2), whereby the coupling lever 41, mounted on the key lever again engages over the nose 45 of its co-operating draw lever 49.

In the swinging movement of the shaft 87 (Figure 7) in the anti-clockwise direction, the arm 194 has also raised the lever 196, whereby under the action of the spring 200, the nose 197 of this lever snaps over the nose 198 of the lever 199 already located in its rest position.

After the raising of the frame 213, 216, 206, the rising face 72*b* (Figure 5) has come at 240 degrees (Fig. 24) into operation on the roller 168, mounted on lever 167, which is loosely mounted on the shaft 87, and has brought this lever into its rest position. The slide 170 was thereby raised against the action of its spring 171, whereby the inclined slot 173*x* of the slide, acts on the roller 175 of the calculating sector 174, which has meanwhile been released from the wheel 159, and swings this sector in the opposite direction to the arrow *p*. In consequence of this, on the one hand, the shaft 128 rigidly connected to it, is brought back together with the feeler fingers 129 into their rest position while on the other hand, the number key striking frame 213, 216, 206 is returned to its rest position illustrated in Fig. 7, by way of the arms 204 and 211 jointed to it and rigidly mounted on the shaft 128, in which position the frame is held by the elevated part of the cam 72 (Figure 5).

Further before the return movement of the number key striking frame 213, 216, 206, into its rest position illustrated in Figure 7, has taken place the rising edge 69*c* (Figure 5) of the cam 69, has come into operation at 192 degrees (Fig. 24) on the end 120*a* of the lever 120, whereby this lever is swung against the action of its spring 123. Consequently the nose 120*b*, of the lever 120, releases the part 120*c* of the locking bar 110, whereby this bar under the action of its spring 110*b* (Figure 6) tensioned by the previous return of the bar 98 into its rest position, likewise moves back into tis rest position. Accordingly, the nose 82*h* (Figure 5) of the calculating key lever 82 corresponding to the value "2" is released, which lever under the action of the spring 89 engaging with its associated stop member 85 (Figure 7) now returns along with the stop member 85 into the rest position illustrated in Figure 7, whereby the pawl, mounted on the calculating key lever 82, also rests again over the edge 97 of the bar 98.

Finally, the nose 80 of the pawl 74, mounted on the coupling disc 72 (Figure 5) pushes against the nose 114*x* of the three-armed lever 114, already located in its rest position, whereby the pawl 74 is brought out of engagement against the action of its spring 79, with the wheel 73 of the continually rotating shaft 58. In order to prevent the cam series 69, 71, 72 from springing back at the moment when the pawl 74 is raised out of engagement with the toothed wheel 73, the roller 117 of the roller lever 116, snaps at 200 degrees (Fig. 24) into the depression 69*d* of the cam 69 under the action of its strong spring 119, whereby the cam series 69, 71, 72 on the pawl 74 being raised, is held in their position illustrated in Figure 5.

It would be too exhaustive a matter to repeat the process already described for the registration of the value "2", for the values to be registered in the totalizers T2 to T6 since the operations are exactly the same.

The following may be mentioned at this point briefly in addition.

The paper carriage or the totalizer T1 is now located with the decimal place following the value "2" in the column "4", in the working position in which a "0" is to be registered, i. e. in this case, therefore, no calculating operation is to take place, while the typing process must be released.

To this end, the feeler finger 129, corresponding to the zero calculating key 82 (Figure 7) is fixed to the clamping jaw part 129*d*, of the arm 204. On striking the zero calculating key 34, the

same operations occur exactly as above described, only with the difference, that in consequence of the contact of the finger 129, corresponding to the value "0", with its stop screw 131, no swinging of the calculating segment results. On the other hand, the bar 216 is moved downwards and strikes on the nose 35*g* of the number typing key corresponding to the value "0" and the associated type lever is caused to strike. Herewith, a carriage step is again released so that now the units decimal place of the totalizer T1 (the place lying next the comma place) is located in the working position.

Here, the same operations take place since a "0" is to be dealt with, whereby the totalizer T1 moves so that its comma place is in the working position.

If, here, unintentionally a calculating key is struck, so the coupling 69, 71, 72, 74, naturally makes a revolution and the bar 216 would be moved downwards by the cam 71 and the roller 165, 166, by way of the parts 87, 222, 219, and the number typing key corresponding to the value of the depressed key would be depressed, whereby the value printed would obviously be incorrect. In order to prevent this, the locking arrangement 197, 196, 194 is provided which does not permit swinging of the shaft 87, and with it a downward movement of the bar 216.

This locking action is obtained by arranging a fixed locking member SS (Figure 15) in the comma position. Accordingly, since this cannot swing out, so the release finger 202 (Figure 7), lying opposite to it cannot swing in the clockwise direction. On account of this the shaft 142 and the lever 199 remain substantially in their rest position and thus do not release the lever 196, since owing to this, the lever 136 cannot swing out, so that the parts 148 and 150 connected to it remain at rest, so that the wheel 159 does not move into engagement with the calculating segment 174. This segment can thus swing out under the action of the spring 171, which engages with its operating part, 170, whereby only an idle stroke of the same and of the bar 216, is caused. This, however, in consequence of the above-mentioned effective position of the locking device 199, 196 will not cause a numeral type actuation.

Nevertheless, if it is desired, a comma could be printed under these circumstances in the comma place. For this, it is only necessary that the slots 218 (Figure 7) and 221 in the arm 219 and 222 are formed of such length that the calculating segment 174 can swing through ten units so that in this case, therefore, the bar 216 could act on a projection 35*g* (Figure 3) of the comma typing key. At the same time, however, the locking device 199, (Figure 7) above described, must be abandoned, since this device would prevent a swinging movement of the shaft 87, and therewith a downward movement of the bar 216. In spite of the swinging movement of the segment 174, however, no transmission of values takes place to the calculating mechanism, since, as mentioned, the wheel 159, is not in engagement with the calculating segment 174. In the present case, the typing of the comma is discarded and thence the lock, 196, 199 is retained.

In order to pass from the comma place into the next lower decimal place, the space key S (Figures 1 and 2) is struck, so that the totalizer T1, is now located with its tenths decimal place in the working position.

If the numerical example given in Figure 23 is now considered, so it should be clear wi further explanation that for the further umns, including the column 9, the same proc is followed only with the difference that i columns 5 to 7, inclusive, the cross totaliz is changed over to subtraction by the corres ing column totalizers T2 and T4, while the 378 (Figure 13) remains in its left-hand po in which the cross totalizer Q2 is therefor coupled.

In the columns 8 and 9 (Figure 22), the 378 is brought into its middle position b totalizers T5 and T6, and positioned for tion so that the values shown in the col 8 and 9, are added in both of the cross tota Q1 and Q2.

The amount "184,30" is then visible i cross totalizer Q1 and the amount "4,30" i cross totalizer Q2.

In order to withdraw these amounts fro cross totalizers Q1 and Q2, and register automatically in the column totalizers T T8, it is necessary first to depress the tab key 93 corresponding to the hundreds de place in order to bring the hundreds de place of the column totalizer T7 into the ing position, whereby the cross totalizers Q Q2 are also moved by means of the co device *s1* and *s2* (Figure 1), so that their dred decimal places also are brought int working position.

As soon as the column totalizer T7 arri the working position, the pre-setting plat which has been set on subtraction, of the c totalizer T7, acts on the nose 302 of the lever 3—03, and swings the same round the 304 in the clockwise direction, against th tion of the spring 307.

In this movement, the fork-shaped part lever 303, acts on the pin 309 riveted to th 311, whereby the same is swung in the clo direction. Since the pin 309 is in engag with the recess 312 of the part 298, the c rod 298 is displaced in the direction of the *r*, indicated in Figure 10. In consequen this, the lever 299, the shaft 300, the lev and the lever 347 are swung in the anti-wise direction. Since the pin 322 of the 320 and the pin (not illustrated) of the 347 engage in the ring groove of the slee rigidly mounted on the toothed wheel 1 toothed wheel 162 is displaced to the left shaft 158 and in this manner is disengaged the toothed wheel 324 and is engaged wit intermediate wheel 328 which, again is i gagement with the toothed wheel 325, wh not rotatable on the shaft 323. In this m the direction of rotation of the driving 362 has been reversed. In regard to this i be remarked that the bar 378*y* (Figure 13 arranged on the column totalizer T7 tha bar 378*y* on the entrance of the column izer T7 into the working position is not a rock the lever 378*t*, 378*s* according to whic sleeve 378 remains in its position, illustra Figure 13, in which the teeth 377 of the 378 are out of engagement with the teet of the driving wheel 367*g*, 372 of the cro talizer Q2, while the teeth 376 of the slee are in engagement with the teeth 363 of the ing wheel 362 for the cross totalizer Q1. sequently, on the operation of the machi number rollers of the cross totalizer Q1, a tated in the negative sense, while the n rollers of the cross totalizer Q2, are not

upon. The column totalizer T1 remains set for additive operation. The nose 81*d*'' releases the hook 98' of the bar 98.

Now, the key 329 for total-taking (TC) of the cross totalizer is depressed. With this operation the face 330*b* of the lever 330 acts on the nose 97 of the flap 98 and swings this in the clockwise direction against the action of the spring 109 (Figure 5). In this movement the lug 98*x* (Figure 5) of the flap 98, slides from the edge 103*g* of the bearing member 103, which is formed as a stop whereby the levers 100, 101, 111, rigidly mounted on the shaft 99 and the lever 114 mounted on the shaft 68 follow the pull of the spring 115, which engages with the three armed lever 114.

By the resulting swinging movement of the lever 114 in the clockwise direction the pawl 74 is engaged with the wheel 73, whereby the cams 72, 71, 69 participate in the rotation of the shaft 58 in the arrow direction *b*. The depressed key 329 (T. Q.) for taking totals of the cross totalizers Q1 and Q2 is held automatically for such time in the depressed position in the manner hereinafter described, until the cross totalizer Q1 is cleared, whereby the pawl 74 remains in engagement with the wheel 73 also for this period.

After, therefore, the shaft 58 and with it the cams 72, 71, 69 have commenced to rotate in the arrow direction *b*, the cam 72 acts first on the arm 114*b* of the lever 114 and swings the same against the action of its spring 115 and in the opposite direction of the arrow *m*, whereby the parts 111, 99, 100, 101 and 98 are swung in the clockwise direction, while the locking bar 110 at this point is still held swung-out in its anti-clockwise position by the engagement of the recess 120*d* of the lever 120 with the part 120*c*. In the swinging of the bar 98 in the clockwise direction, however, its nose 97 slides along on the projection 330*b* of the lever 330 of the key 329 (T.Q.), whereby the lug 98*x* of the bar 98 cannot engage with the stop 130*a* of the bearing member 103. Consequently, the parts 111, 100, 101, 98 (Figure 5) are not held at the end of their swinging movement in the clockwise direction but follow, on the further rotation of the cam 72, the action of the tensioned springs 115 and 110*b* so that the lever 114, therefore, is swung again in the arrow direction *m* and the parts 111, 100, 101, 98 are swung in the anti-clockwise direction, whereby the tension of the springs 115 and 110*b* is diminished.

When, shortly before the end of the first revolution of the cams 72, 71, 69, i. e., shortly before the termination of the calculating operation in the hundred denomination, the lever 120 by the cooperation of its arm 120*a* with the projection 69*c* of the cam 69 is swung round the shaft 68 against the action of the spring 123, the parts 120*d* and 120*c* are disengaged. Since, however, at this point the parts 111, 99, 100, 101, and 96 under the action of the spring 115 attached to the lever 114 are already swung again so far in the anti-clockwise direction that the pins 100*b* and 101*b* contact with the locking bar 110 and the latter is held up to this point in the locking position by the lever 120, therefore this bar is held by the pins 100*b* and 101*b* until the nose 120*b* of the lever 120 snaps behind the part 120*c*. Since, after the preceding movement, the parts 114, 111, 100, 99, 101 and 98 have been brought back again into the working position by means of the spring 115, so the nose 114*x* of the arm 114*a* of the lever 114 has again moved out of the working position in relation to the nose 80 of the pawl 74, whereby the cam series 72, 71, 69 is not uncoupled after the resulting revolution of the same, but commences a further revolution and consequently a new calculating operation also, after a carriage step, as hereinafter described, takes place so that the cross totalizer Q1 is then located with its tens denomination in the calculating position.

This operation is repeated for each denomination of the cross totalizer Q1 so that, therefore, the key 329 (T. Q.) in accordance with what has been said above, is held automatically depressed until the totalizer Q1 is cleared.

After having described the locking of the key 329 (T. Q.) in its depressed position, the further operations which are carried out on the depression of this key will be set forth.

The face 331, of the key lever 330, moreover, now acts on the depression of the key 329, on the face 332 of the slide 337, so that this slide moves upwards in the opposite direction of the arrow *a* (Figure 10) and against the action of its spring 338. With this, its pin 340, acts on the incline 341*a* of the slot 341 of the slide 342, whereby the slide 342 is displaced to the left (seen in Figure 10).

Now, should it have been forgotten by inadvertence to change over the cross totalizer Q1 for subtraction, because the pre-setting plate 301 of the column totalizer concerned, in this case T1, has not been set, this is not a disadvantage since, when the slide 342 moves to the left it acts on the pin 346 fixed to the lever 345, and rotates the lever 345, the shaft 300, the levers 347 and 320 in the anti-clockwise direction, so that the driving wheel 362, by means of the change-over gear 162, 328, 325, the shaft 323, the sleeve 378 (Figure 13) and coupling halves 376, 363, is changed over automatically for subtractive operation.

In the movement of the slide 342 (Figure 10) to the left, the nose 350 of the part 348 of the slide 342 moves in front of the face 351 of the aligning tooth 352 of the cross totalizer Q1, and the nose of the part 364 of the slide 342 moves in front of the face 366 of the aligning tooth 367 of the cross totalizer Q2, so that the teeth 359 and 370 of the aligning teeth are held in engagement with the four toothed wheels 360 (Fig. 14) of the cross totalizers Q1 and Q2, lying to the left of the driving wheel 362 or 372, so that the toothed wheels thus engaged are locked. The wheels, 360 of the cross totalizers Q1 and Q2 correspond, moreover, to the wheels 188 of the column totalizers.

In the rotation of the three cams 69 (Figure 5) 71 and 72, the roller 133 on lever 132, moves under the action of the spring 141 engaging with the rod 134, from the elevated part of the cam 69, on the lower part of the same whereby the draw-bar 134 moves in the direction of the arrow *a*. Hereby, the toothed wheel 159 is brought into engagement with the teeth 177 of the calculating sector 174, by way of the above-described part 137 (Figure 7) 143, 136, 148, 150, 155 and 156. Further, on the displacement of the draw-bar 134 in the direction of the arrow *a*, the shaft 142, and the parts 199, 179, 203, 87*u* (Figure 8) 256 (Fig. 9) 202 and 382 (Figure 12) rigidly connected to it are swung by way of the parts 137, 143, 136 in the clockwise direction (seen in Fig. 7) whereby by means of the release finger 202, the locking lever 469 (Figures 7 and 15) lying opposite to it, is raised and accordingly the calculating place

located in the working position of the column totalizer T7 is unlocked.

In the swinging movement of the shaft 142 in the clockwise direction (Figure 12) the lever 384 fixed to it, is likewise swung in the same direction. As a result of this, the lever 384 acts, by means of its nose 383, on the lever 382, whereby the latter is swung in the clockwise direction. The lever 378*a*, which is in articulated connection with the lever 382, is hereby swung in the anti-clockwise direction against the action of its spring 378c in which swinging movement the shaft 353 and the levers 354 and 369, as well as the release fingers 353*b* and 353*a* participate, whereby the master wheels 362 and 372 are unlocked, and the toothed wheels located in the cross totalizers Q1 and Q2 are released. Since the coupling half 375 (Figure 13) is not in engagement with the coupling half 377 and therefore the driving wheel 372 is not acted upon, the release of the master wheel 372 by the pawl 369 is unimportant.

In the further rotation of the three cams 69 (Figure 5) 71, 72, the roller 168, rotatably mounted on the lever 167, moves from the elevated part of the cam 72, on to the lower part of the same. As a result of this, the draw-bar 170 (Figure 7) is displaced in the direction of the arrow *a* under the action of its spring 171. The incline 173*a*, of the slot 173*x*, of the rod 170, hereby acts on the roller 175 of the calculating sector 174, whereby this is swung in the anti-clockwise direction. Since the teeth 177 of the calculating sector 174, are in engagement with the toothed wheel 159, the driving wheel 362 of the cross totalizer Q1 is rotated in the subtractive direction, by way of the parts 158, 162 (Figure 11) 328, 325, 323 (Figure 13) 378, 376 and 363, and until the number roller of the hundreds place of the cross totalizer Q1, which shows a "1", has moved from "1" to "0" in which case, as already mentioned, a further rotation of this number roller is not possible since the wheel 360 of the next higher decimal place (thousands place) is held fast by the aligning tooth 352 which is locked by the nose 350 (Figure 10) of the slide 342. The calculating segment 174 (Figure 7) will be able, therefore, only to rotate through one unit. Accordingly, the master wheel, 189 is also rotated, by way of the parts 159, 189, 187, 186 likewise only through one unit, whereby in the hundreds decimal place of the column totalizer T7, a "1" is registered.

By the swinging-out movement of the calculating segment 174 through one unit, the lower arm 204 of this segment moves the number key striking yoke 209, 216, 213, forwards through one unit, whereby the number typing key lever 35, corresponding to the value "1" is selected which key is depressed by the cam 71 (Figure 5) by way of the roller 166, lever 165, shaft 87, and arms 222, 219, as hereinbefore described. As a result of the operative of the type bar the paper carriage moves one step to the left. Before, however, the carriage shift takes place, the slide 134 (Figure 7) has moved upwards again and has effected the various locking operations again.

As soon as the paper carriage has moved so that the tens decimal of the column totalizer T7 and of the cross totalizer Q1 have arrived in the working position, the operations—since the key 329 (Figure 10) is held depressed—are repeated, whereby the number roller of the cross totalizer Q1, showing an "8" is moved to zero, while in the tens decimal place of the cross totalizer T7, an "8" appears, and after the number "8" has been typed, the paper carriage again moves one step to the left.

Consequently, the units decimal place of column totalizer T7, and of the cross tota Q1, are in the working position in which the o ations are again repeated. After the "clea of the units decimal place has been compl the paper carriage is moved one stop to the by means of the space key, whereby the te decimal place of the column totalizer T7 ar the cross totalizer Q1, has arrived in the wo position.

Now, the same operations are repeated ir tenths decimal place of the column totalize and of the cross totalizer Q1—as the key 3 still held depressed—whereby the tenths de place of the cross totalizer Q1 moves to zero in the tenths decimal place of the column t izer T7, a "3" is visible.

When in the manner already described column totalizer T7 and the cross totalizer Q now moved so that their hundredths de places are in the working position and the is typed on the paper, a further carriage ste lows.

Consequently, the column totalizer T7 is tioned so that the nose 87*s'* (Figure 8) o lever 87*s*, lies in the space 87*b'* formed b bars 87*t* of the two column totalizers T7 an The lever 87*r*, in consequence of the pull o spring 87*w*, on the rod 87*n*, could thereby in the clockwise direction and the rod 87*n* move downwards. The pin 87*k* of the rod hereby presses on the member 87*j*, whereb rod 87*i* is moved downwards. The lever 8 thereby swung in the anti-clockwise dire whereby the lug 87c of the lever 87*d*, res front of the nose 87*b* of the lever 87*a* and cordingly, a swinging movement of the leve and of the shaft 87 in the clockwise dire is not possible. In consequence of this, the 219 and 222 fixed on the shaft 87 (Figu cannot swing down. A downward moveme the number key striking bar 216, cannot t fore take place. In this case, therefore, th 159 would be superfluous. It must, howev the other hand, be present in order to pro lock for the comma place, in which cas parts controlled by the totalizer bar 87*t* (F 8) take up the position according to Fig in which, locking of the lever 87*a* cannot

Through the swinging movement of the 87*d* round the screw 87*e* in the clockwise tion, the nose 87*d''* of the lever 87*d* (Figu comes into the working position in relation hook 98'' of the bar 98.

When, in the rotation of the cam series 69 the lever 114 is swung by the cam 72 the shaft 68 in the opposite direction to t the arrow "*m*", whereby the parts 111, 1 and 101 are swung in the clockwise directio nose 87*d''* of the lever 87*d* is laid, at the this movement, against the edge 98' of the 98'' of the bar 98, and holds this bar to with the parts 101, 100, 99, 111 fast in this tion. The nose 114*x* of the lever 114 stands in the working position in relation nose 80 of the pawl 74. When, shortly the end of the revolution of the cam ser 71, 69 the cam 69 acts on the lever 12 swings this against the action of the sprin so the part 120c of the locking bar 110 leased. The locking bar 110 is now swun in the clockwise direction on the shaft 99 springs 110*b* which have been tensioned swinging of the parts 110, 100, 97 and 101 clockwise direction. The nose 330*a* (Figu

of the lever 330 hereby released from the limb 110*g* of the locking bar 110, so that the lever 230 of the key 329 (T.Q) can return into its rest position under the action of the spring 338 (Figure 10). Accordingly, the bar 98 also returns into its initial position under the action of the spring 109, whereby the lug 98*x* of the bar 98 can be laid against the stop 103*a* of the bearing member 103, since the projection 330*b* of the lever 330 of the key 329 (T.Q), which in the meantime has been raised, no longer prevents this. At the end of the revolution of the cam series 72, 71, 69 the nose 80 of the coupling pawl 74 is held by the nose 114*x* of the lever 114, whereby the pawl 74 (Figure 5) is disengaged from the wheel 73 and the rotation of the cam series is thus interrupted.

According to the foregoing description, therefore, a totalizer on the machine is automatically cleared at one operation in which the key 329 (T.Q) is automatically held depressed during the clearing operation, and at the termination of the total-taking operation is automatically released again. As soon as the key 329 (Figure 10) is released, the bar 98 (Figure 5) under the section of the spring 109, swing in the anti-clockwise direction round its own pivot axis, whereby the nose 98*x* rests again in front of the projection 103*g*.

The machine therefore clears a totalizer in one operation, whereupon the coupling 69, 71, 72 automatically comes to rest.

Now, the amount "4,30" registered in the cross totalizer Q2, is written out of the same and transferred into the column totalizer T8. To this end, it is again necessary first to depress the corresponding tabulator key in order that the units decimal place of the column totalizer T8 and the units decimal place of the cross totalizer Q2 move into the working position. Then, the TC key 329 (Figure 10) is again depressed and held depressed until the zero of the hundredths decimal place has been typed on the paper. In the depression of the TC key and the writing out of the amount "4,30" from the totalizer Q2 and the registration of the same amount in the column totalizer T8, the same procedure takes place, as in the writing out of the amount "184,30" from the cross totalizer Q1, for which reason this will not be described in detail. If the zero of the hundredths place has been typed on the paper, then a carriage step results whereupon the coupling 69, 71, 72, automatically comes to rest. By the release of the key 329, the clear sign star is printed on the paper in the manner hereinbefore described.

Now, let it be assumed that at the end of the week or at the end of the month, the amounts registered in the column totalizers T1 to T8 are to be written out. To this end, the carriage return key is first depressed, whereby the paper carriage moves into its extreme right-hand position. Then, by means of the tabular key, the carriage is moved to the left, until the hundreds place of the column totalizer T1 is located in the working position. It may still be remarked that the cross totalizers Q1 and Q2 are held by a locking lever 500 in their left-hand position and are thereby prevented from participating in the movement of the column totalizers concerned, by way of the coupling device S1 and S2 (Figure 1). Now the TV-key, 226*a'* (Figure 9) is depressed, whereby, by way of the parts hereinbefore described, the pawl 74 (Figure 5) moves into engagement with the toothed wheel 73, and the three cams 69, 71, 72, participate in the revolutions of the shaft. In this case, also the pawl 74, remains in engagement with the toothed wheel 73, as long as the key lever 226 is held depressed, since in consequence of the face 226*a* (Figure 9) of the key lever 226, the part 114*x* (Figure 5) of the lever 114, cannot enter into the path of movement of the nose 80 of the pawl 74, and the nose 74*a* of this pawl cannot be brought out of engagement with the toothed wheel 73.

On the depression of the key lever 226 (Figure 9) the face 226*c*, acts on the face 227 of the lever 229, and swings the same in the anti-clockwise direction, whereby the rod 235 is moved downwards in the direction of the arrow *a* against the action of the spring 240, which engages with the arm 239*a* of the lever 239. Since the lever 239 is in connection with the rod 235, the three-armed lever 239 is swung around its axis 239*x* in the anti-clockwise direction. In this movement, the locking member 250, fixed to the arm 239*b*, moves so that it lies under the part 252 of the aligning tooth 253, so that this is held in engagement with the teeth of the driving wheels 188 of the column totalizer T1 to T8 lying opposite to it for the time being.

In consequence of the downward movement of the rod 235, the lever 238 connected with it and rigidly mounted on the shaft 192, as well as the shaft 192, are swung in the anti-clockwise direction. Since the lever 193 is likewise rigidly mounted on the shaft 192, this is also swung in the same direction. By the swinging movement of the lever 193, the toothed wheel 180 (Figures 9 and 8) is moved out of engagement with the toothed wheel 187, whereby the rotational movement, in consequence of cutting out the intermediate drive 181, 183, is transmitted directly on to the main driving shaft 186 and accordingly the column totalizers T1 to T8 are acted on in the subtractive sense.

On the rotation of the three cams 69 (Figure 5) 71, 72, first the toothed wheel 159 is moved into engagement with the teeth 177 of the calculating sector 174, by way of the parts 69, 132, 133, 134, 137 (Figure 7) 143, 136, 148, 150 and 156. Further, the shaft 142 and the parts 199, 179, 203, 87*u* (Figure 8), 256 (Figure 9), 202 and 382 (Figure 12) rigidly mounted thereon, are rotated in the clockwise direction by way of the parts 134, 137, 143, 136.

Moreover, in the swinging movement of the shaft 142, in the clockwise direction (Figure 12) the lever 384 is swung in the same direction, whereby the levers 354 and 369 as well as the release fingers 353*b* and 353*a*, are swung in the anti-clockwise direction by way of the parts 381, 378*a*. This is, however, unimportant, since the cross totalizers Q1 and Q2, as previously mentioned, are not located in the working position.

On the further rotation of the three cams 69, 71 and 72, the calculating sector 174 is swung in the anti-clockwise direction by means of the cam 72 and by way of the parts 168, 167, 170 (Figure 7), 173, 175 and since the toothed wheel 159 is in engagement with the teeth 177, of the calculating sector 174, the master wheel 189, of the column totalizer T1, is rotated from "2" to "0" by way of the parts 158, 130, 187 and 186. Further rotation of the wheel 188 of the hundreds place is not possible for the reasons hereinbefore described. By the swinging-out of the calculating segment 174, the number key striking yoke 206, 216, 213 is simultaneously moved forwards through two units whereby the number

key lever corresponding to the value "2" is moved by the cam **71** (Fig. 6) by way of the roller **166** and lever **165** and the "2" is typed on the paper. Hereupon, follows a carriage step to the left.

On writing out the remaining figures from the column totalizer T1 and the values out of the remaining column totalizers T2 to T8, the same operations take place. If one of the column totalizers T1 to T8 is to be cleared, so the coupling **69**, **71**, **72** comes automatically to rest in the manner described on taking the total from the cross totalizer Q1. If the TV-key **226***a'* (Figure 9) is then released so the slide **235**, under the action of the spring **240**, engaging with the lever **239**, is moved upwards, whereby the lever **239**, is swung in the clockwise direction round its pivot. In this movement, the lever **239**, acts on the key lever **263**, and swings the same downwards against the action of its spring, whereby the clear star is printed by way of the parts **267**, **271**, **272**, **275**, **273**, **288***a*. The corresponding tabulator key is then depressed, whereby the next totalizer T2, is brought into the working position. Thereupon, the TV-key is again depressed, whereby the same operations, as already described, are repeated. This procedure is carried out until all the column totalizers T1 to T8 register zero. As arises from a comparison of Figure 10, in the taking of totals and sub-totals, the aligning tooth **253**, which is held locked by the part **250** (Figure 10) in the unlocking process, i. e. in the rotation of the shaft **142** in the clockwise direction, is swung by the pin-slot connection **255**, **257** in the clockwise direction, whereby its tooth **260** acts on the driving wheel **188**, standing in engagement with it, in th clockwise direction, i. e. in the arrow d *x* (Figures 3 and 16). By this means t avoidable small clearance (or back lash) play of the wheel is overcome, so that if th ing wheel **189** (Figures 3 and 9) located lower decimal place is rotated in the arrow tion *x*1, the clearance does not work out feeling direction. When, therefore, e. wheel **188**H (Figures 3 and 9) has been what rotated in the arrow direction *x* aligning tooth **253**, **260**, in engagement so the transfer wheel, **475**, **474**, **473**, in ment with it has been slightly rotated arrow direction Z. If now, the wheel rotated by the driving wheel **189**, (Figure 9), in the arrow direction *x*2, so the ter tooth **464** (Figures 3 and 9) of the part the wheel **188***z*, on striking the tooth lyin path of the wheel **475** of the transfer wh **474**, **473**, no longer meets with clearanc was previously removed by the small rota the aligning tooth. The result of this is, t number roller **481**, by way of the wheels **480**, standing in engagement with the whe brings its "0" exactly opposite to the ins aperture **481***x* (Figures 3 and 9). If t rangement is not provided then in the tion aperture **481***x*, only half of the "0" a of the "9" is visible which is naturally u able.

The aligning teeth **352** (Figure 10) a for the cross totalizers Q1 and Q2, act ob in the same manner.

HUGO ERNST KÄM

PUBLISHED

MAY 25, 1943.

BY A. P. C.

H. E. KÄMMEL

LOCKING MECHANISM FOR TYPEWRITING CALCULATING MACHINES

Original Filed May 14, 1934

Serial No. 287,669

14 Sheets-Sheet 1

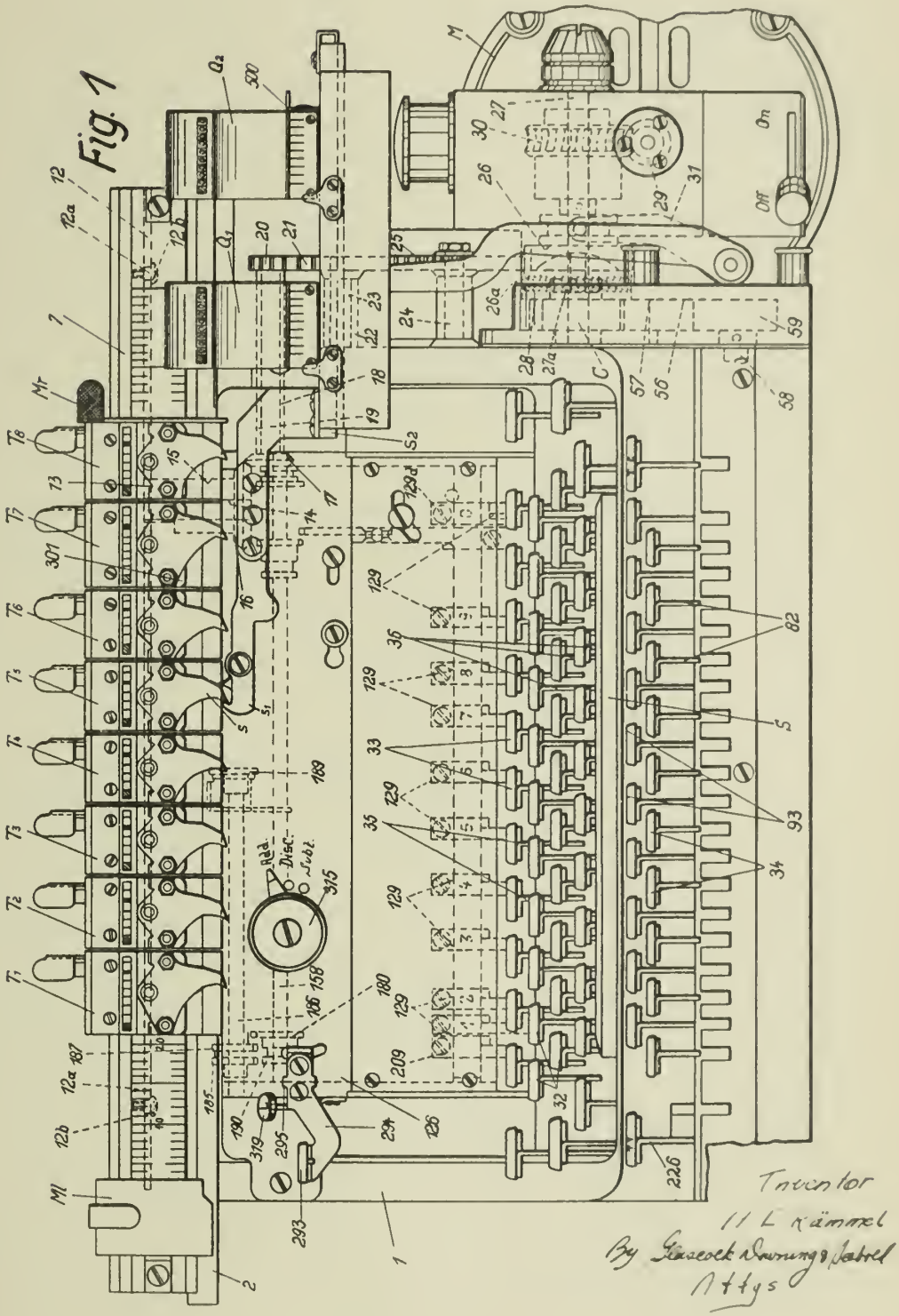

Inventor
H. E. Kämmel
By Glascock Downing & Seebold
Attys

PUBLISHED

MAY 25, 1943.

BY A. P. C.

H. E. KÄMMEL

LOCKING MECHANISM FOR TYPEWRITING CALCULATING MACHINES

Original Filed May 14, 1934

Serial No. 287,669

14 Sheets-Sheet 2

Fig. 2

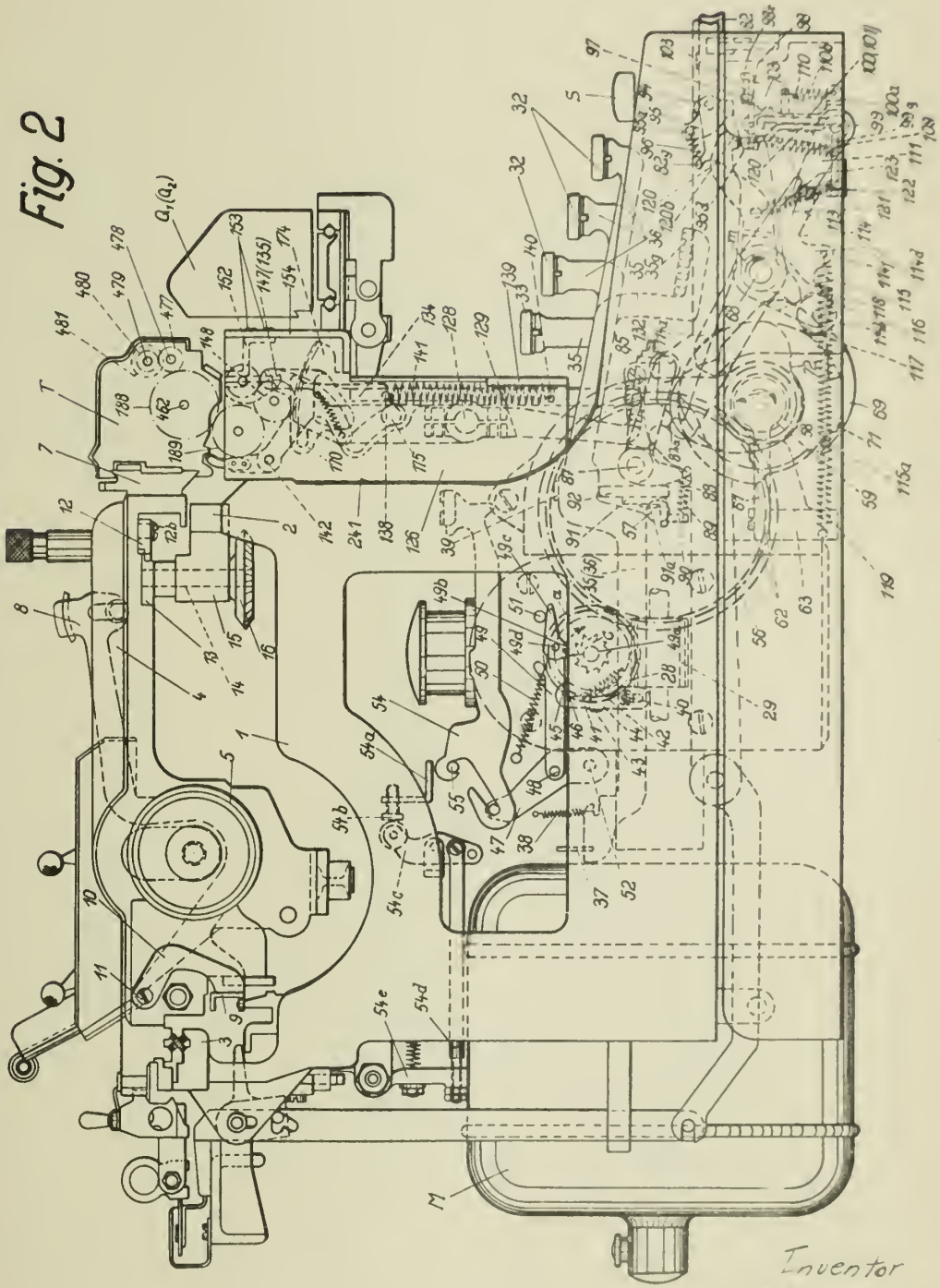

Inventor
H. E. Kämmel
By Fisserck Downing & Serrell
Attys

PUBLISHED

MAY 25, 1943.

BY A. P. C.

H. E. KÄMMEL

LOCKING MECHANISM FOR TYPEWRITING CALCULATING MACHINES

Original Filed May 14, 1934

Serial No. 287,669

14 Sheets-Sheet 3

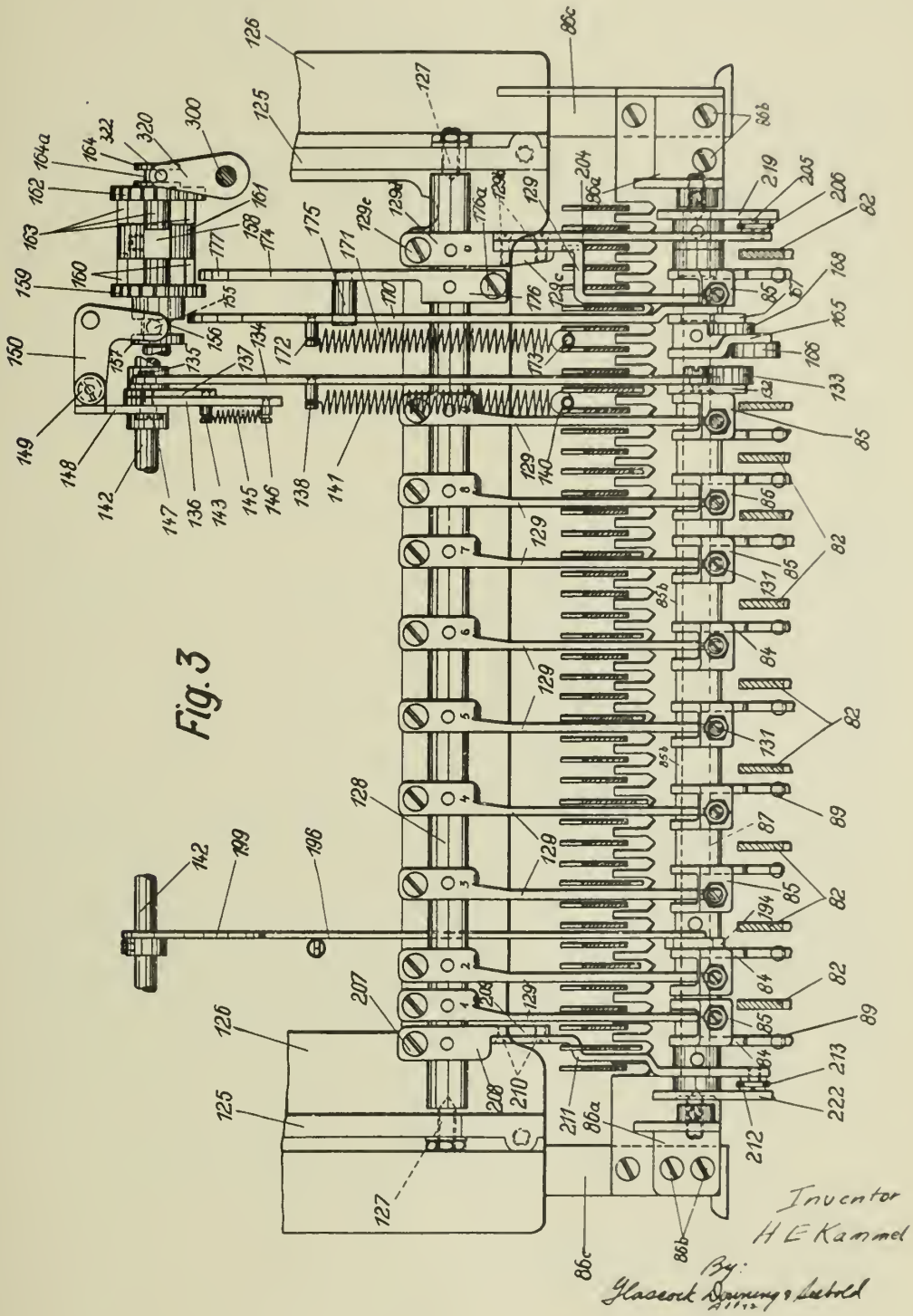

Fig. 3

Inventor
H E Kammel
By:
Glascock Downing & Seebold
Attys.

PUBLISHED

MAY 25, 1943.

BY A. P. C.

H. E. KÄMMEL
LOCKING MECHANISM FOR TYPEWRITING
CALCULATING MACHINES
Original Filed May 14, 1934

Serial No.
287,669

14 Sheets-Sheet 4

Fig. 4

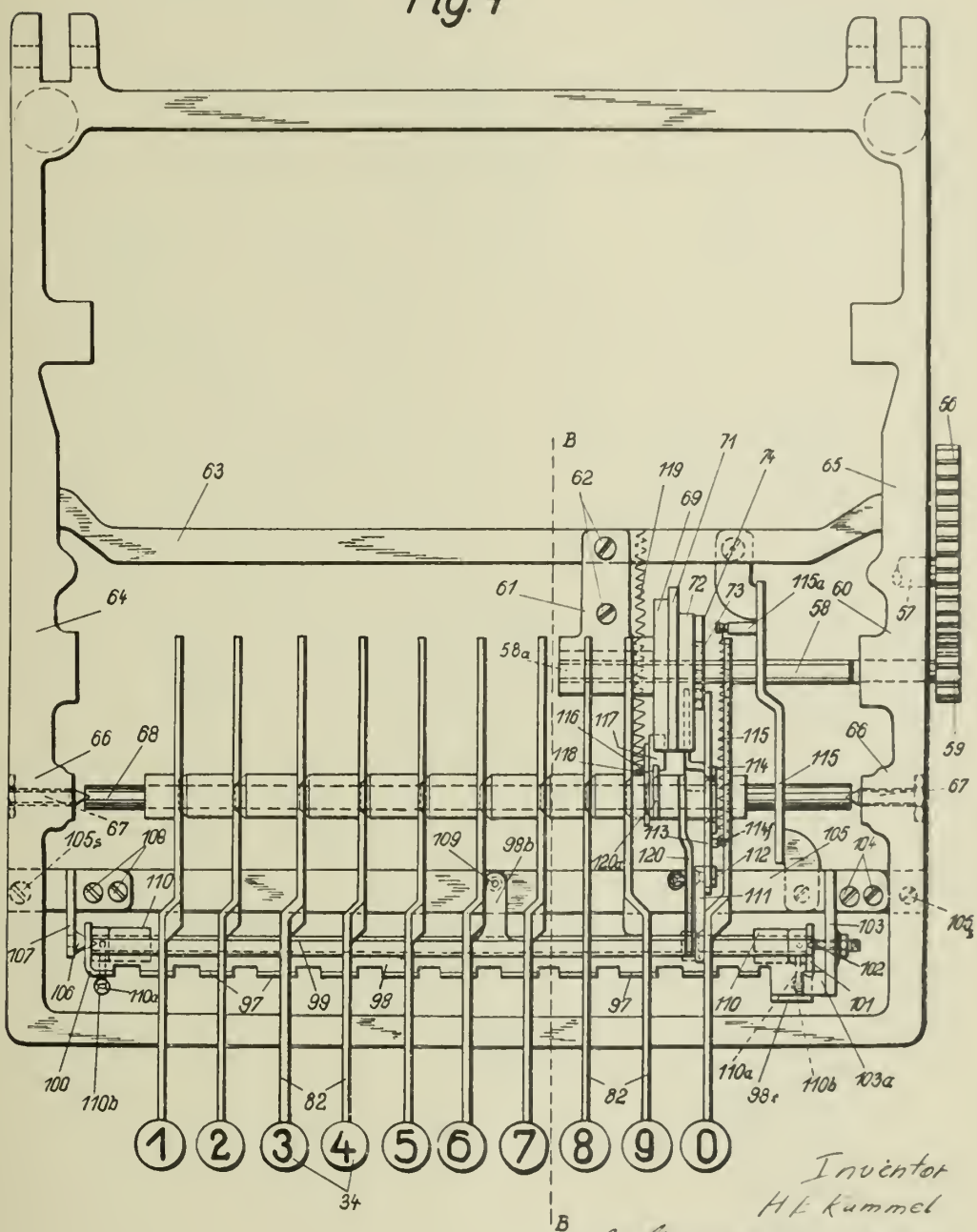

Inventor
H E Kämmel
By: Glascock Downing & Seebold
Attys

PUBLISHED

MAY 25, 1943.

BY A. P. C.

H. E. KÄMMEL

LOCKING MECHANISM FOR TYPEWRITING CALCULATING MACHINES

Original Filed May 14, 1934

Serial No. 287,669

14 Sheets-Sheet 5

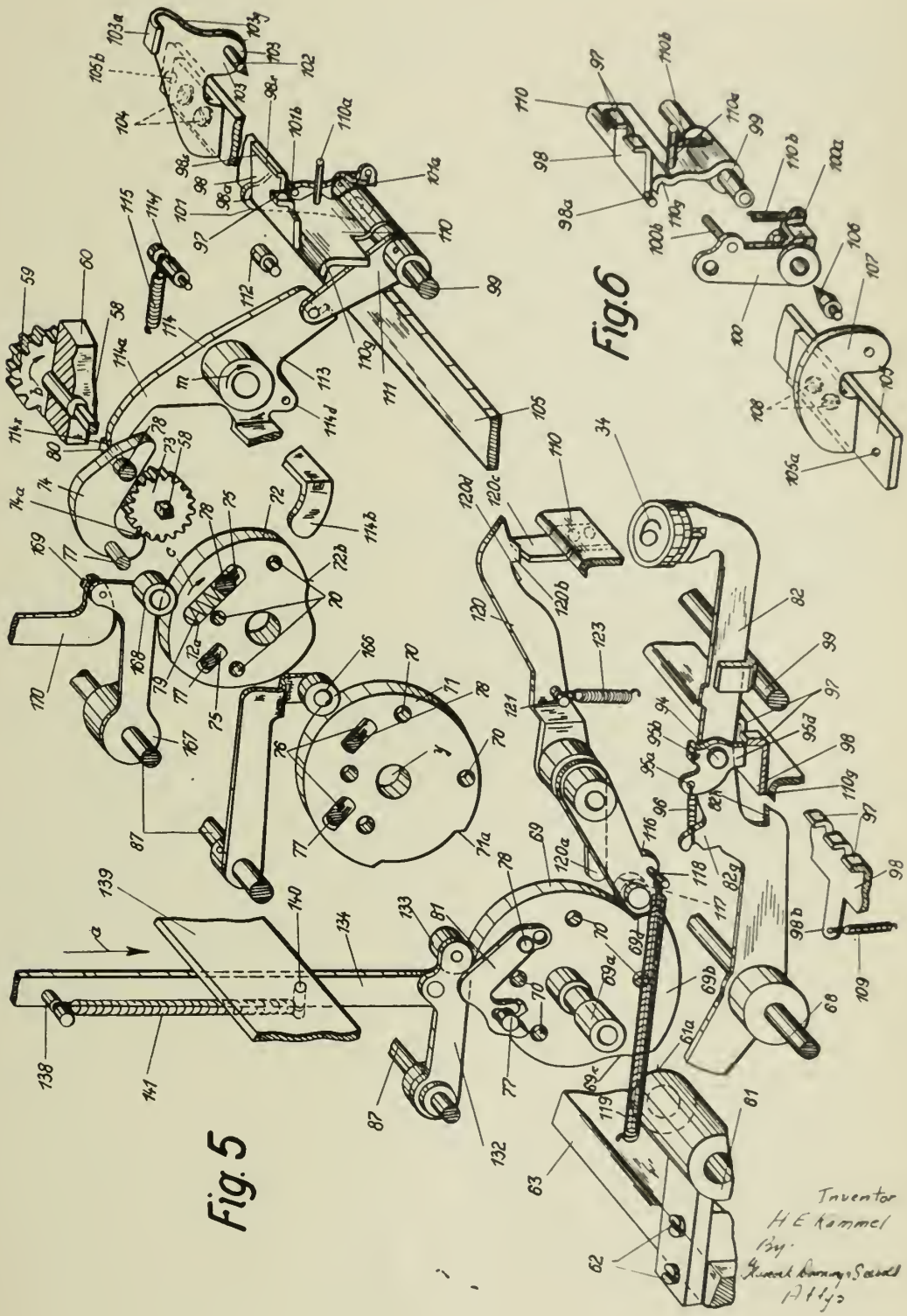

PUBLISHED

MAY 25, 1943.

BY A. P. C.

H. E. KÄMMEL

LOCKING MECHANISM FOR TYPEWRITING CALCULATING MACHINES

Original Filed May 14, 1934

Serial No. 287,669

14 Sheets-Sheet 6

Fig. 7

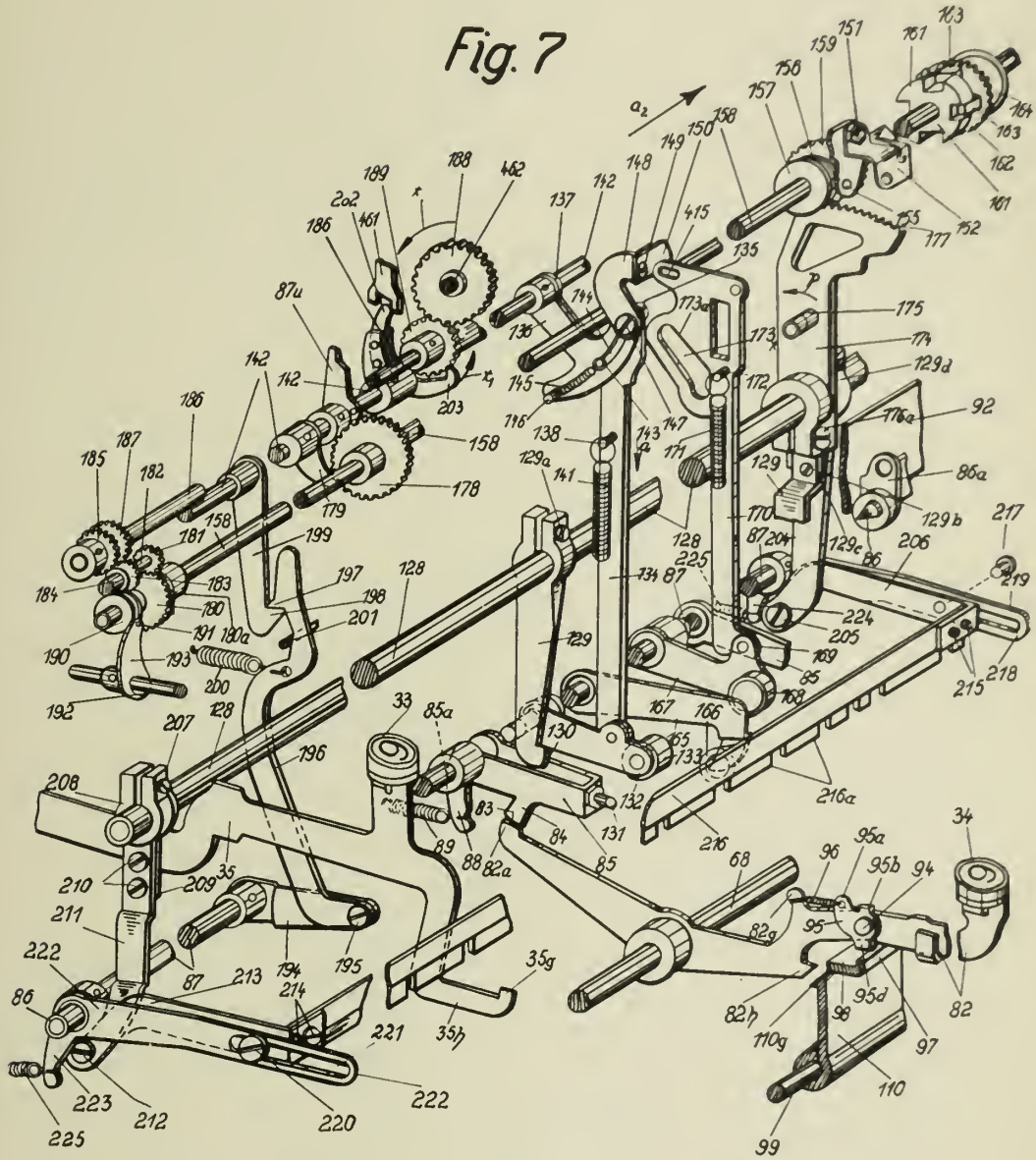

Inventor:
H. E. Kämmel
By: Glascock Downing & Seebold
Attys.

PUBLISHED

MAY 25, 1943.

BY A. P. C.

H. E. KÄMMEL
LOCKING MECHANISM FOR TYPEWRITING
CALCULATING MACHINES
Original Filed May 14, 1934

Serial No.
287,669

14 Sheets-Sheet 7

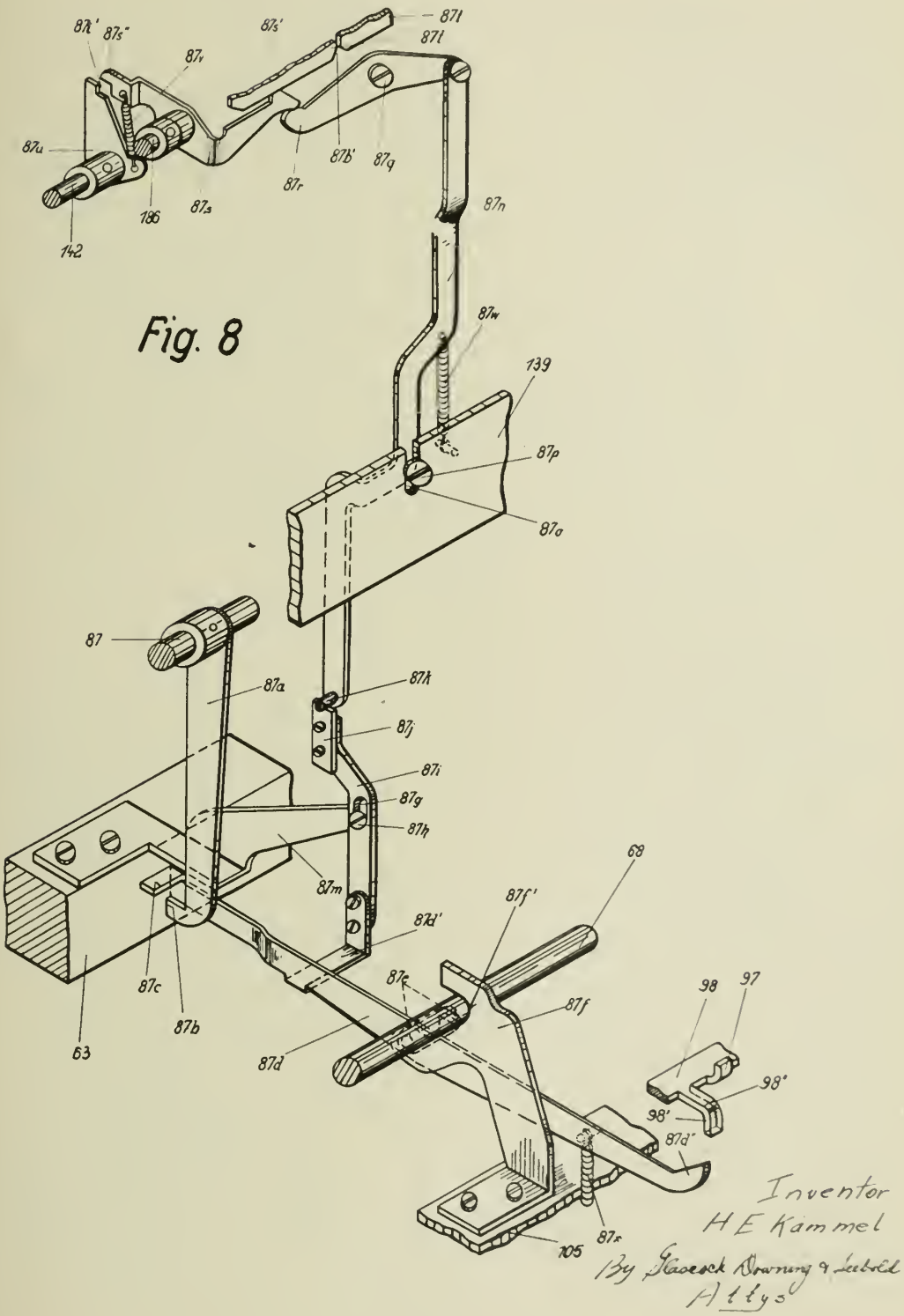

Fig. 8

Inventor
H E Kämmel
By Glaesch Brauning & Leibold
Attys

PUBLISHED

MAY 25, 1943.

BY A. P. C.

H. E. KÄMMEL
LOCKING MECHANISM FOR TYPEWRITING
CALCULATING MACHINES
Original Filed May 14, 1934

Serial No.
287,669

14 Sheets-Sheet 8

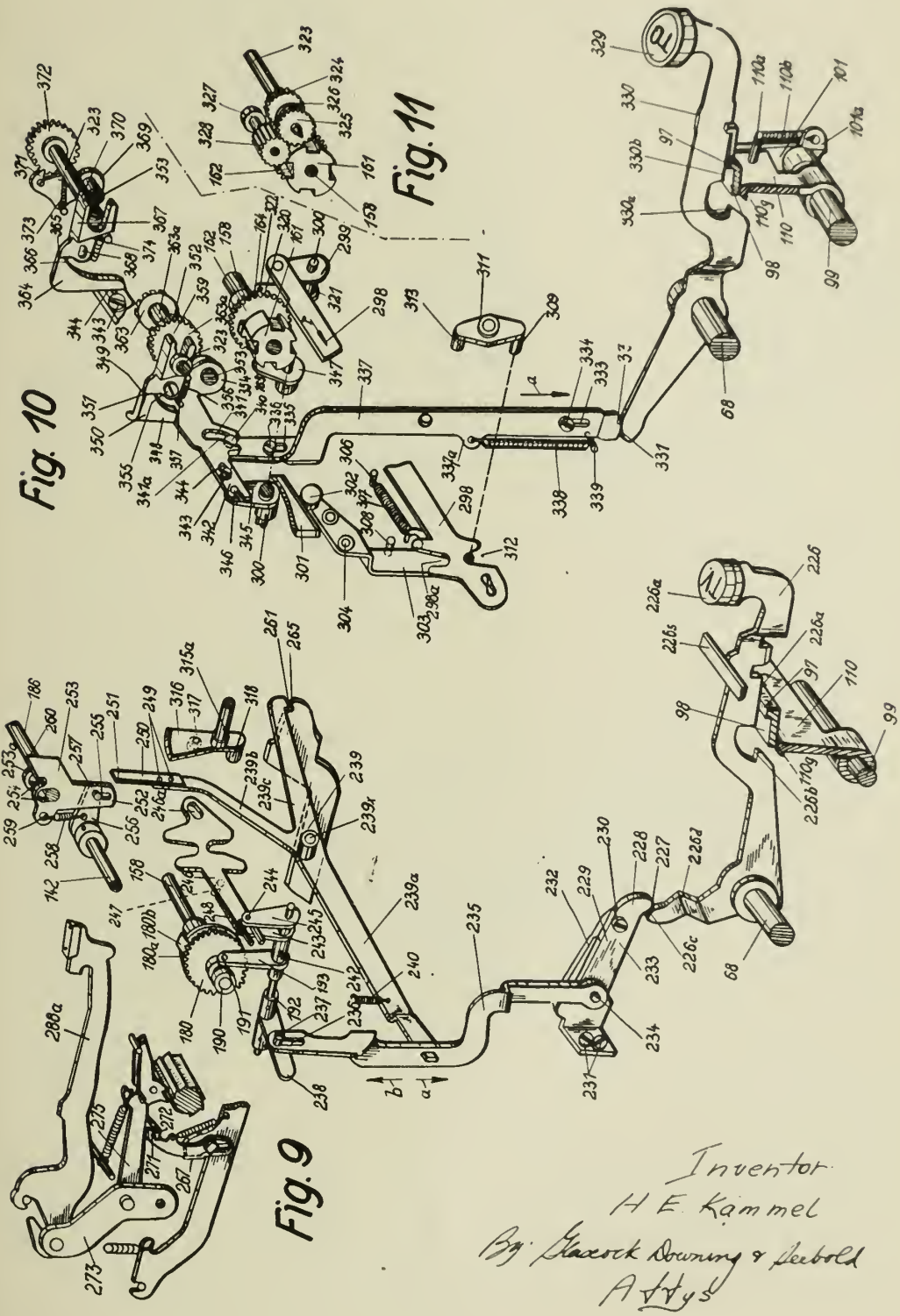

Inventor
H E Kämmel
By Glascock Downing & Seebold
Attys

PUBLISHED

MAY 25, 1943.

BY A. P. C.

H. E. KÄMMEL
LOCKING MECHANISM FOR TYPEWRITING
CALCULATING MACHINES
Original Filed May 14, 1934

Serial No.
287,669

14 Sheets-Sheet 9

Fig. 12

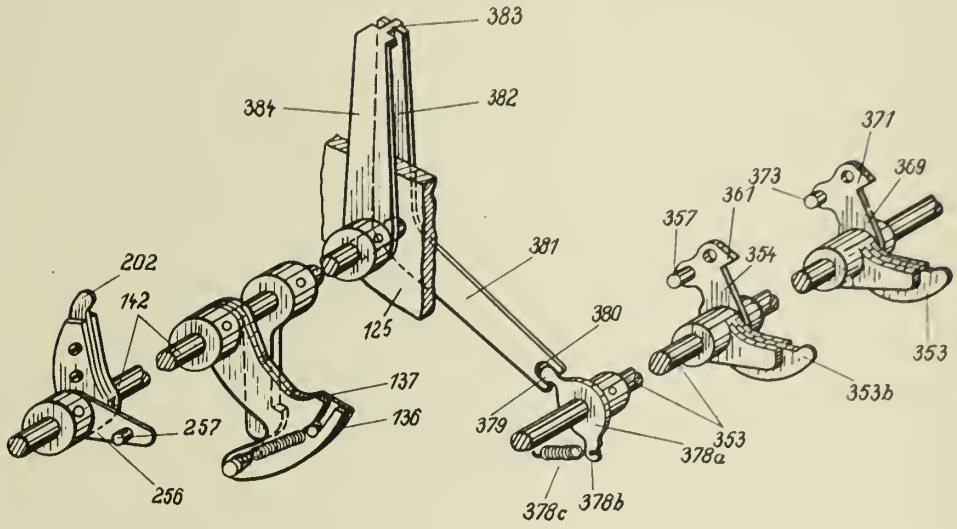

Fig. 13

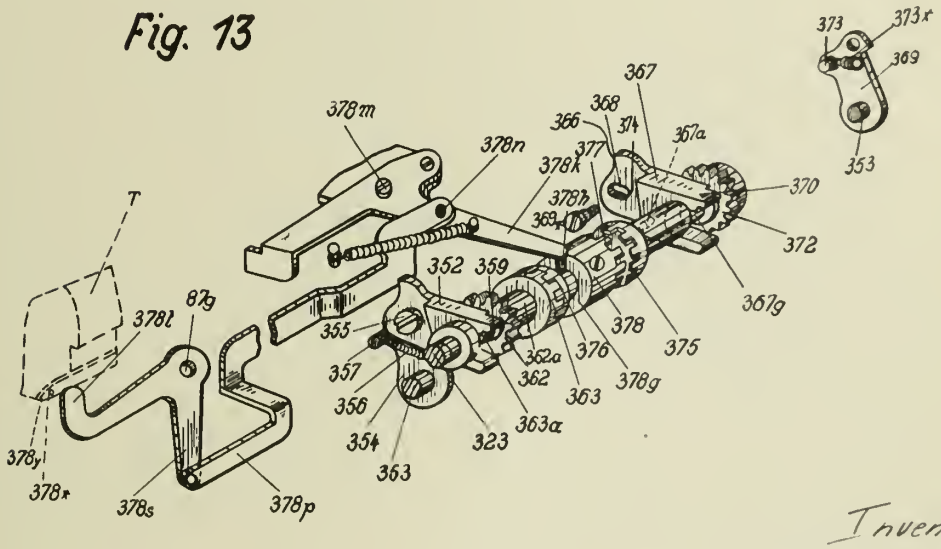

Inventor.
H. E Kämmel
By Glascock Downing & Seebold
Attys.

PUBLISHED

MAY 25, 1943.

BY A. P. C.

H. E. KÄMMEL

LOCKING MECHANISM FOR TYPEWRITING CALCULATING MACHINES

Original Filed May 14, 1934

Serial No. 287,669

14 Sheets-Sheet 10

Fig. 14

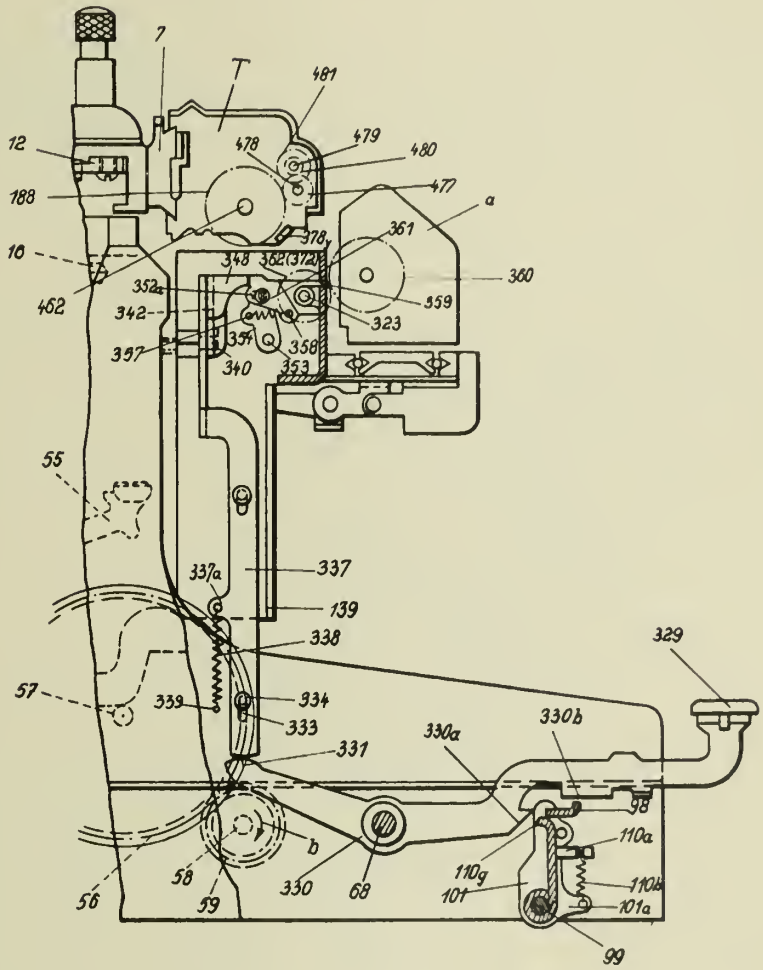

Inventor:
H. E. Kämmel
By: Glascock Downing & Seebold
Attys.

PUBLISHED

MAY 25, 1943.

BY A. P. C.

H. E. KÄMMEL
LOCKING MECHANISM FOR TYPEWRITING
CALCULATING MACHINES
Original Filed May 14, 1934

Serial No.
287,669

14 Sheets-Sheet 11

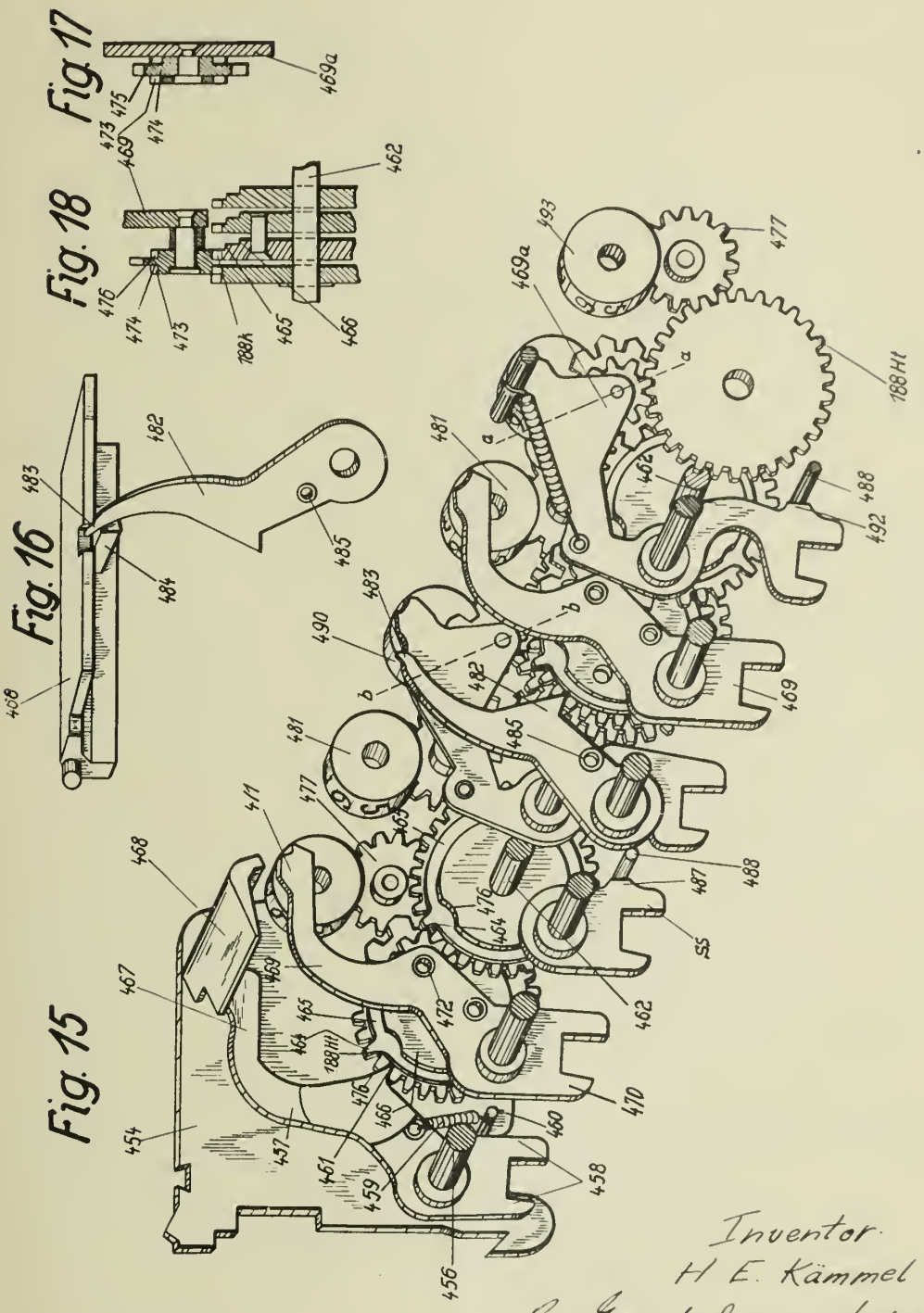

Inventor
H. E. Kämmel
By Glascock Downing & Seebold
Attys

PUBLISHED

MAY 25, 1943.

BY A. P. C.

H. E. KÄMMEL
LOCKING MECHANISM FOR TYPEWRITING
CALCULATING MACHINES
Original Filed May 14, 1934

Serial No.
287,669

14 Sheets-Sheet 12

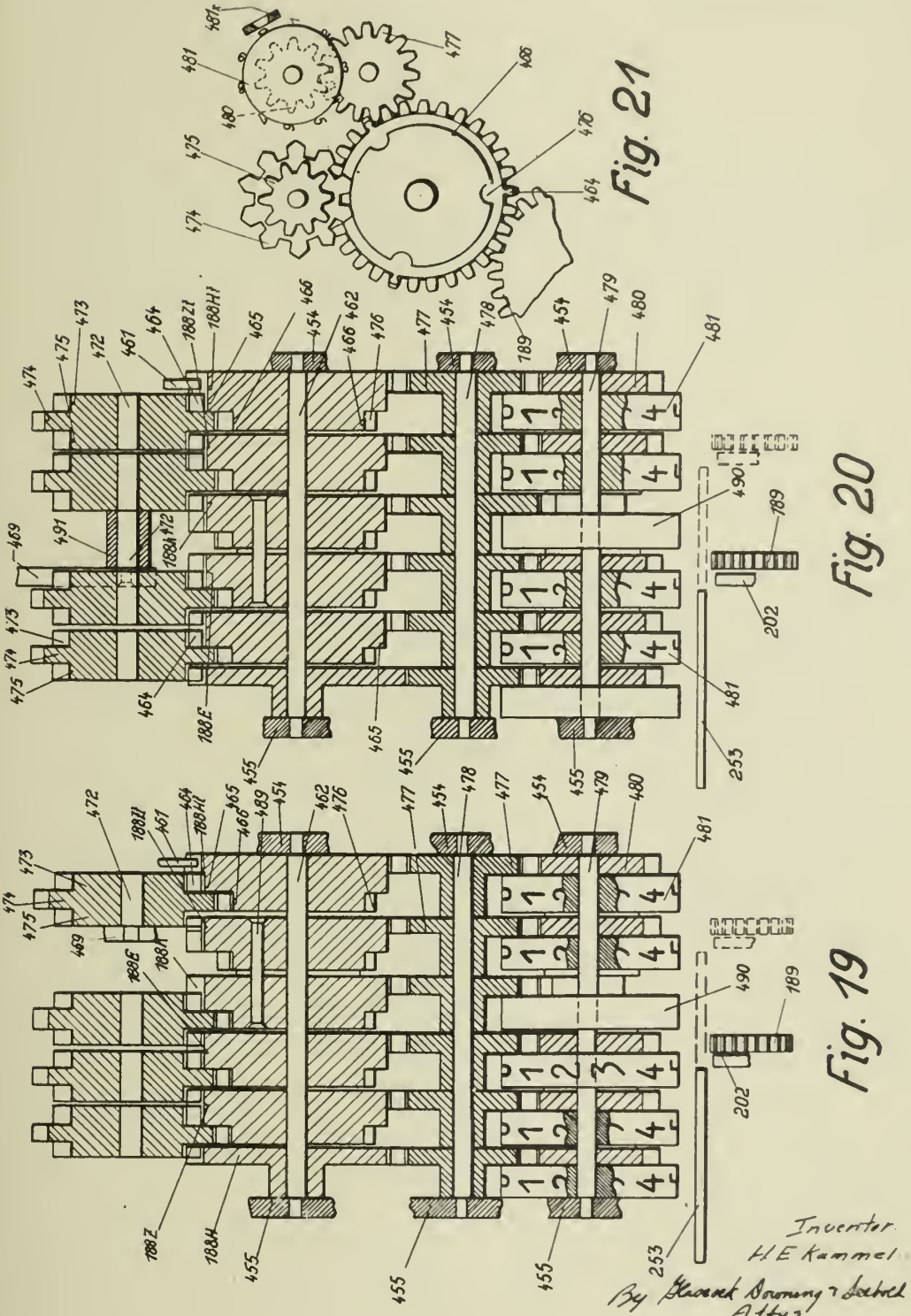

Fig. 22

1	2	3	4	5	6	7	8	9	10	11
Name	Nº	Month	Gross salary.	Taxis.	Sick fund.	Assurance for employees	Supple-ments.	Remainder	Net-salary.	Sum of all supple ments
O.Schmidt	15	May.	200.-	10.00	6.00	4.00	3.75	0.55	184.30*	4.30*

Fig. 23

Typing line	Col	No. Column Totalizer	Reading. Column Totalizer.	Type of Calc. Cross-Totlr. Q1.	Type of Calc. Cross-Totlr. Q2.	Reading Cross Totalizer Q1.	Reading Cross Totalizer Q2	Clear sign from Cross Totalizer.
I	1 to 3	Name, number and month have to be registered						
I	4	T_1	200.00	A	E	200.00	Zero	
I	5	T_2	10.00	S	E	190.00	Zero	
I	6	T_3	6.00	S	E	184.00	Zero	
I	7	T_4	4.00	S	E	180.00	Zero	
I	8.	T_5	3.75	A	A	183.75	3.75	
I	9	T_6	0.55	A	A	184.30	4.30	
I	10	T_7	184.30	S	E	comes to zero.	4.30	Q1
I	11	T_8	4.30	E	S	Zero.	comes to zero.	Q2

Inventor
H E Kämmel
By Glasock Downing & Seebold
Attys

PUBLISHED

MAY 25, 1943.

BY A. P. C.

H. E. KÄMMEL
LOCKING MECHANISM FOR TYPEWRITING
CALCULATING MACHINES
Original Filed May 14, 1934

Serial No.
287,669

14 Sheets-Sheet 14

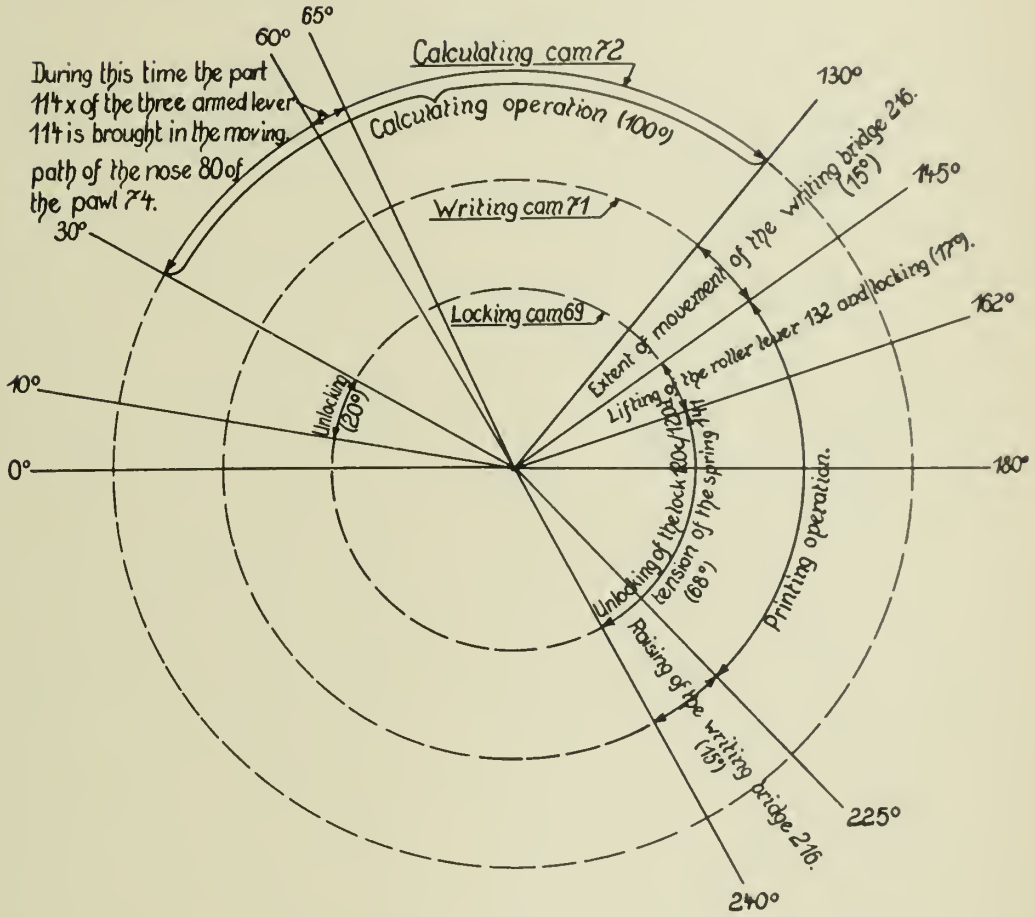

Fig. 24

Inventor:
H. E. Kämmel
By: Glascock Downing & Seebold
Attys.

Published May 25, 1943

Serial No. 287,671

ALIEN PROPERTY CUSTODIAN

REGISTER FOR TYPEWRITING CALCULATING MACHINES

Hugo Ernst Kämmel, Zella-Mehlis, Germany; vested in the Alien Property Custodian

Application filed July 31, 1939

The invention relates to a register for typewriting calculating machines with total taking mechanism of the type exemplified in my copending application Ser. No. 725,636, filed May 14, 1934 and of which the present application is a division.

The register disclosed in the present specification is one of that kind in which a numeral wheel while being reset to zero is arrested in its zero position through the intermediary of its tens transfer device by the locked numeral wheel of the next higher denomination.

Such devices have previously been known. They had however the disadvantage that the highest decimal place of the register could not be used for total-taking because there was no device for arresting the resetting movement of the numeral wheel of highest denomination.

According to the invention these disadvantages are now obviated in that a driving member of the highest decimal place of the register is provided with parts, which limit the rotational movement of the driving member.

In the drawings two examples of construction of the subject of the invention are illustrated as applied to a Mercedes Addelectra typewriting calculating machine.

Figure 1 shows a perspective illustration of a totalizer viewed from the rear, in which view the detail parts are illustrated in a condition separated from one another.

Figure 2 shows a cross section through the totalizer, in which view for the sake of better apprehension the individual wheels, with their shafts, are disposed in one plane.

Figure 3 shows an elevation of the wheel gear for the numeral wheels of the highest place, viewed in the direction of the arrow in Fig. 2.

Figure 4 shows a perspective illustration of the driving wheel of the highest place of the totalizer represented in Figure 2.

Figure 5 shows an elevation of a further form of construction of the driving wheel of the highest place of a totalizer.

Figure 6 shows a side elevation in relation to Figure 5.

Figure 7 shows a perspective illustration of a locking lever with locking flap, viewed from the left hand edge of the rear side of the totalizer.

Totalizer mechanisms

On a shaft **456** (Figure 1) rigidly mounted in the two side walls **454** and **455** (Figures 1 and 2), a lever **457** is swingably mounted in the lowest decimal place, and is formed with its lower end of fork-shape. The release lever, **202** (Figure 1) is capable of engaging in the fork-shaped part **458**, and of acting on the lever **457**. With the lever **457** there engages a spring **459**, which on the other hand is connected to a shaft **460** mounted in the two side walls **454** and **455** of the column totalizer. The spring **459** acts on the lever in the clockwise direction round the shaft **456**, whereby its normal position is determined by the tooth **461** of the lever **457** being in engagement with the 30 tooth toothed wheel **188** H*t* rotatably mounted on the shaft **462**.

With the toothed wheel **188** H*t* (Figures 1 and 2) of the lowest decimal place, a disc **465** provided with three tens-shift teeth **464** and a disc **466**, are rigidly connected. The three parts **188** H*t*, **465** and **466**, are produced from a single piece and consequently represent a single element. The nose **467** provided on the upwardly-directed free end of the lever **457** (Figure 1) is capable of acting on a flap **468** rockably mounted in the two side walls **454** and **455**.

To the right of the lever **457** (as seen in Figure 1) there is a lever **469** swingably mounted on the shaft **456**. The downwardly directed limb **470** of the lever **469**, is of fork-shape, and is capable of co-acting likewise with the release finger **202** above mentioned. The nose **471**, of the lever **469**, co-acts likewise with the flap **468**. On the lever **469**, a transfer wheel is rotatably mounted by means of a headed rivet **472** (Figure 1), the transfer wheel consisting of a ten-tooth toothed wheel **473**, a ten-toothed Maltese wheel **474** and a ten-tooth toothed wheel **475**, produced from a single piece, of which the toothed wheel **473**, is capable of co-acting with the three-toothed tens-shift disc **465**, and the Maltese wheel **474**, with the locking disc **466**. The disc **466** is provided with three notches **476**, for the free passage of the teeth of the Maltese wheel.

The toothed wheel **188** H*t*, is, further, in engagement with a toothed wheel **477** (Figures 1 and 2) which is loosely rotatable on a shaft **478**, rigidly mounted in the two side walls **454** and **455** of the column totalizer. The toothed wheel **477**, again, is in engagement with the toothed wheel **480**, loosely rotatable on the shaft **479**, which is rigidly mounted in the two side walls **454** and **455** of the column totalizer. A number roller **481** is rigidly connected with the toothed wheel **480**. The toothed wheel, **475**, associated with the lowest decimal place of the hundredths decimal place, is in engagement with the wheel **188** Z*t* of the tenths decimal place. The parts above described for the hundredths decimal place are

similar for the tenths, units, tens etc. decimal places. In the following therefore only the differences will be pointed out.

By means of a lever **482** (Figures 1 and 7) swingably mounted on the shaft **456**, of which lever the nose **483** (Figures 1 and 7) acts on a part **484**, arranged on the flap **468**, the flap **468** is held swung in the anti-clockwise direction (seen in Figure 1), whereby its rest position is determined by contact of the noses **467**, **471** of the levers **457**, **469** on the one hand, and, on the other hand, by contact of the nose **461** of the lever **457**, in the tooth spaces of the toothed wheels **188**. The lever **482**, moreover, is held swung in the clockwise direction (seen in Figure 1) by means of a spring (not illustrated) which engages with the hole **485** of the lever **482**.

Since in the pointing off-place of the column totalizer, which is in working position, no transfer into this column totalizer is permitted to take place, because when the pointing off-place of the column totalizer is opposite the master wheel **189** co-acts with the part S (Fig. 1) swingably mounted on the shaft **456** of the column totalizer, in such a manner that the projection **487** of part S comes to lie against the shaft **488**, fixed in the side walls **454**, **455** of the totalizer. Consequently the release finger **202** is prevented from swinging outwardly, and the calculating mechanism being locked.

The driving wheel **188H** of the highest place of the totalizer is further provided with three lateral elongated teeth **188H'** corresponding to the teeth **464** of the wheels **188H***t*, **188Z***t* etc. By this arrangement the calculating and total taking of values in the highest place is possible. A recess **455***g* (Fig. 2) in the side wall **455** of the totalizer admits the free movement of the elongated teeth **188H'** of the driving wheel **188H** of the highest place, so that the driving wheel **188H** may be rotated on the shaft **462**. The wheels **473**, **474**, **475** for the highest place of the totalizer are likewise arranged on a lever **469***a*.

By abutment of the aligning tooth **260** of the part **253** with one of the elongated teeth **188H'** of the driving wheel **188H** of the highest place the rotation of the wheel **188H**, is arrested as soon as the numeral wheel **481** of the highest place shows the digit "0", whereby total taking from the highest place of the totalizer is allowed.

Operation of the totalizer

During the automatic total taking, the carriage, on which the totalizers are arranged, is step by step from right to left.

Next of all, the paper carriage is, by dep of a tabulating key or the space key, broug the position in which the toothed circum of the wheel **188H** is opposite to the main wheel **189**. The aligning tooth **260** of t **253** is now within the reach of the three el teeth **188H'** of the driving wheel **188H**, wh arranged corresponding to the tens shiftin **464** of the wheels **188H***t*, **188Z***t* etc., wher release finger **202** releases the driving wh **474**, **475** of the highest place in the well manner as fully described in U. S. 1.270.471. Hereby the wheel **188H** may be back by the main driving wheel **189**, ur of the elongated teeth **188H'** of the whe comes to lie against the aligning tooth the part **253**, whereby a zero is visible peephole of the totalizer casing. Hereu paper carriage (not illustrated) is autom moved one step to the left, so that now th ing tooth **260** of the part **253** is in enga with the toothed circumference of the wheel **188H** and locks the same, whereby lease finger **202** releases the wheel **473**, with the lever **470** associated with the wheel **188Z**, while the main driving whee in engagement with said driving wheel **1**

Hereby the driving wheel **188Z** may turned until the tens shift tooth **464** of th **188Z** abuts against a transmitting tooth the wheel **473**, **474**, **475** of the highest which since it meshes with driving whee which is locked by the aligning tooth **26** part **253**, is also prevented from rotation the zero of the numeral wheel **481** associat the driving wheel **188Z** is visible in the p of the totalizer.

Owing to this arrangement, the highe mal place may be used for usual calculati poses as well as for total taking.

With the modification according to Fi and 6 open tooth spaces **188HL** are us regard to which the aligning tooth **260** yieldingly arranged in lateral direction, it may run on to the part **188HQ** and sn a tooth space **188HL** thus locking the whe in the position in which the appertaini meral wheel shows a zero.

HUGO ERNST KÄM

Published May 25, 1943

Serial No. 287,671

ALIEN PROPERTY CUSTODIAN

REGISTER FOR TYPEWRITING CALCULATING MACHINES

Hugo Ernst Kämmel, Zella-Mehlis, Germany; vested in the Alien Property Custodian

Application filed July 31, 1939

The invention relates to a register for typewriting calculating machines with total taking mechanism of the type exemplified in my copending application Ser. No. 725,636, filed May 14, 1934 and of which the present application is a division.

The register disclosed in the present specification is one of that kind in which a numeral wheel while being reset to zero is arrested in its zero position through the intermediary of its tens transfer device by the locked numeral wheel of the next higher denomination.

Such devices have previously been known. They had however the disadvantage that the highest decimal place of the register could not be used for total-taking because there was no device for arresting the resetting movement of the numeral wheel of highest denomination.

According to the invention these disadvantages are now obviated in that a driving member of the highest decimal place of the register is provided with parts, which limit the rotational movement of the driving member.

In the drawings two examples of construction of the subject of the invention are illustrated as applied to a Mercedes Addelectra typewriting calculating machine.

Figure 1 shows a perspective illustration of a totalizer viewed from the rear, in which view the detail parts are illustrated in a condition separated from one another.

Figure 2 shows a cross section through the totalizer, in which view for the sake of better apprehension the individual wheels, with their shafts, are disposed in one plane.

Figure 3 shows an elevation of the wheel gear for the numeral wheels of the highest place, viewed in the direction of the arrow in Fig. 2.

Figure 4 shows a perspective illustration of the driving wheel of the highest place of the totalizer represented in Figure 2.

Figure 5 shows an elevation of a further form of construction of the driving wheel of the highest place of a totalizer.

Figure 6 shows a side elevation in relation to Figure 5.

Figure 7 shows a perspective illustration of a locking lever with locking flap, viewed from the left hand edge of the rear side of the totalizer.

Totalizer mechanisms

On a shaft **456** (Figure 1) rigidly mounted in the two side walls **454** and **455** (Figures 1 and 2), a lever **457** is swingably mounted in the lowest decimal place, and is formed with its lower end of fork-shape. The release lever, **202** (Figure 1) is capable of engaging in the fork-shaped part **458**, and of acting on the lever **457**. With the lever **457** there engages a spring **459**, which on the other hand is connected to a shaft **460** mounted in the two side walls **454** and **455** of the column totalizer. The spring **459** acts on the lever in the clockwise direction round the shaft **456**, whereby its normal position is determined by the tooth **461** of the lever **457** being in engagement with the 30 tooth toothed wheel **188** H*t* rotatably mounted on the shaft **462**.

With the toothed wheel **188** H*t* (Figures 1 and 2) of the lowest decimal place, a disc **465** provided with three tens-shift teeth **464** and a disc **466**, are rigidly connected. The three parts **188** H*t*, **465** and **466**, are produced from a single piece and consequently represent a single element. The nose **467** provided on the upwardly-directed free end of the lever **457** (Figure 1) is capable of acting on a flap **468** rockably mounted in the two side walls **454** and **455**.

To the right of the lever **457** (as seen in Figure 1) there is a lever **469** swingably mounted on the shaft **456**. The downwardly directed limb **470** of the lever **469**, is of fork-shape, and is capable of co-acting likewise with the release finger **202** above mentioned. The nose **471**, of the lever **469**, co-acts likewise with the flap **458**. On the lever **469**, a transfer wheel is rotatably mounted by means of a headed rivet **472** (Figure 1), the transfer wheel consisting of a ten-tooth toothed wheel **473**, a ten-toothed Maltese wheel **474** and a ten-tooth toothed wheel **475**, produced from a single piece, of which the toothed wheel **473**, is capable of co-acting with the three-toothed tens-shift disc **465**, and the Maltese wheel **474**, with the locking disc **466**. The disc **466** is provided with three notches **476**, for the free passage of the teeth of the Maltese wheel.

The toothed wheel **188** H*t*, is, further, in engagement with a toothed wheel **477** (Figures 1 and 2) which is loosely rotatable on a shaft **478**, rigidly mounted in the two side walls **454** and **455** of the column totalizer. The toothed wheel **477**, again, is in engagement with the toothed wheel **480**, loosely rotatable on the shaft **479**, which is rigidly mounted in the two side walls **454** and **455** of the column totalizer. A number roller **481** is rigidly connected with the toothed wheel **480**. The toothed wheel, **475**, associated with the lowest decimal place of the hundredths decimal place, is in engagement with the wheel **188** Z*t* of the tenths decimal place. The parts above described for the hundredths decimal place are

similar for the tenths, units, tens etc. decimal places. In the following therefore only the differences will be pointed out.

By means of a lever **482** (Figures 1 and 7) swingably mounted on the shaft **456**, of which lever the nose **483** (Figures 1 and 7) acts on a part **484**, arranged on the flap **468**, the flap **468** is held swung in the anti-clockwise direction (seen in Figure 1), whereby its rest position is determined by contact of the noses **467**, **471** of the levers **457**, **469** on the one hand, and, on the other hand, by contact of the nose **461** of the lever **457**, in the tooth spaces of the toothed wheels **188**. The lever **482**, moreover, is held swung in the clockwise direction (seen in Figure 1) by means of a spring (not illustrated) which engages with the hole **485** of the lever **482**.

Since in the pointing off-place of the column totalizer, which is in working position, no transfer into this column totalizer is permitted to take place, because when the pointing off-place of the column totalizer is opposite the master wheel **189** co-acts with the part S (Fig. 1) swingably mounted on the shaft **456** of the column totalizer, in such a manner that the projection **487** of part S comes to lie against the shaft **488**, fixed in the side walls **454**, **455** of the totalizer. Consequently the release finger **202** is prevented from swinging outwardly, and the calculating mechanism being locked.

The driving wheel **188H** of the highest place of the totalizer is further provided with three lateral elongated teeth **188H'** corresponding to the teeth **464** of the wheels **188H***t*, **188Z***t* etc. By this arrangement the calculating and total taking of values in the highest place is possible. A recess **455***g* (Fig. 2) in the side wall **455** of the totalizer admits the free movement of the elongated teeth **188H'** of the driving wheel **188H** of the highest place, so that the driving wheel **188H** may be rotated on the shaft **462**. The wheels **473**, **474**, **475** for the highest place of the totalizer are likewise arranged on a lever **469***a*.

By abutment of the aligning tooth **260** of the part **253** with one of the elongated teeth **188H'** of the driving wheel **188H** of the highest place the rotation of the wheel **188H**, is arrested as soon as the numeral wheel **481** of the highest place shows the digit "0", whereby total taking from the highest place of the totalizer is allowed.

Operation of the totalizer

During the automatic total taking, the carriage, on which the totalizers are arranged, is step by step from right to left.

Next of all, the paper carriage is, by dep of a tabulating key or the space key, brou the position in which the toothed circum of the wheel **188H** is opposite to the main wheel **189**. The aligning tooth **260** of t **253** is now within the reach of the three el teeth **188H'** of the driving wheel **188H**, wh arranged corresponding to the tens shiftin **464** of the wheels **188H***t*, **188Z***t* etc., wher release finger **202** releases the driving wh **474**, **475** of the highest place in the well manner as fully described in U. S. 1.270.471. Hereby the wheel **188H** may be back by the main driving wheel **189**, u of the elongated teeth **188H'** of the whe comes to lie against the aligning tooth the part **253**, whereby a zero is visible peephole of the totalizer casing. Hereu paper carriage (not illustrated) is autom moved one step to the left, so that now th ing tooth **260** of the part **253** is in enga with the toothed circumference of the wheel **188H** and locks the same, whereby lease finger **202** releases the wheel **473**, with the lever **470** associated with the wheel **188Z**, while the main driving whe in engagement with said driving wheel 1

Hereby the driving wheel **188Z** may turned until the tens shift tooth **464** of th **188Z** abuts against a transmitting tooth the wheel **473**, **474**, **475** of the highes which since it meshes with driving whe which is locked by the aligning tooth 26 part **253**, is also prevented from rotation the zero of the numeral wheel **481** associa the driving wheel **188Z** is visible in the p of the totalizer.

Owing to this arrangement, the highe mal place may be used for usual calculati poses as well as for total taking.

With the modification according to F and 6 open tooth spaces **188HL** are us regard to which the aligning tooth **260** yieldingly arranged in lateral direction, it may run on to the part **188HQ** and sn a tooth space **188HL** thus locking the whe in the position in which the appertain meral wheel shows a zero.

HUGO ERNST KÄM

PUBLISHED H. E. KÄMMEL Serial No.

MAY 25, 1943. REGISTER FOR TYPEWRITING CALCULATING MACHINES 287,671

BY A. P. C. Original Filed May 14, 1934 2 Sheets-Sheet 1

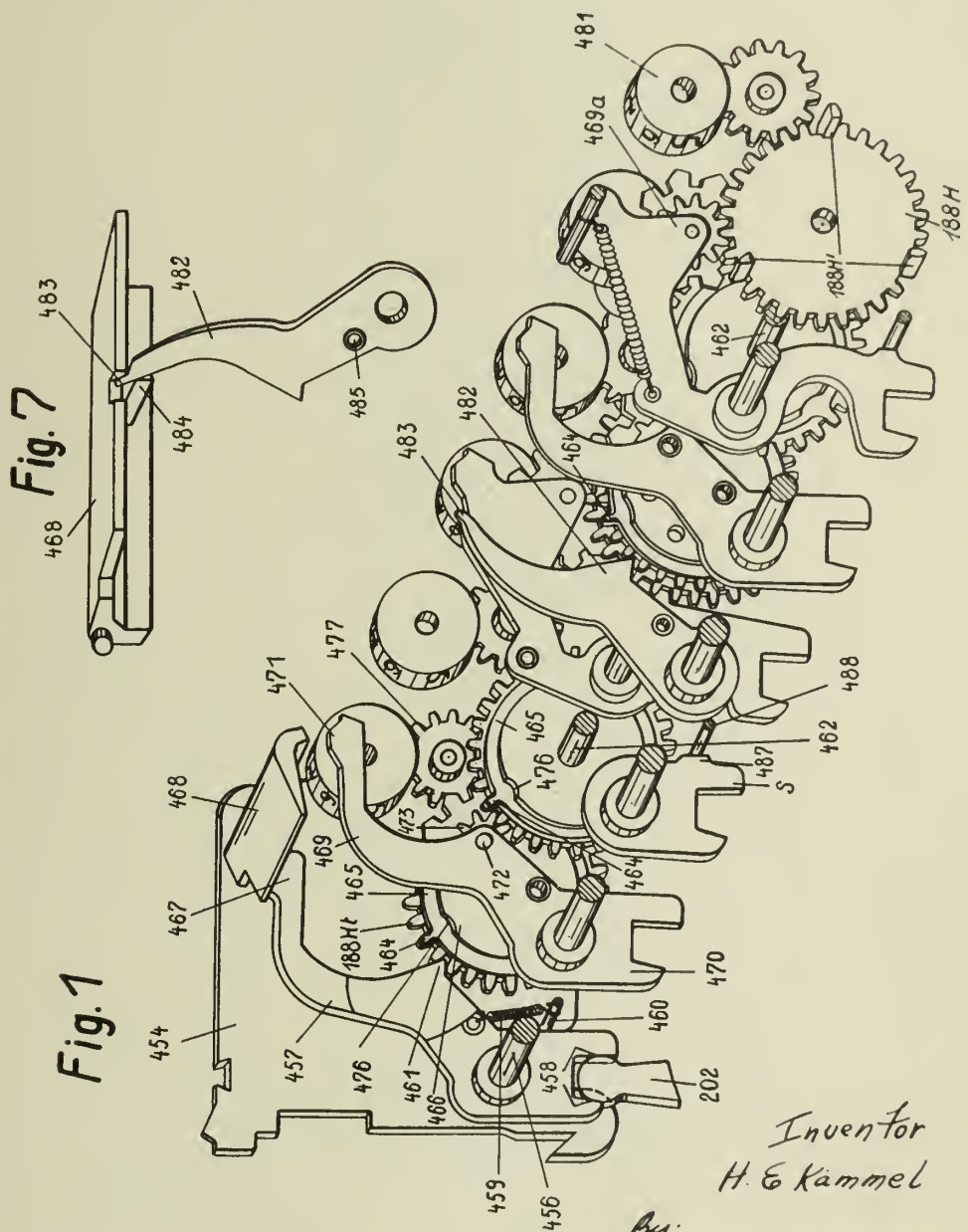

Inventor
H. E. Kämmel
By
Glascock Downing & Seebold
Attys.

PUBLISHED H. E. KÄMMEL Serial No.

MAY 25, 1943. REGISTER FOR TYPEWRITING CALCULATING MACHINES 287,671

BY A. P. C. Original Filed May 14, 1934 2 Sheets-Sheet 2

Fig. 2

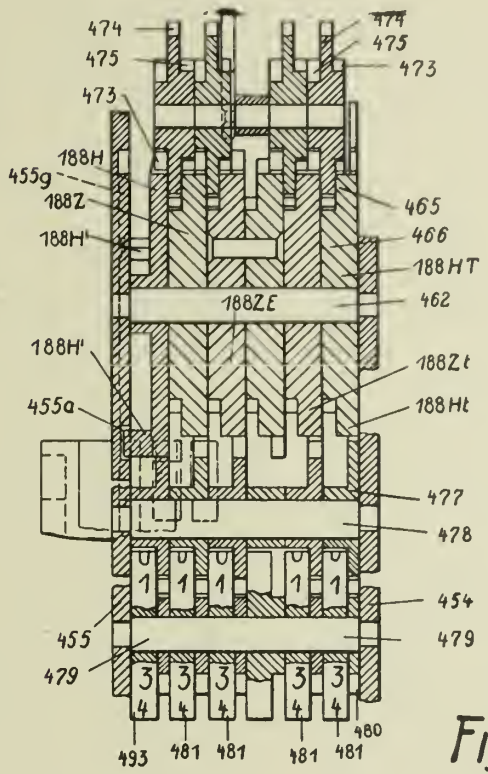

Fig. 3

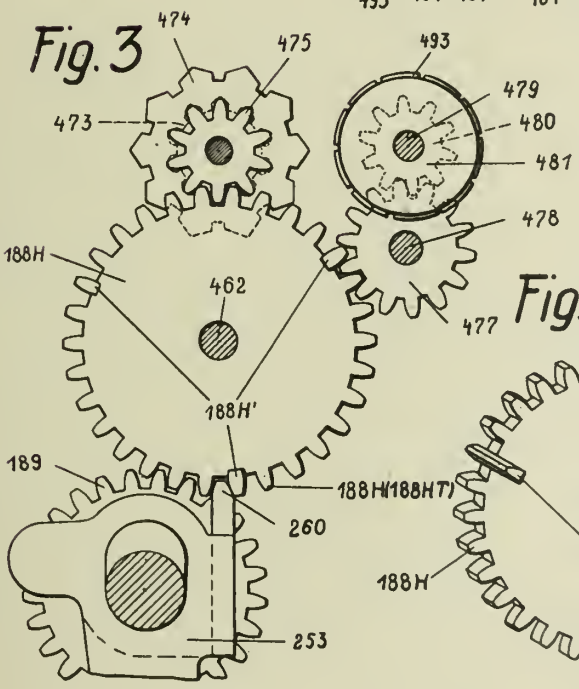

Fig. 4

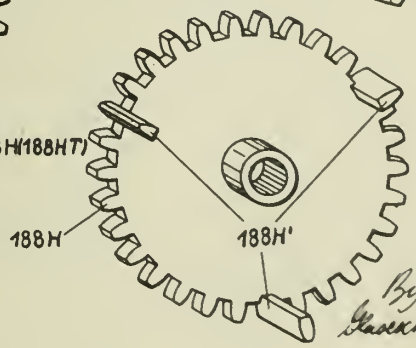

Fig. 5

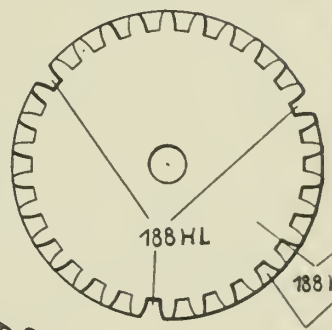

Fig. 6

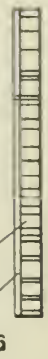

Inventor
H. E. Kammel
By
Glascock Downing & Seebold
Attys

Published May 25, 1943

Serial No. 287,672

ALIEN PROPERTY CUSTODIAN

TOTAL TAKING DEVICE FOR AUTOMATICALLY TAKING TOTALS FOR TYPEWRITING CALCULATING MACHINES

Hugo Ernst Kämmel, Zella-Mehlis, Germany; vested in the Alien Property Custodian

Application filed July 31, 1939

The invention relates to a total taking device for automatically taking totals for typewriting calculating machines of the type exemplified in my co-pending application Ser. No. 725,636, filed May 14, 1934, and of which the present application is a division.

Such devices have previously been known.

They had, however, the disadvantage that their whole construction was more or less complicated, since for the withdrawal of the values, members were provided other than those for registration of the values. The devices for this reason were expensive in construction and their operation was unreliable.

According to the invention, these disadvantages are now obviated by providing universal members which are inserted between the total taking mechanism and the total taking keys and which effect the typing and total taking operations in the registration and withdrawal of values.

In the drawings, one example of construction of the subject of the invention is illustrated as applied to a Mercedes Addelektra typwriting calculating machine.

Figure 1 shows a front elevation of the whole typewriting calculating machine.

Figure 2 shows a plan of the machine according to Figure 1.

Figure 3 shows a left-hand side elevation of the machine.

Figure 4 shows a front elevation towards the calculating members together with the calculating segment and a part of the change-over gear for the cross totalizers, in which view the number typing keys and the letter typing keys are represented in section.

Figure 5 shows a plan of the drive frame together with the calculating keys and the drive coupling.

Figure 6 shows a perspective illustration viewed from the front left-hand side of the machine, of the drive coupling with the setting member, common to all the calculating keys, for the coupling, in which view the individual parts for the sake of better insight are represented drawn out from one another.

Figure 7 shows in perspective, details of the setting member, the parts of which are likewise drawn out from one another.

Figure 8 shows a perspective illustration of the transmission and control mechanisms arranged between the typing and calculating keys, viewed from the front left-hand side of the machine, together with the change-over gear for the column totalizers and a part of the change-over gear for the cross totalizers, in which view the individual parts are illustrated drawn out from one another.

Figure 9 shows a perspective illustration of a locking mechanism controlled by the column totalizers, viewed from the front left-hand side of the machine.

Figure 10 shows a perspective illustration of the total-taking mechanism for the column totalizers viewed from the front left-hand side of the machine, together with a part of the change-over gear for the column totalizers and the printing mechanism for the sign for taking totals from the column totalizers, in which view the parts are illustrated partially drawn out from one another.

Figures 11 and 12 show detail parts in respect to the total-taking mechanism illustrated in Figure 10, in two different positions.

Figure 13 shows a perspective illustration of the total-taking mechanism for the cross totalizers, with the printing mechanism for the sign in addition thereto and a part of the change-over gear including both the driving wheels for the cross totalizers, the view being taken from the front left-hand side of the machine and various parts being illustrated drawn out from one another.

Figure 14 shows in perspective the change-over gear for the cross totalizers viewed from the front left-hand side of the machine.

Figure 15 shows in perspective the unlocking mechanisms for the column and cross totalizers, viewed from the front left hand side of the machine.

Figure 16 shows in perspective the control, known in itself, for the coupling arranged between both the driving wheels of the cross totalizers, viewed from the front left-hand side of the machine.

Figure 17 shows a partial side elevation of the machine viewed from the left-hand side of Figure 1, in which parts of the machine housing are broken off in order to disclose the mechanisms of the total-taking arrangement for the cross-totalizers, separate parts being illustrated in section.

Figure 18 shows a perspective arrangement of a totalizer viewed from the rear, in which view the detail parts are illustrated in a condition separated from one another.

Figure 19 shows a perspective illustration of a locking lever with locking flap, viewed from the left-hand edge of the rear side of the totalizer.

Figure 20 shows a section according to the line *a—a* of Figure 18.

Figure 21 shows a section according to the line *b—b* of Figure 18.

Figure 22 shows a cross-section through one of the usual totalizers as hitherto used, in which view for the sake of better apprehension, the individual wheels, with their shafts, are disposed in one plane.

Figure 23 shows a similar illustration to Figure 22, of a totalizer slightly modified for the present invention, wherein the modification in spite of its apparent insignificance is nevertheless of importance.

Figure 24 shows a detail.

Figure 25 shows a perspective illustration of the control mechanism for sub-total taking, viewed from the front left-hand side of the machine.

Figure 26 shows a partially illustrated sheet, filled in with an example of calculation which is to find application later in the explanation of the manner of operation.

Figure 27 shows in the form of a table the shift procedure of the kind of calculation for the cross totalizers according to the example of calculation illustrated in Figure 26.

The machine housing **1** (Figures 1 and 3) carries by means of rails **2** and **3** the paper carriage **4**, in which a platen **5** (Figure 3) is arranged. To the front side of the paper carriage, there is fixed a supporting rail **7**, for carrying the column totalizers T, which will be hereinafter described in detail.

To the right-hand side of the paper carriage **4**, the carriage release lever **8** (Figure 3) is swingably mounted and to an extension of this lever a carriage release bar **9**, is fixed. This bar is rigidly connected at its other side, with a lever **10**, which is swingably mounted on the left hand side of the paper carriage, on a screw **11**.

The carriage release lever **8**, release bar **9** and lever **10** form part of the mechanism for releasing the usual carriage escapement mechanism in the usual manner which mechanisms being well known in the art have not been illustrated in detail and need not be further described.

For the purpose of the mechanical line shift and for the return of the paper carriage there is, further, on the carriage **4**, a rack **12** (Figures 1 and 3) which is displaceably mounted by screws **12b** engaging with the slots **12a**. With the rack **12**, engages a toothed wheel **13**, which is pinned on a shaft **14**. This shaft is mounted in a stationary bearing **15**, and carries a rigidly mounted bevel wheel **16** on its end, remote from the toothed wheel **13**. With the bevel wheel **16**, engages a bevel wheel **17** (Figure 1) which is fixed on a shaft **18**. The shaft **18** is rotatably mounted in a bearing **19**, rigidly connected to the machine frame, and on its other end is provided with a spur wheel **20**, which, on its part, engages with a spur wheel **21** which is rotatably mounted on a shaft **23**, arranged in the bearing **22**. The spur wheel **21**, again, is in engagement with the spur wheel **25**, which is rotatably mounted on the shaft **24**, the spur wheel **25**, on its part meshing with a spur wheel **26**, formed as part of a coupling half **26a**. The wheel **26**, is loosely rotatable and axially displaceable on a part **27** (Figure 1) of a cam shaft C (Figure 3) which drives the type levers. On the part **27**, further, a second coupling half **27a** is fixed which is formed similarly to the spur wheel **28**, but is not axially displaceable. The shaft **27**, is rotated in the direction of the arrow "*a*" (Figure 3) by means of a screw **29** (F 1 and 3), and a worm wheel **30**, driven by tor M which is arranged on the right-han of the machine.

The line shift and the carriage return is ed by bringing the coupling half **26a**, in gagement with the coupling half **27a**, by of a lever **31**, which is operated by the righ margin stop M*r* Figure 1). Such engagem said halves and operation of said lever **31** ates the hereinbefore described wheel d to **26**, and the rack **12**, to effect line spa the platen **5** and the return of the carr the right in a manner and by associated fully described in U. S. Patent to Schlu 1,582,788 to which attention is directed opening of the coupling, **26a**, **27a**, is effec the left-hand margin stop M*l*, as the pap riage **4** runs into its extreme right-hand p to uncouple said halves **26a** and **27a**. Th writer mechanism proper comprises lette **32**, number keys **33** and calculating keys **34** 1, 2, 3 and 8) mounted upon key levers **36**, **82**, respectively, movable downwardly arou ot **37** against the action of springs **38**. T culating keys **34** act indirectly on the numl levers **35** in a manner and by means as de under the headings, "Operation of the ca ing mechanism" and "Operation of the aut printing mechanism." By means of a pi driving pawl **41**, is mounted on each key **35**, **36**, and this pawl is so acted upon tension spring **42**, that its lug, **43** rests a nose **44**, of a key lever **35**, **36**. The n of the driving pawl, **41**, engages over a n of the draw hook **49**, jointed to the intern lever **47**, by a pin **48**, and the draw-hook i upon continually round its pin **48** in th clockwise direction by means of a tension **50**, and presses upwards against a stop **51**, by its normal position is determined.

On the draw-hook **49**, the control too provided with two teeth **49a** and **49b**, is ro mounted on the pin **49d**. If one of the keys, **35** or **36** is depressed, the associate trol tooth **49c** moves into engagement w cam shaft C as described in the patent to S Nr. 1789661, dated Jan. 20, 1931. The tooth **49c** is first of all rotated slightly an takes the draw-hook **49** along with it to th so that the intermediate lever **47** is swung the shaft **52**, in the clockwise direction. A ingly, the type lever **54**, is swung in th clockwise direction round the shaft **5** strikes against the platen **5**.

The spur wheel **28** (Figures 1 and 3) w non-rotatably mounted on the shaft **27** (Fi engages with a spur wheel **56**, which is mounted on the shaft **57**. The spur wl again is in engagement with the spur wh rigidly mounted on the shaft **58** (Figures 6 and 17).

The above described mechanisms do not to the invention but have been briefly de for the better understanding of the part hereinafter described, belonging to the inv

The calculating mechanism drive sh (Figures 3, 5, 6), on the one hand, is ro mounted in the bearing eye **60**, arranged right hand side of the machine housing on the other hand, the part **58a**, of th **58**, is rotatably mounted in a bearing **61**, is fixed by means of the screws **62**, to a **63** connecting the two side walls, **64** and **6** other shaft **68**, (Figures 3, 5, 6, 8, 9, 10,

17) is rigidly mounted by means of set screws 67, screwed into bosses 66 (Figure 5) on the left and right hand side walls 64 and 65 of the machine housing 1, and on this shaft, members to be hereinafter described, are swingably mounted.

In the bearing eye 61 (Figures 5 and 6), a cam, 69 (Figures 3, 5, 6) is rotatably mounted by means of the sleeve 69*a*, rigidly fixed to the cam. The cam 69, is rigidly connected to the cams 71 and 72, by means of screws (not illustrated) which pass through holes 70, of the cams. The shaft, 58, however, remains without any action on the cams, since the cams 69, 71 and 72, as well as the sleeve, 69*a*, have greater bores "*y*" (Fig. 6) than the diameter of the shaft, 58. The cams 69, 71 and 72 are prevented from lateral displacement, on the one hand, by contact of the side 69*b*, of the cam 69, with the edge 61*a* of the bearing eye, 61 and, on the other hand, by contact of the cam, 72, with the toothed wheel, 73 non-rotatably mounted on the square shaft, 58. The toothed wheel, 73, participates in the rotation of the square shaft, 58, which continually rotates in the arrow direction *b* (Fig. 6). On the cam, 72, a pawl, 74 (Figures 5, 6) is displaceably arranged by means of pins, 77 and 78, which engage in elongated slots 75 of the cam 72, in elongated slots 76 of the cam 71, and in elongated slots, (not illustrated) in the cam 69. The pawl 74, is acted on continually in the direction of the arrow c (Figure 6) by a compression spring 79, which, on the one hand, abuts against the pin 78, fixed to the pawl 74, and, on the other hand, abuts against the face 72*a*, of the slot 75, in the cam 72. Moreover, a stud, 80 formed on the pawl 74, co-acts with a part, to be hereinafter described in detail, by means of which the tooth 74*a* of the pawl 74, is held out of engagement with the toothed wheel 73. In ring grooves (not illustrated) in the ends of the pins, 77 and 78 of the pawl 74, which project from the left-hand side of the cam 69, a locking member 81, is fixed, in the manner illustrated in Figure 6, so that the pawl 74, always remains in connection with the cams 69, 71 and 72, and the pawl 74 is prevented from falling out. It may be remarked at this point that for the whole ten calculating keys 34, only one coupling as just described, is necessary.

A downwardly directed wide projection 226*a* of a total key 226*a*′ is capable of co-acting with a corresponding bent nose 97 of a bar 98. On the right and left hand ends of the bar 98, pins 98*a* (Figures 6 and 7) are formed, one pin being arranged at each end. By means of these pins, the bar 98, is swingably mounted on the levers 100 and 101, rigidly mounted on both ends of the shaft 99. The shaft 99, at its right hand side, is rotatably mounted by means of a set screw 102 (Figure 6) in a bearing member 103, which is fixed to a bar 105, by means of screws 104. On the left-hand side of the machine, the shaft 99, is rotatably mounted by means of a cone bearing 106 (Figure 7) in a bearing member 107, which is fixed with screws 108, to the bar 105, already mentioned. The bar 105 is fixed to both side walls 64 and 65 of the machine housing 1, by means of screws 105*s* (Figure 5) which pass through holes 105*a* and 105*b* (Figures 6 and 7) of the bar 105.

By means of a spring 109, which, on the one hand, engages with a lug 98*b* of the bar 98, and, on the other hand, is connected to a pin 99*g* (Fig. 3) rigidly fixed to the shaft 99, the bar 98, is acted on in the anti-clockwise direction round its pins 98*a*, so that its upper surface presses upwards against a bent lug 103*a* on the bearing block 103, whereby the normal position of the bar 98, is determined.

A locking bar 110 (Figures 3, 6, 7) is swingably mounted at both its ends on the shaft 99, in the manner indicated in Figures 6 and 7. At the right-hand and left-hand ends of the locking bar 110, further, pins 110*a* are fixed, with each of which a spring 110*b* (in Figure 6 this has not been illustrated for the purpose of rendering other parts visible), engages, which spring, on the other hand, is connected to bent lugs 100*a* or 101*a* of the levers 100 and 101. By means of these springs 110*b* the locking bar is always acted upon round the shaft 99 in the clockwise direction, whereby its normal position is determined, on the one hand, by contact with the pin 100*b*, riveted to the lever 100, and, on the other hand, by contact with the pin 101*b* riveted to the lever 101. The right-angled limb 110*g*, is capable of co-acting with the nose 226*b* (Figure 6) formed on the total key lever 226, in a manner to be hereinafter described.

On the shaft 99, (Figures 3, 6, 7) further, a lever 111 is rigidly mounted to the free end of which a pin 112 is riveted (in Figure 6 for the sake of illustration the same is indicated in the withdrawn position). The pin 112 of the lever 111, co-acts with the fork-shaped end of an arm 113, of a three-armed lever 114, which is swingably mounted on the shaft 68. The arm 114*a* of the three-armed lever 114, co-acts with the stud 80, already mentioned, of the pawl 74, while the arm 114*b*, of the same, co-acts with the cam 72, in a manner hereinafter described. A spring 115 engages with a pin 114*f* (in Figure 6, the pin 114*f* is shown removed from the lever 114 for purposes of illustration) riveted to the nose 114*d* (Figure 6), the spring at its other end being connected to a pin 115*a* (Figure 5) on a stay 115*b*, which is fixed to the part 63 and to the cross stay 105. By means of this spring, the three-armed lever 114, is acted on in the clockwise direction round the shaft 68, in consequence of which the lever 111 connected to it, the shaft 99, and the levers 100 and 101 pinned to it, the locking flap 110 and finally the bar 98, are acted upon in the anti-clockwise direction, whereby on the one hand, the upper face of the lug 98*x*, under the action of the spring 109, and on the other hand, its edge 98*s* under the action of the spring 115, contacts with the edge 103*g* of the lug 103*a* of the bearing member 103, whereby the normal position of the parts 114, 111, 99, 100, 101, 110 and 98, is determined.

Further, on the shaft 63, a lever 116 (Figures 3, 6) is swingably mounted, at the free end of which a roller 117 is arranged, which is capable of co-acting with the cam 69. By means of the spring 119, which, on the one hand, engages with the pin, 118 of the lever 116, and on the other hand, is connected to the part 63, the roller 117, is always maintained in contact with the cam 69.

The lever 120, which similarly is swingably mounted on the shaft 68, is likewise capable of co-acting by means of its rearwardly directed arm 120*a* with the cam 69. By means of the spring 123 which, on the one hand, engages with the pin 121 and, on the other hand, is connected to a pin 122 (Figure 6) of the bridge 105, the lever 120, is acted on in the clockwise direction round the shaft 68, whereby the projection 120*b* of this lever contacts with a part 120*c*, fixed to

the locking bar **110**, and the normal position of the lever is thereby determined.

By means of the set screws **127**, screwed into the two side walls **125** (Figure 4) of the calculating casing **126** (Figures 1, 3, and 4) a shaft **128** is freely rotatable.

On the shaft **87**, (Figure 9) a lever **87*a*** is pinned which is capable of co-acting by means of its nose **87*b***, with the lug **87*c*** of a lever **87*d***. The lever **87*d***, is capable of being swung round a screw **87*e*** mounted on a supporting member **87*f***, which is screwed fast to the bar **105**, and which by means of its fork-shaped part **87*f***, embraces the shaft **68**, and thus supports the same. On the lever, **87*d*** an arm **87*d'*** is bent in the form of a U, to the upwardly projecting lug of which, a bar **87*i***, guided by means of a screw-slot connection **87*g***, **87*h***, is attached. This bar feels a pin **87*k***, by means of its setting piece **87*j***. The screw **87*h*** of the screw-slot connection is, moreover, screwed to a support **87*m*** fixed to the cross-bridge **63** of the machine housing. The said pin **87*k***, is riveted to a bar **87*n***, which is guided in the front wall **139**, of the calculating casing by means of a screw-slot connection **87*o***, **87*p***. At its other end, the bar **87*n***, is jointed to a lever **87*r***, rotatable on the screw **87*q*** (Figure 9). This, again, co-acts with a lever **87*s***, rotatably mounted on the shaft **166** (Figure 8) which lever **87*s***, is capable by means of its nose **87*s'*** of feeling the bars **87*t***, arranged on the column totalizers.

The lever, **87*s***, moreover, co-acts with a locking lever **87*u***, mounted on the shaft **142**, which locking lever is connected with the lever **87*s*** by a spring **87*v***. If no bar **87*t***, of a column totalizer lies over the nose **87*s'*** of the lever **87*s***, or if the nose **87*s'*** lies in the intermediate space **87*t'*** of two bars **87*t***, the nose **87*s''*** of the lever **87*s***, lies in the stop **87*u'*** of the lever **87*u*** under the action of the spring **87*v***, whereby the rest position of the lever **87*s*** is determined. If the lever **87*s*** is in the rest position, the lever **87*r*** is swung in the clockwise direction around the screw **87*q*** under the action of the spring **87*w***, which engages with the bar **87*n***. Hereby the lever **87*r*** lies against the nose **87*s'*** of the lever **87*s*** whereby the rest position of the parts **87*r*** and **87*s*** is determined.

In this case, also, the leved **87*d*** is swung by way of the bar **87*i***. in the anti-clockwise direction against the action of the spring **87*x*** which engages with the lever **87*d***, and which is weaker in comparison to the spring **87*w***, whereby the lug **87*c***, of the lever **87*d***, moves in front of the nose **87*b***, of the lever **87*a*** and prevents the lever **87*a*** swinging in the clockwise direction. Similarly, the nose **87*d''*** of the lever **87*d*** moves behind the edge **98'** of the hook **93''** of the bar **98**, whereby a swinging of the flap **98** in the anticlockwise direction, is prevented.

A roller lever **132**, is loosely rotatable on a shaft **87** (Figures 6 and 8) and on the free forwardly-directed end of this lever, a roller **133**, is mounted, which is capable of co-acting with the cam, **69**, hereinbefore described. To the roller lever **132**, is jointed a draw-bar **134** which, at its upwardly directed free end, is jointed by means of a screw **135** (Figures 3, 4 and 8) to the lever **137**, which is loosely rotatable on the locking shaft **142**. By means of a spring **141**, which, on the one hand, engages with the pin **138**, rigidly mounted on the draw-bar and, on the other hand, is connected to a pin **140**, rigidly mounted on the front wall **139** (Figures 3 and 6) of the calculating casing **126**, the draw-bar **134**, is acted upon al-

ways in the direction of the arrow *a* (Fig and 8), so that the roller **133**, is always tained in contact with the cam **69**.

The locking shaft **142**, is arranged so a loosely rotatable by means of set screws (lustrated) on the two side walls **125** of the lating casing **126**. To the lever **137**, a pin fixed, which projects through an elongate **144**, of a lever **136**, rigidly mounted on th ing shaft **142**. A spring **145**, engages with **143**, of the lever **137**, the other free end spring being connected to a pin **146**, fixed lever **136**, whereby both levers **136** and yieldingly connected to one another.

To the lever **136**, a connecting member jointed by means of a screw **147** and this ber is jointed to an angle lever **150** (Figur by means of a screw **149**. The lever **150**, a swingably mounted by means of a screw an angle member **152**, which is fixed by m screws **153** (Figure 3) to the front wall **1** the angle lever **150** (Figure 8) is fixed a which projects into a ring groove **156**, of a **157**, and this sleeve is arranged so as to be displaceable on a shaft **158**, mounted in ar able manner in the two side walls **125**, of t culating casing **126**. With the sleeve **157**, **159**, likewise mounted so as to be axially di able on the shaft **158**, is in fixed connectio **160** (Figure 4) are arranged on the toothe **159**, and these pins are always in enga with a claw **161** (Figures 4 and 8) rigidly ed on the shaft **158**. Further, on the shaft arranged a toothed wheel **162**, the pins which are likewise in engagement with th **161** (Figures 4, 8, 13).

The toothed wheel **162**, is rigidly conne a ring grooved sleeve **164** (Figure 4) which ranged so as to be axially displaceable shaft, **158**.

On the shaft **87** (Figure 4, 6 and 8) t rigidly mounted a lever **165**, on the free wardly projecting end (Figure 6) of which er **166**, is arranged, and this roller is cap co-acting with the cam **71**, hereinbefo scribed. The lever, **165**, is, moreover, fixed shaft **87**, in such a manner that its roller normally in contact with the cam **71**.

Besides, on the shaft **87** (Figures 4, 6, 8 ver **167**, is arranged, so as to be loosely ro thereon. To the lever **167**, a roller **168** tached, so as to be rotatable, and this r capable of co-acting with the cam **72**, he fore described, in a manner to be hereina scribed in detail. To the lever **167**, a slide jointed by means of a headed screw, **1** means of a spring **171**, which, on one h connected to a pin **172**, arranged on the s and, on the other hand, engages with a (Figure 4) arranged on the front side of t culating casing, the slide **170**, is alway upon downwards in the arrow direction *a*, by the roller **168** of the lever **167**, is alwa in contact with the cam **72**.

The slide **170** is provided with an el hole **173*x***, formed correspondingly to that ure 8, into which hole projects a roller **175** ed on the calculating sector **174**. The calc sector **174** is arranged so as to be capable justment and of being fixed in position shaft **128**, by means of a screw **176*a***. T wardly directed part of the calculating sec is provided with teeth **177**, with which th driving wheel **159**, hereinbefore described, i ble of being moved into engagement.

The toothed sector 174, (Figures 3, 4, 8) which is actuated on striking the total key 226*a'*, in a manner to be hereinafter described, transmits the swinging movement corresponding to the value to be cleared, by way of the toothed wheel 159, and shaft 158, to a locking wheel 178 (Figure 8) rigidly mounted on the shaft 158, which locking wheel is always in engagement with a guide and locking tooth 179. Further, on the shaft 158, a toothed wheel 180 is mounted so as to be capable of axial displacement. This is normally in engagement with a toothed wheel, 181, which is integrally formed with a hollow shaft 182, and a toothed wheel 183. The unit 181, 182 and 183 is rotatably mounted on a shaft 184, fixed in the left-hand wall 125 (Figure 4) of the calculating casing. The toothed wheel, 183, again, is in engagement with a toothed wheel 185, which is rigidly mounted on a shaft 186. The shaft 186, is rotatably mounted in the left-hand side wall 125 of the calculating casing and in a bearing member (not illustrated) arranged approximately at the centre.

Beside the toothed wheel 185, there is a further toothed wheel 187, mounted so as to be non-rotatable on the shaft 186. Further, on the shaft 186, a master wheel 189 (Figure 8) is rigidly mounted, which comes into engagement with the toothed wheels 188 (Figure 3) of the column totalizers T, in the working position.

On the wheel 180, a ring grooved sleeve 190 is rigidly mounted, into which projects a pin 191, of a lever 193, rigidly mounted on the shaft 192, which is rotatably mounted in the calculating casing. The driving of the toothed wheel 180 (Figures 8 and 1) on a rotational movement of the shaft 158, is effected by a coupling disc 180*a* pinned to the shaft 158, into which disc engage claws 180*b*, rigidly connected with the toothed wheel 180.

On the shaft 87 (Figures 3 and 8) there is rigidly mounted a lever 194, to the free upwardly directed end of which a draw-bar 196 is jointed by means of the screw 195. A nose 197, of the draw-bar 196, engages over a nose 198, of a lever 199, rigidly mounted on the shaft 142. By means of a spring 200, which engages with the draw-bar 196, and which on the other hand is connected in the calculating casing in any suitable manner, the lever 196 is normally swung about the screw 195, in the anti-clockwise direction, whereby the lever 196 is normally positioned so that its nose 197 always remains in engagement with the nose 198 of the lever 199. The lever 196 rests against a pin 201, arranged in any suitable manner, in the calculating casing.

On the shaft 142 (Figures 3, 8) there is fixed a release finger 202 which is capable of acting on a locking lever 461, arranged in the totalizer T1, to T8 in a manner to be hereinafter described. Further, on the shaft 142 there is a locking tooth 203, rigidly mounted, which is capable of co-acting with the main driving wheel 189, rigidly mounted on the shaft 186.

On the clamp 129*d* (Figures 4 and 8) a member 204 is mounted by means of screws 129*b*, and to the free downwardly projecting part of the member 204, which is somewhat bent at the rear, a member 206 is jointed by means of a screw 205. On the left-hand side of the machine a clamp 208 is arranged, so as to be capable of adjustment and to be clamped in position by means of a screw 207. To the projection 209 of the clamp 208 a part 211, correspondingly formed to that in Figure 8, is fixed by means of screws 210, and to the free downwardly projecting end of the part 211 there is attached a part 213 by means of a screw 212. A bar 216, correspondingly formed to that in Figure 8, is fixed to the part 213, by means of screws 214, and to the part 206, located at the right hand side of the machine by means of screws 215, so that a frame consisting of the parts 208, 211, 213, 216, 206, 204 and 129*d* is formed.

The part 206 (Figure 8), located on the right-hand side of the machine, moreover, is guided by means of a head screw 217, which projects through an elongated slot 218 of a lever 219, rigidly mounted on the shaft 87, and the part 213, arranged on the left-hand side of the machine of the frame, is guided by means of a headed screw 220, which projects through an elongated slot 221, of a lever 222, rigidly mounted on the shaft 87, so that the frame 213, 216, 206 is prevented from swinging downwardly round the screws 212 and 205. With the arm 223 of the lever 222, and with the arm 224 of the lever 219, engage springs 225, one spring with each arm, which springs are connected at their free ends in any suitable manner in the machine housing, and these springs act upon the levers 222 and 219, and consequently upon the frame 213, 216, 206 in the clockwise direction. The swinging movement in the clockwise direction, however, is normally prevented by the draw-bar 196, the nose 197 of which engages over the nose 18 of the lever 199. The bar 216 of the frame 213, 216, 206, in a manner to be described later, is capable of co-acting with the noses 35*g* formed on the downwardly and forwardly extending number key levers 35 (Figure 3). Moreover the noses 35*g* are arranged on horizontal parts 35*h* of different lengths of the number key levers 35, the lengths of these parts corresponding to their values "0" to "9," and the horizontal part 35*h* corresponding to the value "0" (Figure 3) is formed as the shortest and the horizontal part corresponding to the value "9" as the longest.

On the left-hand side of the machine is arranged the total key 226*a'* indicated by TV (Figure 2 and 10) for taking the total of the column totalizers T. The key 226*a'* is attached to the key lever 226 as described, which is swingably mounted on the shaft 68. The wide projection 226a above described, of the total key lever 226 is capable of acting on the bar 97, 98 in the manner to be later described. The nose 226*b* of the key lever 226 is capable of co-acting with the nose 110*g* of the part 110. The rearwardly and somewhat upwardly projecting arm 226*d* of the key lever 226, is capable of acting with its somewhat arched face 226c on the somewhat arched face 227 of an arm 228 of a two-armed lever 229. The two-armed lever 229 is swingably mounted by means of a head screw 230 on a supporting member 232, which is mounted by means of screws 231, in suitable manner on the machine housing. To the free rearwardly directed arm 233, of the two-armed lever 229, a draw-bar 235, formed correspondingly to that in Figure 10, is jointed by means of a screw 234, which draw-bar is provided with an elongated hole 236, in its free upwardly directed end. Through this hole a screw 237 projects, which is screwed into a lever 238, fixed on the shaft 192, whereby the draw-bar 235 is held loosely in connection with the lever 238. The

draw-bar **235**, is connected, in the manner illustrated in Figure 10, with a three-armed lever **239**, which is swingably mounted in a suitable manner at **239***x* on the rear wall of the calculating casing **126**. With the arm **239***a* of the three-armed lever **239**, a spring **240** engages, which at its other free end is connected to a pin mounted in the calculating casing, but not illustrated. In consequence of the action of the spring, **240**, the draw-bar **235** is acted on in the direction of the arrow *b*, whereby its normal position is determined by striking of the key lever **226** against a stop **226***s* arranged on the machine housing.

On the shaft **192**, Figure 10, mounted in the front wall **154** and in the back wall **241** (Figure 3) of the calculating casing **126**, the swingable lever **193** (Figure 10) already described, is rigidly mounted, and is rigidly connected by means of a sleeve **242**, with the lever **243**, which is likewise swingable with the shaft **192**. The lever **243**, again, is connected by means of a pin **244**, with the lever **245**, which is swingably mounted on the shaft **192**. The pin **244** is embraced by a fork-shaped end of a control lever **246** (Figure 10). With the pin **244**, a spring **248** engages, which is connected to the pin **247**, mounted on the control lever **246**, whereby the control lever **246** is acted on towards the left and the levers **245**, **243** towards the right, so that the same are always held in contact with the control lever **246**.

To the upwardly directed arm **239***b* (Figure 10) of the three-armed lever **239**, a part **250** is fixed by means of two screws **249**, the angle **251** of the part **250** being somewhat inclined. The part **250** is capable of co-acting with a downwardly directed part **252** of a locking and aligning tooth **253** (Figures 10, 11, and 12). The locking and aligning tooth **253** is, as is evident from Figure 10, of U-shape.

An elongated hole **254** is provided in each of the limbs **252** and **253***a*, and through these holes projects the shaft **186** already described. Into the elongated hole **255**, arranged in the part **252** of the locking and aligning tooth **253**, and correspondingly formed to that in Figure 10, there projects a pin **257**, rigidly mounted on the lever **256**. The lever **256** (Figures 8, 10 and 15) is rigidly mounted on the shaft **142**, hereinbefore described.

A spring **258** (Figures 10, 11 and 12) on the one hand, engages with a lug **259**, of the locking and aligning tooth **253** and, on the other hand, is connected to the lever **256**. The locking and aligning tooth **253** is positioned in its normal position with the edge **254***a* of its elongated hole **254**, resting against the shaft **186** and the edge **255***a* of the elongated hole **255**, against the pin **257** of the lever **256**. On the bridge connecting the two limbs **252** and **253***a* of the locking and aligning tooth **253**, a tooth-like projection **260**, is formed, which is capable of engaging in the tooth spaces of the toothed wheels **188**, arranged in the column totalizers. A control lever **298** for the control of addition or subtraction is jointed at its right hand end to a lever **299** (Figure 13). The lever **299** is rigidly mounted on a shaft **300**, which is mounted in bearings in the front wall **154**, and in the rear wall **241**, of the calculating casing **126**.

On the supporting rail **7** (Figures 1 to 3) of the paper carriage **4**, as already stated, the column totalizers T are removably mounted. On the column totalizers T, pre-setting plates **301** (Figures 1, 13) are mounted by means of which the control of the type of calculation of the associated column totalizer located in the working position is effected for addition or subtraction. Th
setting plate **301** of one of the column tot
(Fig. 1), which is directly in the working
tion, moreover, acts on a part **302** (Figure
an angle lever **303**, which is mounted, by
of a screw **304**, on the front wall **154**, of th
culating casing **126**. By means of a sprin
which engages with the lever **303**, and i
nected to a pin **306**, fixed in the front w
of the calculating casing **126**, the parts 3
298, are held in their normal positions illus
in Figure 13, the normal position being
mined by striking on a pin **308**, arranged
front wall **154** of the calculating casing
lever **303**, is of fork-shape at its lower e
embraces with the same a pin **309**, of a
lever **311**, swingably mounted, by mean
screw **310** on the front wall **154** of the calc
casing **126**. While the pin **309** is capable
acting with the V-shaped recess **312** of th
trol lever **298**, the pin **313**, fixed to the
lever **311**, co-acts with the upwardly direc
shaped recess **298***a*, but the pin **313**, on i
is in no way connected with the angle lev

On the front wall **154**, of the calculatin
ing **126**, is arranged a knob **315** (Figures
2) which is capable of being set on
"Subtr." or "Disc." corresponding, respe
with "Addition," "Subtraction" and "I
nected" and this knob is rigidly connec
the lever **316** at **315***a* Figure 10). On th
trol member, **316**, pins **317**, **318** are ar
which co-act with the control lever **246** in

Further, on the shaft **300** (Figure 13)
is mounted a lever **320**, which is rigidly co
to the lever **299**, by means of a sleeve **321**
13). A pin **322**, arranged on the lever 3
gages in a ring groove **164***a* (Figure 4
sleeve **164**, rigidly mounted on the toothe
162. The toothed wheel **162**, if the cr
talizers Q1 and Q2 operate in the additive
is in engagement with the toothed wh
(Figure 14) rigidly mounted on the sha
which is rotatably mounted in the calc
casing **126**. Further, on the shaft **323**, t
arranged a toothed wheel **325**, which is i
relation to the toothed wheel **324**, by m
a sleeve **326**. The toothed wheel **325**, a
in engagement with an intermediate wh
rotatably mounted on the pin **327**. The
is rigidly mounted on the right-hand si
125, of the calculating casing **126**. As
evident from Figure 14, the toothed wh
can be moved sometimes into engageme
the toothed wheel **324** and at other tim
the intermediate wheel **328**.

On the right-hand side of the machi
key **329**, for taking totals of the cross to
Q1 and Q2, is arranged. The key **329**
tached to the key lever **330** (Figures 13
swingably mounted on the shaft **68**, t
lever being corespondingly formed to
Figure 13. The nose **330***a*, of the key le
is capable, in a manner to be later de
of co-acting with the nose **110***g* of the
110, and the projection **330***b* of the ke
330 is capable of co-acting with the bar 9
rearwardly directed part of the key le
is somewhat arched at **331**, on its u
directed edge. This arched face **331**, is
of co-acting with an arched face **332**, of
337, vertically displaceable by means
screw-slot connections **333**, **334** and 3
arranged in suitable manner on the rigl
side of the machine and the front wall

housing. With the projection 337*a*, engages a spring 338, which, on the other hand, is connected at its free end to a pin 339 (Figures 13, 17). To the upwardly-directed end, formed correspondingly to that in Figure 13, of the rod 337 there is riveted a pin 340, which projects into a curved slot 341 of a slide 342. The slide 342 is displaceably mounted by means of screws 343, which pass through the elongated holes 344 of the slide 342. The left hand end of the slide 342 is of fork-shape construction. With this fork-shaped part, there engages the pin 346 of a lever 345, rigidly mounted on the shaft 300. Another lever 347, which is rigidly mounted on the shaft 300, has likewise a pin (not illustrated) which is capable of projecting into the ring groove 164*a* (Figure 4) already referred to, of the sleeve 164.

On the slide 342 (Figure 13) there is a bent-off lug 348 (Figures 13 and 17) which is capable of being positioned so that the face 349 of its nose 350, lies in front of the face 351 of a locking or aligning tooth 352. On the shaft 353 which, on the one hand, is rotatably mounted in the right-hand side wall 125 of the calculating casing and, on the other hand, in a bearing member (not illustrated) suitable mounted in the machine housing, a lever 354 (Figures 15 and 16) is rigidly mounted. The locking and aligning tooth 352, as is evident from Figures 13 and 16, is fork-shaped at its forwardly directed end and its fork-shaped part embraces a sleeve 363*a* (Figure 16) loosely rotatable on the shaft 323, whereby the locking and aligning tooth 352 is guided at one of its ends. At its other end, it is guided by means of a screw, 355, fixed to the lever 354, and the screw projects through an elongated hole 352*a* (Figure 17) in the locking or aligning tooth 352. By means of a spring 356, which, on the one hand, engages with a pin 357, fixed to the lever 354 and, on the other hand, is connected to a pin 358 (Figure 17) arranged on the locking or aligning tooth 352, the parts 352 and 354 are so acted upon that the stem of the screw 35 is moved against the right-hand edge of the elongated hole 352*a* in the locking and aligning tooth 352, whereby their normal position in relation to each other is determined. On the locking and aligning tooth 352 is arranged a tooth-like part 359 (Figures 13 and 17) which, in a manner to be hereinafter described in detail, is capable of co-acting with the toothed wheels 360, arranged on the left-hand cross totalizer Q1. A nose 361 (Figures 15 and 17) provided on the lever 354, is normally in engagement with the master wheel 362 (Figure 13) loosely rotatable on the shaft 323. With the master wheel, 362 and the sleeve 362*a* (Figure 16) a coupling half 363 (Figure 16) is rigidly connected.

A lug 364, correspondingly formed to that in Figure 13, on the bar, 342, is capable of co-acting, by means of a face, 365 (Figure 13), with a face 366 of a locking and aligning tooth 367. This is fork-shaped at its forwardly directed end and embraces with this end a sleeve 367*g* (Figure 16) arranged so as to be loosely rotatable on the shaft 323. By means of a screw 369*x* which projects into the elongated hole 368 (Figure 16) of the locking and aligning tooth 367, and which is screwed into the lever 369, rigidly mounted on the shaft 353, the locking and aligning tooth 367, is guided. This is of tooth-like construction at its forked part 370, and this part is capable of co-acting with the toothed wheels (not illustrated), arranged in the cross totalizer Q2. The tooth 371 of the locking lever 369 (Figure 16), is in engagement with the teeth of the master wheels 372, which are loosely rotatable on the shaft, 323. By means of a spring 373*x* which, on the one hand, engages with a pin 373, arranged on the lever 369 and, on the other hand, is connected to a pin 367*a* (Figures 13 and 16) fixed to the locking and aligning tooth 67, the parts 367 and 369 are so acted upon that the stem of the screw 369*x*, which is screwed into the lever 369, lies against the edge 374 of the elongated hole 368, of the locking and aligning tooth 367, whereby its rest position is determined.

With the master wheel 372, the sleeve 367*g* (Figure 16) is in fixed relation. To the sleeve 367*g*, a coupling half 375 (Figure 16) is fixed. As will be evident from the above, the sleeve 363*a*, the master wheel 362, the sleeve 362*a* and the coupling half 363, are connected with one another and are loosely rotatable on the shaft 323, but are not axially displaceable thereon. The same holds for the parts 375, 367*g* and 372.

Further, on the shaft 323, a coupling sleeve, 378, consisting of the two coupling halves 376 and 377, is axially displaceable and rotates along with the shaft 323. With this arrangement, the coupling half 376 is capable of moving into engagement sometimes with the coupling part 363 and at other times the coupling half 377 is capable of moving into engagement with the coupling part 375, and finally in the middle position of the coupling sleeve 378, both of the coupling halves 376 and 377 simultaneously engage with the coupling parts 363 and 375, so that alternatively one or other of the totalizers Q1 or Q2, and finally both these totalizers can be operated at the same time.

In the ring groove 378*g* of the coupling sleeve 378, there engages a pin 378*h* (Figure 16), which is fixed to the lever 378*k*, correspondingly formed to that in Figure 16. The lever 378*k* is swingably mounted by means of a screw 378*m*, on a lug of the rear wall 241 (Fig. 3) of the calculating casing. By means of a screw 378*n*, a connecting rod 378*p* is jointed to lever 378*k* which connecting rod 378*p* on its other end is in articulated connection with an angle lever 378*s*, swingably mounted in a suitable manner on the front wall of the calculating casing. The lever 378*s* is capable of co-acting by means of its right-angled upwardly-bent nose 378*t* with a bar 378*y* attached to the column totalizer T, by means of screws 378*x*. (In Figure 16, only one is visible.)

On the shaft 353 (Figure 15) a lever 378*a* is rigidly mounted, which by means of its part 379, formed correspondingly to that in Figure 13, acts in a mouth 380 of a two-armed lever 381, swingably mounted on the shaft 142. With the nose 378*b* of the lever 378*a*, a spring 378*c*, engages, which acts on the shaft 353 in the clockwise direction and thus holds the parts 354 and 369 in engagement with the master wheels 362 and 372. The lever, 381, is arranged on the outside of the right-hand side wall 125 of the calculating casing. This lever is constructed with its upper end of fork-shape. With this fork-shaped part 382 engages a nose 383 of a lever 384, rigidly mounted on the shaft 142 and having its upper end bent-off at right angles. The lever 384, moreover, is arranged at the left of the right-hand side wall 125 of the calculating casing.

On the right-hand side of the machine and on the inner side of the front wall 139 (Figures 3 and 25), a slide 391, is adjustably displaceable to the right and left by means of a setting knob 392, and a sliding screw 393. The slide 391, is

capable of acting by means of its edge 394 on a slide 396, displaceably mounted by means of screws 395, in the calculating casing 126. To the right-angled upwardly-bent part 397 of the slide 396, an angle lever 399, is jointed by means of a screw 398. This angle lever, 399, is swingably mounted, by means of a screw 400, on the rear wall 241 (Figure 3) of the calculating casing 126. By means of a screw 401, a bar 402, formed as shown in Figure 25, is jointed to the free limb of the angle lever 399. The bar 402 has its downwardly-directed end of fork-shape, and its fork-shaped part 403, embraces a pin 404, which is fixed to a lever 406. The lever 406, is rigidly mounted on a shaft 407, which is rotatably mounted in bearing members 408, fixed to the machine housing in any suitable manner. (In Figure 25 the bearing member 408 located on the left-hand side of the machine only is illustrated.) The forwardly-directed end of the lever 406 carries the key 409 provided with the symbol "SK".

The slide 391 (Figure 25) is bent at right angles and is provided with an inclined face 410. By means of this face, the slide 391 is capable of acting on a slide 411. The slide 411 is displaceably mounted on the slide 170, on the one hand, by means of a screw 412, which passes through an elongated hole 413 in the slide 411 and which is screwed into the slide 170 above described and, on the other hand, by means of a pin 414, fixed to the slide 411, which projects through an elongated hole 415 (Figure 8) of the slide 170. By means of a spring 416, which, on the one hand engages with a pin 414 and, on the other hand, is connected to a pin 417, fixed to the slide 170, the slide 411 is held in the position illustrated in Figure 25. On the locking shaft 142 is rigidly mounted a locking lever 418, which is capable of co-acting with the slide 411. Normally, the locking lever 418 takes up the inoperative position illustrated in Figure 25, in relation to the slide 411.

On the shaft 353, already described, the release fingers 353*b* (Figures 15 and 25) for the cross totalizer Q1, and the release fingers 353*a*, for the cross totalizer Q2, are rigidly mounted. Further, on the shaft 353, is rigidly mounted the part 419, to which, again, is riveted by means of two rivets 420, a bar 421, having its downwardly directed end of fork-shape. The bar 421, embraces a pin 423, mounted on the angle lever 422. The angle lever 422 is swingably mounted on a bearing member 423*a*, fixed in any suitable manner to the machine housing, and a pin 424 arranged on the angle lever 422 is positioned on the upper edge 425 of the known back space key lever 426, and is capable of co-acting with this in a manner to be hereinafter described. This carries the key 427 at its forwardly-directed end, the key being provided with the indication "BS". The lever 426 is swingably mounted on the screw 428, on the machine housing. By means of a spring 429 which, on the one hand, engages with the key lever 426 and, on the other hand, is connected to a pin (not illustrated) fixed to the machine housing, the key lever 426 is acted upon round the screw 428 in the anti-clockwise direction, whereby its rest position is determined by striking against a screw 426*x*.

To the key lever 426 is jointed a draw-bar 431, by means of a screw 430, the draw-bar being correspondingly formed to that in Figure 25. The free upwardly-directed end of the draw-bar 431 is jointed by means of a screw 432, to a yoke 433. This is swingably mounted by means of the screw 434 on the bearing m 435 (in Figure 25 only one is visible). The ing member 435 is rigidly mounted on th chine housing by means of screws, 436. A ber 439 is jointed to the downwardly-di limb 438 of the yoke 433, by means of a 437. On the member 439, a part 440, cons ed as shown in Figure 25, is adjustably mo by means of screws 441. To this end, the 441, pass through elongated holes 441*x* part 440 and are screwed into the membe On the part 440, there is swingably moun means of a screw 442, a member 443, wh capable of co-acting by means of its too with the ratchet wheel 445, and by its own is normally positioned with the edge 446 elongated 447, lying on a pin 448, which is to the part 440. The part 440 is guided screw 450, which is screwed into the ma housing, and passes through the elongate 449, of the part 440. The ratchet wheel rigidly mounted on a shaft 451, mount bearings in the machine housing. On the 451, further, a toothed wheel 452, is fixed, is in engagement with the rack 453 ar on the paper carriage.

The individual parts of a totalizer will described in detail. In connection with may be pointed out that in Figure 22, is trated a totalizer of the usual type used up present, while in Figure 23, is illustrated talizer modified in accordance with the tion.

On a shaft 456 (Figure 18) rigidly mo in the two side walls 454 and 455 (Figu 22 and 23), a lever 457 is swingably moun the lowest decimal place, and is formed w lower end of fork-shape. The release lev (Figure 8) hereinbefore described, is capa engaging in the fork-shaped part 458, a acting on the lever 457. With the leve there engages a spring 459, which on the hand is connected to a shaft 460 mounted two side walls 454 and 455 of the column izer T. The spring 459 acts on the lever clockwise direction round the shaft 456, by its normal position is determined by the 461 of the lever 457 being in engagemen the 30 tooth toothed wheel 188 H*t* rot mounted on the shaft 462.

With the toothed wheel 188 H*t* (Figu 22 and 23 and 24) of the lowest decimal a disc 465 provided with three tens-shift 464 and a disc 466, are rigidly connected three parts 188 H*t*, 465 and 466, are pro from a single piece and consequently rep a single element. The nose 467 provided upwardly-directed free end of the lever 457 ure 18) is capable of acting on a flap 468 ably mounted in the two side walls 454 a

To the right of the lever 457 (as seen in 18) there is a lever 469 swingably mount the shaft 456. The downwardly directe 470 of the lever 469, is of fork-shape, and pable of co-acting likewise with the release 202 above mentioned. The nose 471, of th 469, co-acts likewise with the flap 468. lever 469, a transfer wheel is rotatably mo by means of a headed rivet 472 (Figures and 23), the transfer wheel consisting of tooth toothed wheel 473, a ten-toothed M wheel 474 and a ten-tooth toothed whee produced from a single piece, of whic toothed wheel 473, is capable of co-acting the three-toothed tens-shift disc 465, an

Maltese wheel 474, with the locking disc 466. The disc 466 is provided with three notches 476, for the free passage of the teeth of the Maltese wheel.

The toothed wheel 188 H*t* is, further, in engagement with a toothed wheel 477 (Figures 17, 18, 22 and 23) which is loosely rotatable on a shaft 478, rigidly mounted in the two side walls 454 and 455 of the column totalizer T. The toothed wheel 477, again, is in engagement with the toothed wheel 480, loosely rotatable on the shaft 479, which is rigidly mounted in the two side walls 454 and 455, of the column totalizer. A number roller 481 is rigidly connected with the toothed wheel 480. The toothed wheel, 475, associated with the lowest decimal place or the hundredths decimal place, is in engagement with the wheel 188 Z*t* of the tenths decimal place. The parts above described for the hundredths decimal place are similar for the tenths, units, tens, etc. decimal places. In the following therefore only the differences will be pointed out.

By means of a lever 482 (Figures 18 and 19) swingably mounted on the shaft 456, of which lever the nose 483 (Figure 19) acts on a part 484, arranged on the flap 468, the flap 468 is held swung in the anti-clockwise direction (seen in Figure 18), whereby its rest position is determined by contact of the noses 467 of the levers 457, 469 on the one hand, and, on the other hand, by contact of the nose 461 of the lever 457 in the tooth spaces of the toothed wheels 188. The lever 482, moreover, is held swung in the clockwise direction (seen in Figure 18) by means of a spring (not illustrated) which engages with the hole 485, of the lever 482. Since in the pointing off-place of the column totalizer, which is in working position, no transfer into this column totalizer is permitted to take place, the locking shaft 142 (Figure 8) and the parts located on it are prevented from being unlocked by the release finger 202, which when the pointing off-place of the column totalizer is opposite the master wheel 189 co-acts with the part S (Fig. 18) swingably mounted on the shaft 456 of the column totalizer T, in such a manner that the projection 487 of part S comes to lie against the shaft 486, fixed in the side walls 454, 455 of the totalizer T. Consequently from swinging outwardly the release finger 202 is prevented.

The differences which exist between the usual prior form of totalizer according to Figure 22, will now be referred to.

As is evident from Figure 22, the two wheels 188 Z*t*, 465, 466 and 188K, 465, 466, are connected by rivets 489 to one another, so as to form a single element, in order to bridge over the comma place, or for transferring a ten from the tenth's decimal place 188 Z*t* into the units decimal place 188E. It must first be set forth that if the wheels 475 of the transfer wheels 473, 474 and 475 are in engagement with their associated driving wheels 188 a rotation of the last named wheels is not possible as long as the wheel 474 is engaged by a concentric part of the locking disc 466 as shown in Fig. 24. Therefore, if e. g. the Maltese wheel 474, located between the hundredth's decimal place 188 H*t* and the tenth's place 188 Z*t* contacts with its locking disc 466, the wheel 188 Z*t* will not be permitted to rotate, since the form of the teeth of the Maltese wheel 474, which contact with the locking disc 466 (Figure 24) of the wheel 188 H*t*, do not permit of rotation of the same. Accordingly, the wheel 475 which is rigidly connected to the Maltese wheel 474, and which is in engagement with the driving wheel 188 Z*t*, will not permit of a direct rotation of the wheel 188 Z*t* by the master wheel 189 (Figure 8). If, on the other hand, after the locking lever 461, 457 (Figures 18 and 21) has been raised by the locking finger 202, (Figure 8) the driving wheel, 188 H*t* is acted on by the master wheel 189, so the wheel 188 H*t*, as is readily perceived from Figure 24, may rotate without hindrance, as its locking disc 466 rotates past the teeth of the stationary Maltese wheel 474. If, now, during the rotational movement of the wheel 188 H*t* a tens shift tooth 464 (Figure 24) strikes against the toothed wheel 473 rigidly connected with the Maltese wheel 474, so the wheel 473, together with the Maltese wheel 474, can rotate through one unit, since at this instant the tooth concerned of the Maltese wheel 474, passes through the space 476 of the locking disc 466, of the wheel 188 H*t*. Accordingly, as the parts 473, 474, 475 rotate through one unit, so the wheel 188 Z*t* will also rotate through one unit whereby the number roller of the tenth's decimal place is shifted by way of the wheels 477 and 480, through one unit.

If now, the wheel 168 Z*t* of the tenth's decimal place is to be rotated by the master wheel 189, the lever 469 (Figures 18 and 22) must be raised by the release finger 202. The transfer or locking wheel 473, 474, 475 located between the hundredth's decimal place and the tens place, moves out of engagement with its associated locking disc 466, and also with the wheel 188 Z*t*, so that the latter can be rotated by the main driving wheel 189 (Figure 8). Moreover, the wheel, 188K naturally, is also rotated by the rivets 489 without, however, having any action on the comma roller 490. If, however, a tens transfer results in the tenths decimal place, the units wheel 188E and the associated number roller are rotated, by way of the transfer wheel lying between the wheel 188K and the wheel 189E, one unit further.

In the automatic "clearing" of a totalizer the procedure according to the invention is as follows:

The locking or aligning tooth 253, 260 (Figure 11) is locked in a tooth space, e. g. of the wheel 188Z (Figure 22), so that a rotation of the wheel 188Z is impossible. The master wheel 189 (Figure 8) is in this case located opposite to the wheel 189E and the release finger 202 has raised the locking wheel disposed between the wheel 188E and the wheel 189K. If the master wheel 189 now rotates in the subtractive sense, the wheel 189E, if its associated number roller, e. g. indicates a "7" will rotate backwards by way of "6," "5" etc. It can do this until one of its tens shift teeth strikes against the wheel 473 of the transfer wheel which has not been raised, and which is located between the wheel 188E and the wheel 188Z. Since this transfer wheel, however, is in engagement by way of its wheel 475 with the wheel 188Z, and the wheel 188Z is locked by the aligning tooth 253, 260, the wheel 188E cannot rotate further, at which moment its associated number roller shows a "0." As soon as the clearing of the units place is effected, that is to say, as soon as the number roller 461 of the units place indicator "0" and this mark is printed on the sheet, a carriage movement is effected automatically, the totalizer with the decimal place moving into working position. In this position of the totalizer, the clearing key is now depressed whereupon the totalizer with its tens place moves

into working position. In this case, therefore, the aligning tooth **253, 260**, is in engagement with the wheel **188K** (Figure 22) while the master wheel **189** is in engagement with the wheel **188Z*t***. Since, however, the wheels **188K** and **188Z*t*** are riveted together and, on the one hand, the wheel **188K** is locked by the aligning tooth **253, 260**, and on the other hand the wheel **188Z*t*** is to be rotated, so it is obvious that this is an impossibility.

In order to render this possible, the column totalizers as well as the cross totalizer, are modified according to Figure 23. Instead, therefore, as is shown in Figure 22, of riveting the wheel **188Z*t*** to the wheel **188K**, according to the invention, the wheel **188K**, is riveted to the wheel **188E**, as shown in Figure 23. Further, the transfer wheel, which lies between the wheels **188K** and **188E**, as shown in Figure 22, is arranged according to Figure 23, between the wheels **188K** and **188Zt**, whereby the lever **469** holding the same must lie in the plane of the units decimal place and the transfer wheel is to be held through a distance sleeve **491** on its pin **472**, by the lever **469**.

If, now, with the arrangement according to Fig. 23 the wheel **188Z** is held locked by the aligning tooth **253, 260** (Figure 14) the release finger **202** brings, by way of the parts **469, 472** and **491**, the transfer wheel located between the wheels **188K** and **188Z*t***, out of an operative position, so that the wheel **188E**, with which the master wheel **189** is now in engagement, can be rotated by the master wheel **189**, although the wheel **188E** is riveted to the wheel **188K**.

If now the tenth's decimal place is to be "cleared" so the aligning tooth **253, 260** (Figure 11) is in engagement with the wheel **188K**, whereby the release finger **202** brings the transfer wheel located between the wheel **188Z*t*** and the wheel **188H*t*** out of an operative position while the main driving wheel **189** (Figure 8) is in engagement with the wheel **188Zt**. Consequently the number roller **481** is (Fig. 23) rotated to zero through the intermediary of the parts **477, 480** which position is determined by the fact that the wheel **180Z*t*** is held by the lock effected by the aligning tooth **253, 260**.

By this necessary modification for the automatic "clearing" the construction of the individual parts in themselves does not require to be changed in any way. Further the tens transfer described with reference to Figure 23 remains also exactly the same as in the usual prior totalizers according to Figure 22.

Since, further, as will be readily perceived from the foregoing, the decimal place which lies adjacent and next higher to the decimal place to be "cleared" must always be locked, a value located in the highest place of a totalizer cannot be cleared, in other words, precautions must be taken that in the highest place no value at all can be registered.

This is attained in the following manner. As is obvious from Figure 18, on the locking lever **469*a***, which carries the transfer wheel disposed between the wheel **188H** (Figure 23) and the wheel **188Z**, a nose **492** (Figure 18) is provided which lies against the shaft **480**. In this manner the locking lever, **469*a***, exactly as is the case with the locking member S for the comma place, is not allowed to be swung by the release finger **202** (Figure 8), so that a registration of a value, therefore, on the wheel **188H**, is not possible. In order to render visible from the outside (through the inspection aperture of the totalizer) that this

decimal place is not a calculating place, a
roller **493** (Figure 23) is inserted which
a black spot in the position in which the re
ing number rollers show a "0," while the re
ing periphery of the blank roller is red.
has for its purpose, that if from the number
of the tens decimal place **188Z** a tens tran
the additive or subtractive sense should oc
to the roller **493** (which is possible after wh
been said above with reference to tens tra
the attention of the operator is called to th
that he has overstepped the capacity of the
izer.

The method of operation of the subject
invention shall now be explained by the
an example of a calculation.

Thereby it is received that the bookke
at the columns **1** to **9** at the formular acc
to Figures 26 and 27 are operated in the m
described in the Patent No. 2,236,642 (
application Ser. No. 725,636). Further, it
ceived that the amount "184.30", which is
in the cross totalizer **Q1** and the amount
which is visible in the cross totalizer **Q2** ar
withdrawn, from the same and to trans
the column totalizers **T7** and **T8**.

In order to withdraw these amounts fro
cross totalizers **Q1** and **Q2**, and register
automatically in the column totalizers T
T8, it is necessary first to depress the tab
key **93** of the hundreds decimal place (Fig
in order to bring the hundred decimal pl
the column totalizer **T7** into the working
tion, whereby the cross totalizers **Q1** and
also moved by means of the coupling de
and *s2* (Figure 1), so that their hundred
mal places also are brought into the w
position.

As soon as the column totalizer **T7** arr
the working position, the pre-setting pla
(Figure 13) which has been set on subtr
of the column totalizer **T7** acts on the no
of the angle lever **303**, and swings the same
the screw **304** in the clockwise direction, a
the action of the spring **307**.

In this movement, the fork-shaped p
the lever **303**, acts on the pin **309** riveted
part **311**, whereby the same is swung in the
wise direction. Since the pin **309** is in e
ment with the recess **312** of the part 2
control rod **298** is displaced in the direct
the arrow *r*, indicated in Figure 13. In
quence of this, the lever **299**, the shaft 3
lever **320** and the lever **347** are swung
anti-clockwise direction. Since the pin
the lever **320** and the pin (not illustrated)
lever **347** engage in the ring groove of the
164 rigidly mounted on the toothed whe
the toothed wheel **162** is displaced to the
the shaft **158** and in this manner is dise
from the toothed wheel **324** and is e
with the intermediate wheel **328** which,
is in engagement with the toothed whe
which is not rotatable on the shaft 3
this manner the direction of rotation of th
ing wheel **362** has been reversed. In reg
this it may be remarked that the ba
(Figure 16) is so arranged on the colu
talizer that the bar **378*y*** on the entra
the column totalizer into the working po
is not able to rock the lever **378*t*, 378*s*** acc
to which the sleeve **378** remains in its po
illustrated in Figure 16, in which the tee
of the sleeve **378** are out of engagement w
teeth **375** of the driving wheel **367*g*, 372**

cross totalizer Q2, while the teeth 376 of the sleeve 378, are in engagement with the teeth 363 of the driving wheel 362 for the cross totalizer Q1. Consequently, on the operation of the machine the number rollers of the cross totalizer Q1, are rotated in the negative sense, while the number rollers of the cross totalizer Q2, are not acted upon. The column totalizer T1 remains set for additive operation. Further when the column totalizer T1 arrives in the working position, however, the bar 87*t* (Figure 19) fixed to the same, has come into operation on the nose 87*s'* of the lever 87*s* whereby the nose 87*s''* of the lever 87*s* has released the lever 87*u*, and further the remaining parts in connection with the lever 87*s* have also taken up the position according to Figure 9, so that the lever 87*a* of the shaft 87 and the hook 98'' of the bar 98, are released by the lever 87*d*, and can move freely.

Now, the key 329 for total-taking (TC) of the cross totalizer is depressed. With this operation the face 330*b* of the lever 330 acts on the nose 97 of the flap 98 and swings this in the clockwise direction against the action of the spring 109 (Figure 6). In this movement the lug 98*x* (Figure 6) of the flap 98, slides from the edge 103*g* of the bearing member 103, which is formed as a stop whereby the levers 100, 101, 111, rigidly mounted on the shaft 99 and the lever 114 mounted on the shaft 68 follow the pull of the spring 115, which engages with the three armed lever 114.

By the resulting swinging movement of the lever 114 in the clockwise direction the pawl 74 is engaged with the wheel 73, whereby the cams 72, 71, 69 participate in the rotation of the shaft 58 in the arrow direction *b*. The depressed key 329 (T. Q.) for taking totals of the cross totalizers Q1 and Q2 is held automatically for such time in the depressed position in the manner hereinafter described, until the cross totalizer Q1 is cleared, whereby the pawl 74 remains in engagement with the wheel 73 also for this period.

After, therefore, the shaft 58 and with it the cams 72, 71, 69 have commenced to rotate in the arrow direction *b*, the cam 72 acts first on the arm 114*b* of the lever 114 and swings the same against the action of its spring 115 and in the opposite direction of the arrow *m*, whereby the parts 111, 99, 100, 101 and 98 are swung in the clockwise direction, while the locking bar 110 at this point is still held swung-out in its anti-clockwise position by the engagement of the recess 120*d* of the lever 120 with the part 120*c*. In the swinging of the bar 98 in the clockwise direction, however, its nose 97 slides along on the projection 330*b* of the lever 330 of the key 329 (T. Q.), whereby the lug 98*x* of the bar 98 cannot engage with the stop 103*a* of the bearing member 103. Consequently, the parts 111, 100, 101, 98 (Figure 6) are not held at the end of their swinging movement in the clockwise direction but follow, on the further rotation of the cam 72, the action of the tensioned springs 115 and 110*b* so that the lever 114, therefore, is swung again in the arrow direction *m* and the parts 111, 100, 101, 98 are swung in the anti-clockwise direction, whereby the tension of the springs 115 and 110*b* is diminished.

When shortly before the end of the first revolution of the cams 72, 71, 69 i. e., shortly before the termination of the calculating operation in the hundreds denomination, the lever 120 by the co-operation of its arm 120*a* with the projection 69*c* of the cam 69 is swung round the shaft 68 against the action of the spring 123, the parts 120*d* and 120*c* are disengaged. Since, however, at this point the parts 111, 99, 100, 101 and 98 under the action of the spring 115 attached to the lever 114 are already swung again so far in the anti-clockwise direction that the pins 100*b* and 101*b* contact with the locking bar 110 and the latter is held up to this point in the locking position by the lever 120, therefore this bar is held by the pins 100*b* and 101*b* until the nose 120*b* of the lever 120 snaps behind the part 120*c*. Since, after the preceding movement, the parts 114, 111, 100, 99, 101 and 98 have been brought back again into the working position by means of the spring 115, so the nose 114*x* of the arm 114*a* of the lever 114 has again moved out of the working position in relation to the nose 80 of the pawl 74, whereby the cam series 72, 71, 69 is not uncoupled after the resulting revolution of the same, but commences a further revolution and consequently a new calculating operation also, after a carriage step, as hereinafter described, takes place so that the cross totalizer Q1 is then located with its tens denomination in the calculating position.

This operation is repeated for each denomination of the cross totalizer Q1 so that, therefore, the key 329 (T. Q) in accordance with what has been said above, is held automatically depressed until the totalizer Q1 is cleared.

After having described the locking of the key 329 (T. Q) in its depressed position, the further operations which are carried out on the depression of this key will be set forth.

The face 331, of the key lever 330, moreover, now acts on the depression of the key 329, on the face 332 of the slide 337, so that this slide moves upwards in the opposite direction of the arrow *a* (Figure 13) and against the action of its spring 338. With this, its pin 340, acts on the incline 341*a* of the slot 341 of the slide 342, whereby the slide 342 is displaced to the left (seen in Figure 13).

Now, should it have been forgotten by inadvertence to change over the cross totalizer Q1 for subtraction, because the pre-setting plate 301 of the column totalizer concerned, in this case T1, has not been set, this is not a disadvantage since, when the slide 342 moves to the left it acts on the pin 346 fixed to the lever 345, and rotates the lever 345, the shaft 300, the levers 347 and 320 in the anti-clockwise direction, so that the driving wheel 362, by means of the change-over gear 162, 328, 325, the shaft 323, the sleeve 378 (Figure 16) and coupling halves 376, 363, is changed over automatically for subtractive operation.

In the movement of the slide 342 (Figure 13) to the left, the nose 350 of the part 348 of the slide 342 moves in front of the face 351 of the aligning tooth 352 of the cross totalizer Q1, and the nose of the part 364 of the slide 342 moves in front of the face 366 of the aligning tooth 367 of the cross totalizer Q2, so that the teeth 359 and 370 of the aligning teeth are held in engagement with the four toothed wheels 360 (Fig. 17) of the cross totalizers Q1 and Q2, lying to the left of the driving wheel 362 or 372, so that the toothed wheels thus engaged are locked. The wheels, 360 of the cross totalizers Q1 and Q2 correspond, moreover, to the wheels 188 of the column totalizer.

In the rotation of the three cams 69 (Figure

6) 71, and 72, the roller 133 on lever 132, moves under the action of the spring 141 engaging with the rod 134, from the elevated part of the cam 69, on the lower part of the same, whereby the draw-bar 134 moves in the direction of the arrow *a*. Hereby, the toothed wheel 159 is brought into engagement with the teeth 177 of the calculating sector 174, by way of the above-described part 137 (Figure 8) 143, 136, 148, 150, 155 and 156. Further, on the displacement of the draw-bar 134 in the direction of the arrow *a*, the shaft 142, and the parts 199, 179, 203, 87*u* (Figure 9) 256 (Figure 10) 202, 418 (Figures 15 and 25) and 382 rigidly connected to it are swung by way of the parts 137, 143, 136 in the clockwise direction (seen in Figure 8) whereby by means of the release finger 202, the locking lever 469, (Figures 8 and 18) lying opposite to it, is raised and accordingly the calculating place located in the working position of the column totalizer T7 is unlocked.

In the swinging movement of the shaft 142 in the clockwise direction (Figure 15) the lever 384 fixed to it, is likewise swung in the same direction. As a result of this, the lever 384 acts, by means of its nose 383, on the lever 382, whereby the latter is swung in the clockwise direction. The lever 378*a*, which is in articulated connection with the lever 382, is hereby swung in the anti-clockwise direction against the action of its spring 378*c* in which swinging movement the shaft 353 and the levers 354 and 369, as well as the release fingers 353*b* and 353*a* participate, whereby the master wheels 362 and 372 are unlocked, and the toothed wheels located in the cross totalizers Q1 and Q2 are released. Since the coupling half 375 (Figure 16) is not in engagement with the coupling half 377 and therefore the driving wheel 372 is not acted upon, the release of the master wheel 372 by the pawl 369 is unimportant.

In the further rotation of the three cams 69 (Figure 6) 71, 72, the roller 168, rotatably mounted on the lever 167, moves from the elevated part of the cam 72, on to the lower part of the same. As a result of this, the draw-bar 170 (Figure 8) is displaced in the direction of the arrow *a* under the action of its spring 171. The incline 173*a*, of the slot 173*x*, of the rod 170, hereby acts on the roller 175 of the calculating sector 174, whereby this is swung in the anti-clockwise direction. Since the teeth 177 of the calculating sector 174, are in engagement with the toothed wheel 159, the driving wheel 362 of the cross totalizer Q1 is rotated in the subtractive direction, by way of the parts 158, 162 (Figure 14) 328, 325, 323 (Figure 16) 378, 376 and 363, and until the number roller of the hundreds place of the cross totalizer Q1, which shows a "1," has moved from "1" to "0" in which case, as already mentioned, a further rotation of this number roller is not possible since the wheel 360 of the next higher decimal place (thousands place) is held fast by the aligning tooth 352 which is locked by the nose 350 (Figure 13) of the slide 342. The calculating segment 174 (Figure 8) will be able, therefore, only to rotate through one unit. Accordingly, the master wheel, 189 is also rotated, by way of the parts 158, 180, 187, 186 likewise only through one unit, whereby in the hundreds decimal place of the column totalizer T7, a "1" is registered.

By the swinging-out movement of the calculating segment 174 through one unit, the lower arm 204 of this segment moves the number key striking yoke 206, 216, 213, forwards through one unit, whereby the number typing key le corresponding to the value "1" is selected key is depressed by the cam 71 (Figure 6) of the roller 166, lever 165, shaft 87, an 222, 219 as described in Patent No. 2, (patent application Ser. No. 725,656). A sult of the operation of the type b paper carriage moves one step to the lef fore, however, the carriage shift takes pla slide 134 (Figure 8) has moved upward and has effected the various locking ope again.

As soon as the paper carriage has m that the tens decimal of the column t T7 and of the cross totalizer Q1 have ar the working position, the operations—si key 329 (Figure 13) is held depressed— peated, whereby the number roller of th totalizer Q1, showing an "8" is moved while in the tens decimal place of the c talizer T7 and "8" appears, and after the "8" has been typed, the paper carriage moves one step to the left.

Consequently, the units decimal place column totalizer T7, and of the cross t Q1, are in the working position in wh operations are again repeated. After the ing" of the units decimal place has bee pleted the paper carriage is moved one the left by means of the space key, wher tenths decimal place of the column total and of the cross totalizer Q1, has arrived working position.

Now, the same operations are repeated tenths decimal place of the column total and of the cross totalizer Q1—as the ke still held depressed—whereby the tenths place of the cross totalizer Q1 moves to ze in the tenths decimal place of the colum izer T7 a "3" is visible.

When in the manner already describ column totalizer T7 and the cross tota are now moved so that their hundredths places are in the working position and th is typed on the paper, a further carria follows.

Consequently, the column totalizer T7 tioned so that the nose 87*s'* (Figure 8) lever 87*s*, lies in the space 87*t'* formed bars 87*t* of the two column totalizers T7 The lever 87*r*, in consequence of the pul spring 87*w*, on the rod 87*n*, could thereb in the clockwise direction and the rod 87 move downwards. The pin 87*k* of the hereby presses on the member 87*j*, wher rod 87*i* is moved downwards. The leve thereby swung in the anti-clockwise di whereby the lug 87*c* of the lever 87*d*, front of the nose 87*b* of the lever 87*a* a cordingly, a swinging movement of the le and of the shaft 87 in the clockwise dire not possible. In consequence of this, th 219 and 222 fixed on the shaft 87 (Fi cannot swing down. A downward move the number key striking bar 216, cannot fore take place. In this case, therefore, 199 would be superfluous. It must, how the other hand, be present in order to p lock for the comma place, in which case t controlled by the totalizer bar 87*t* (Fi take up the position according to Figu which, locking of the lever 87*a* cannot o

Through the swinging movement of t 87*d* round the screw 87*e* in the clockwis tion, the nose 87*d''* of the lever 87*d* (Fi

comes into the working position in relation of the hook 98'' of the bar 98.

When in the rotation of the cam series 72, 71 69 the lever 114 is swung by the cam 72 round the shaft 68 in the opposite direction to that of the arrow *m*, whereby the parts 111, 100, 99 and 101 are swung in the clockwise direction, the nose 87*d*'' of the lever 87*d* is laid, at the end of this movement against the edge 98' of the hook 98'' of the bar 98, and holds this bar together with the parts 101, 100, 99, 111 fast in this position. The nose 114*x* of the lever 114 hereby stands in the working position in relation to the nose 80 of the pawl 74. When, shortly before the end of the revolution of the cam series 72, 71, 69 the cam 69 acts on the lever 120 and swings this against the action of the spring 123, so the part 120*c* of the locking bar 110 is released. The locking bar 110 is now swung back in the clockwise direction on the shaft 99 by the springs 110*b* which have been tensioned by the swinging of the parts 111, 100, 99 and 101 in the clockwise direction. The nose 330*a* (Figure 13) of the lever 330 is hereby released from the limb 110*g* of the locking bar 110, so that the lever 330 of the key 329 (T. Q.) can return into its rest position under the action of the spring 338 (Figure 13). Accordingly, the bar 98 also returns into its initial position under the action of the spring 109, whereby the lug 98*x* of the bar 98 can be laid against the stop 103*a* of the bearing member 103, since the projection 330*b* of the lever 330 of the key 329 (T. Q.), which in the meantime has been raised, no longer prevents this. At the end of the revolution of the cam series 72, 71, 69 the nose 80 of the coupling pawl 74 is held by the nose 114*x* of the lever 114, whereby the pawl 74 (Figure 6) is disengaged from the wheel 73 and the rotation of the cam series is thus interrupted.

According to the foregoing description, therefore, a totalizer on the machine is automatically cleared at one operation in which the key 329 (T. Q.) is automatically held depressed during the clearing operation, and at the termination of the total-taking operation is automatically released again. As soon as the key, 329 (Figure 13) is released, the bar 98 (Figure 6) under the action of its spring 109, swings in the anti-clockwise direction round its own pivot axis, whereby the nose 98*x* rests again in front of the projection 103*g*.

Now, the amount "4,30" registered in the cross totalizer Q2, is written out of the same and transferred into the column totalizer T8. To this end, it is again necessary first to depress the corresponding tabulator key in order that the units decimal place of the column totalizer T8 and the units decimal place of the cross totalizer Q2 move into the working position. Then, the TC key 329 (Figure 13) is again depressed and held depressed until the zero of the hundredths decimal place has been typed on the paper. In the depression of the TC key and the writing out of the amount "4,30" from the totalizer Q2 and the registration of the same amount in the column totalizer T8, the same procedure takes place, as in the writing out of the amount "184,30" from the cross totalizer Q1, for which reason this will not be described in detail. If the zero of the hundredths place has been typed on the paper, then a carriage step results whereupon the coupling 69, 71, 72 automatically comes to rest.

Now, let it be assumed that at the end of the week or at the end of the month, the amounts registered in the column totalizers T1 to T8 are to be written out. To this end, the carriage return key is first depressed, whereby the paper carriage moves into its extreme right-hand position. Then, by means of the tabulator key, the carirage is moved to the left, until the hundreds place of the column totalizer T1 is located in the working position. It may still be remarked that the cross totalizers Q1 and Q2 are held by a locking lever 500 in their left-hand position and are thereby prevented from participating in the movement of the column totalizers concerned, by way of the coupling device *s*1 and *s*2 (Figure 1).

Now the TV-key 226*a*' (Figure 10) is depressed, whereby, by way of the parts hereinbefore described, the pawl 74 (Figure 6) moves into engagement with the toothed wheel 73, and the three cams, 69, 81, 72, participate in the revolutions of the shaft. In this case, also the pawl 74, remains in engagement with the toothed wheel 73, as long as the key lever 226 is held depressed, since in consequence of the face 226*a* (Figure 10) of the key lever 226, the part 114*x* (Figure 6) of the lever 114, cannot enter into the path of movement of the nose 80 of the pawl 74, and the nose 74*a* of this pawl cannot be brought out of engagement with the toothed wheel 73.

On the depression of the key lever 226 (Figure 10) the face 226*c*, acts on the face 227 of the lever 229, and swings the same in the anti-clockwise direction, whereby the rod 235 is moved downwards in the direction of the arrow *a* against the action of the spring 240, which engages with the arm 239*a* of the lever 239. Since the lever 239 is in connection with the rod 235, the three-armed lever 239 is swung round its axis 239*x* in the anti-clockwise direction. In this movement, the locking member 250, fixed to the arm 239*b*, moves so that it lies under the part 252 of the aligning tooth 253, so that this is held in engagement with the teeth of the driving wheels 188 of the column totalizer T1 to T8 lying opposite to it for the time being.

In consequence of the downward movement of the rod 235 the lever 238 connected with it and rigidly mounted on the shaft 192, as well as the shaft 192 are swung in the anti-clockwise direction. Since the lever 193 is likewise rigidly mounted on the shaft 192, this is also swung in the same direction. By the swinging movement of the lever 193, the toothed wheel 180 (Figures 10 and 8) is moved out of engagement with the toothed wheel 181, and into engagement with the toothed wheel 187, whereby the rotational movement, in consequence of cutting out the intermediate drive, 181, 183, is transmitted directly on to the main driving shaft 186, and accordingly, the column totalizers T1 to T8 are acted on in the subtractive sense.

On the rotation of the three cams 69 (Figure 6) 71, 72, first the toothed wheel 159 is moved into engagement with the teeth 177 of the calculating sector 174, by way of the parts 69, 132, 133, 134, 137 (Figure 8) 143, 136, 148, 150 and 156. Further, the shaft 142, and the parts 199, 179, 203, 87 (Figure 9) 256 (Figure 10), 202, 418 (Figures 15 and 25) and 382, rigidly mounted thereon, are rotated in the clockwise direction by way of the parts 134, 137, 143, 136.

Moreover, in the swinging movement of the shaft 142, in the clockwise direction (Figure 15) the lever 384 is swung in the same direction, whereby the levers 354 and 369 as well as the release fingers 353*b* and 353*a*, are swung in the

anti-clockwise direction by way of the parts **381**, **378***a*. This is, however, unimportant, since the cross totalizers Q1 and Q2, as previously mentioned, are not located in the working position.

On the further rotation of the three cams **69**, **71** and **72**, the calculating sector **174** is swung in the anti-clockwise direction by means of the cam **72** and by way of the parts **168**, **167**, **170** (Figure 8) **173**, **175** and since the toothed wheel **159** is in engagement with the teeth **177**, of the calculating sector **174**, the master wheel **189**, of the column totalizer T1 is rotated from "2" to "0", by way of the parts **158**, **180**, **187** and **186**. Further rotation of the wheel **188** of the hundreds place is not possible for the reasons hereinbefore described. By the swinging out of the calculating segment **174**, the number key striking yoke **206**, **216**, **213**, is simultaneously moved forwards through two units, whereby the number key lever corresponding to the value "2" is moved downwards by the cam **71** (Fig. 6) by way of the roller **166** and lever **165** and the "2" is typed on the paper. Hereupon, follows a carriage step to the left.

On writing out the remaining figures from the column totalizer T1 and the values out of the remaining column totalizers T2 to T8, the same operations take place. The typing of the comma is here effected in the same manner as was described on writing out the values from the cross totalizers Q1 and Q2. If one of the column totalizers T1 to T8 is to be cleared, so the coupling **69**, **71**, **72** comes automatically to rest in the manner described on taking the total from the cross totalizer Q1. The corresponding tabulator key is then depressed whereby the next totalizer, T2, is brought into the working position. Thereupon, the TV-key is again depressed, whereby the same operations, as already described, are repeated. This procedure is carried out until all the column totalizers T1 to T8 register zero.

The writing out of a sub-total is effected in the following manner.

First, the slide **391** (Figure 25) is moved by means of the knob, **392**, in the arrow direction *x*, whereby the edge **394** acts on the slide **396**, and displaces the same to the left. Consequently, the angle lever **399**, jointed to the slide **396**, is swung round the screw **400** in the anti-clockwise direction. The angle lever **399**, acts upon the bar **402**, downwards in the direction of the arrow *a*. The fork-shaped part **403** of the bar **402**, now acts on the pin **404**, of the lever **406**, which carries the shift key **409**, whereby by way of known parts (not illustrated) the shift of the platen results and the typing of the sub-total on the paper is executed with inclined type.

On the displacement of the slide **391** (Figure 25) to the left, the incline **410** of the slide **391**, acts on the slide **411** and displaces the same so far in the arrow direction *y* against the action of its spring **416**, until the nose **411***a*, of the slide **411**, lies over the nose **418***a*, of the lever **418**.

If, for example, the sub-total is to be taken from one of the cross totalizers Q1 and Q2, so the TC-key **329**, is depressed, whereby the coupling is again operated in the manner already described, and the cams **69** (Figure 6) **72** and **71**, displaced rotationally, and the aligning teeth **352**, (Figure 13) and **367**, are brought into the locking position. The shaft **142**, is hereby swung in the clockwise direction again, by way of the parts **133**, **132**, **134** (Figure 8), **137**, **143** and **136**, whereby the unlocking of the calculating mechanism and of the totalizers results. Moreover, the nose **418***a* (Figure 25) of the arm **418**, releases the nose **411***a*, of the slide **411**. On the swinging ment of the shaft **142** in the clockwise dir however, the shaft **353**, has been swung anti-clockwise direction by way of the par **383**, **381** and **378***a*, whereby the angle lever swung in the clockwise direction by way lever **421**, fixed on the shaft **353**, and th slot connection **423***a*, **423**. Herewith, the back space key lever **426**, is likewise sw the clockwise direction, but only partially, pin **424** of the angle lever **422**. According draw-bar **431**, joined to the back space key is displaced in the arrow direction *a*, wher way of the swing yoke **433**, the parts **439** a in turn jointed to it, are displaced in the direction *x*. Moreover, the tooth **444**, join the part **440**, by means of the screw **442** pawl **443**, projects into the tooth space toothed wheel **445** lying opposite to it, but out, however, rotating the same in any way extent of the depression of the back spa lever **426** is therefore so arranged by the lever **422**, that the tooth **444** of the pawl **44** locks the tooth wheel **445**, but is not cap rotating same. Accordingly, the carriage **453**, and the carriage rigidly connected to held fast by way of the parts **451** and **45** as will be seen from the following, for suc until the slide **170** after completing its ward movement, has again taken up its position.

On the above mentioned downward mov of the slide **170**, the edge **411***b* of the slid located on it, slides along on the edge **4** the lever **418**, and similarly when the sli again moves upwards. As will now be clea what has been described above, the cam **69** ure 6) is so formed that after the slide **170** ures 8 and 25) has completed its downward ment, it swings the shaft **142** again in the clockwise direction by way of the parts (6) **133**, **132**, **134** (Figure 8) **137**, **145** an whereby the locking of the calculating mech and of the totalizers is effected. On sub taking, however, in which the value is to r in the totalizer, it is necessary that the sam it has been withdrawn through the dow movement of the slide **170**, for the purp being typed on the paper, is registered ag the totalizer. The unlocking of the calcu mechanism and of the totalizers in cont tinction to the method of working describe erto, must be maintained until the slide **1** again taken up its upper position.

On the downward movement of the slid therefore, this will swing the calculating **174**, by way of its slot **173***x* and the roll (Figure 8) of the calculating sector, where value will be withdrawn from the corresp cross totalizer Q1 or Q2, by way of the t wheel **159**, which is in engagement with th culating sector **174**, and by way of the par **162** (Figures 13 and 14), **328**, **325**, **323** and **372**, connected with the toothed whee Hereby, the number key lever striking yok **216**, **213**, has naturally been moved forwar the number key concerned, whereby the n corresponding to the number key is type by way of the parts **54***a* (Figure 3) to **5** loose shift tooth (not illustrated) is diser from the shift wheel **54***f*, in which, howev the present—since the return pawl **444** (25) holds the paper carriage fast—no ca step can take place. Since, now, as prev mentioned, on the upward movement of th

170, the edge 411*b* of the slide 411, mounted on it, contacts with the edge 418*b* of the nose 418*a*, of the lever 418, a swinging movement of the shaft 142 in the anti-clockwise direction is not possible. Accordingly, the wheel 159, is also held in engagement with the calculating sector 174, by way of the parts 136 (Figure 8), 148, 150, 155 and 156, while the back space key lever 426 is held depressed by way of the parts 142 (Figure 25), 384, 383, 302, 381, 378*a*, 353, 421, 422 and 424. The calculating mechanism and the totalizers, therefore, still remain unlocked during the upward movement of the slide 170. Consequently, this will swing the toothed sector 174, in the opposite direction of the arrow *p*, by way of its slot 173*x* and the roller 175 (Figure 8) and since the same is in engagement with the toothed wheel 159, the value just withdrawn will appear again in the totalizer. Since, now, on the one hand, during the upward movement of the slide 170, the shaft 142, is held swung in the clockwise direction by the slide 411 mounted on the slide 170, and on the other hand, the cam 69 (Figure 6) endeavours to swing the shaft 142 in the anti-clockwise direction, by way of the parts 133, 132, 134, (Figure 8), 137, 143, 145 and 136, in the upward movement of the bar 134, a yielding connection must be provided. This is provided by the spring 145, arranged between the parts 136 and 137. As soon as the slide 170 (Figure 25) has arrived again in its upper position, the shaft 142, is capable, under the action of the tensioned spring 145, of swinging in the anti-clockwise direction, whereby the calculating mechanism and the totalizers are locked again and the back spaced key lever 426 (Figure 25) is released. In consequence of the release of the wheel 445 by the back space pawl 444, 443, the paper carriage can only then execute the carriage step previously released by the typing operation. The totalizer has then reached the next lower decimal place from which the sub-total is to be taken.

The operations just described are now repeated until the value has been withdrawn from the hundredths place, whereby when the totalizer has reached the comma position, the space-key must be depressed and the value is registered again, whereby the coupling 69, 71, 72 comes to rest automatically.

Moreover, it may be remarked, that the back space key on depression of the space key is not depressed, since the shaft 142 (Figure 13) in consequence of the comma locking member S (Figure 18), cannot swing out and accordingly also no swinging out of the angle lever 422 occurs, by way of the parts 384, 383, 302, 381 (Figure 25) 378*a*, 353, 421.

If a sub-total is to be taken from a column totalizer, the procedure is exactly the same, only with this difference, that instead of the key 329 (Figure 13), the key 226*a'* (Figure 10) is depressed.

As arises from a comparison of Figures 11 and 12, in the taking of totals and sub-totals, the aligning tooth 253, which is held locked by the part 250 (Figure 10) in the unlocking process, i. e. in the rotation of the shaft 142 in the clockwise direction is swung by the pin-slot connection 255, 257 (Figure 11) in the clockwise direction, whereby its tooth 260 acts on the driving wheel 188, standing in engagement with it, in the anti-clockwise direction, i. e. in the arrow direction *x* (Figure 24). By this means the unavoidable small clearance (or back lash) in the play of the wheel is overcome, so that if the driving wheel 189 (Figure 24) located in the lower decimal place is rotated in the arrow direction *x*1, the clearance does not work out in the feeling direction. When, therefore, e. g. the wheel 188H (Figure 23) has been somewhat rotated in the arrow direction *x* by the aligning tooth 253, 260 in engagement with it, so the transfer wheel 475, 474, 473, in engagement with it has been slightly rotated in the arrow direction Z. If, now, the wheel 188*z* is rotated by the driving wheel 189, (Figure 24) in the arrow direction *x*2, so the tens shift tooth 464 (Figure 24) of the part 465 of the wheel 188*z*, on striking the tooth lying in its path of the wheel 475 of the transfer wheel 475, 474, 473, no longer meets with clearance as it was previously removed by the small rotation of the aligning tooth. The result of this is, that the number roller 481, by way of the wheels 477 and 480, standing in engagement with the wheel 188*z*, brings its "0" exactly opposite to the inspection aperture 481*x* (Figure 24). If this arrangement is not provided then in the inspection aperture 481*x*, only half of the "0" and half of the "9" is visible which is naturally undesirable.

The aligning teeth 352 (Figure 13) and 367, for the cross totalizers Q1 and Q2, act obviously in the same manner.

As is now clear from the foregoing, there is a place lost in each totalizer, namely, that of the "blind" roller 493 (Figure 23) through the feeling method, in consequence of locking the next higher decimal place by the aligning tooth.

HUGO ERNST KÄMMEL.

PUBLISHED

MAY 25, 1943.

BY A. P. C.

H. E. KÄMMEL

TOTAL TAKING DEVICE FOR AUTOMATICALLY TAKING TOTALS FOR TYPEWRITING CALCULATING MACHINES

Original Filed May 14, 1934

Serial No. 287,672

15 Sheets-Sheet 1

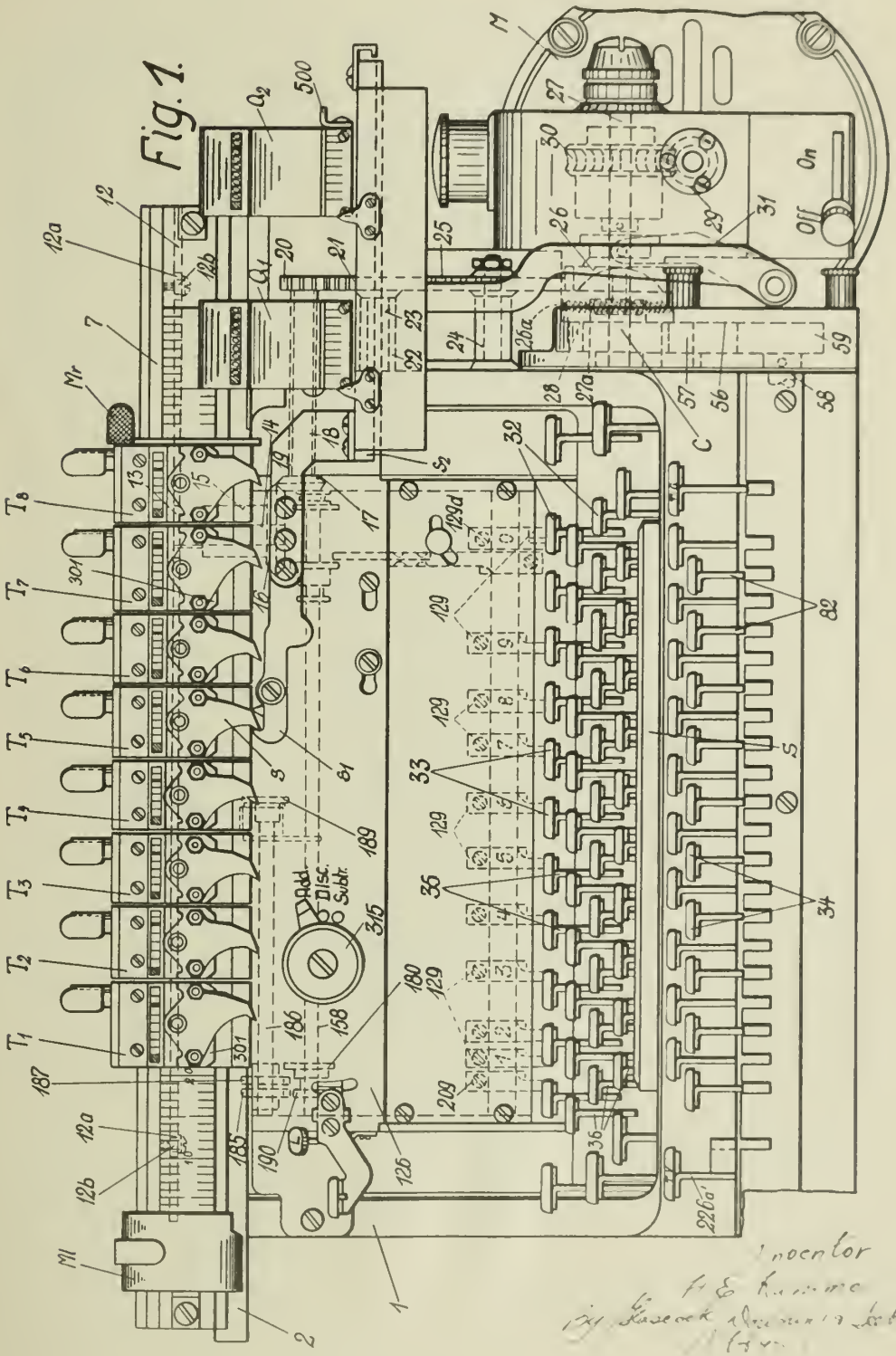

Inventor
H. E. Kämmel
By Hasecock, Dunn & Lotts
Atty.

PUBLISHED

MAY 25, 1943.

BY A. P. C.

H. E. KÄMMEL

TOTAL TAKING DEVICE FOR AUTOMATICALLY TAKING TOTALS FOR TYPEWRITING CALCULATING MACHINES

Original Filed May 14, 1934

Serial No. 287,672

15 Sheets-Sheet 2

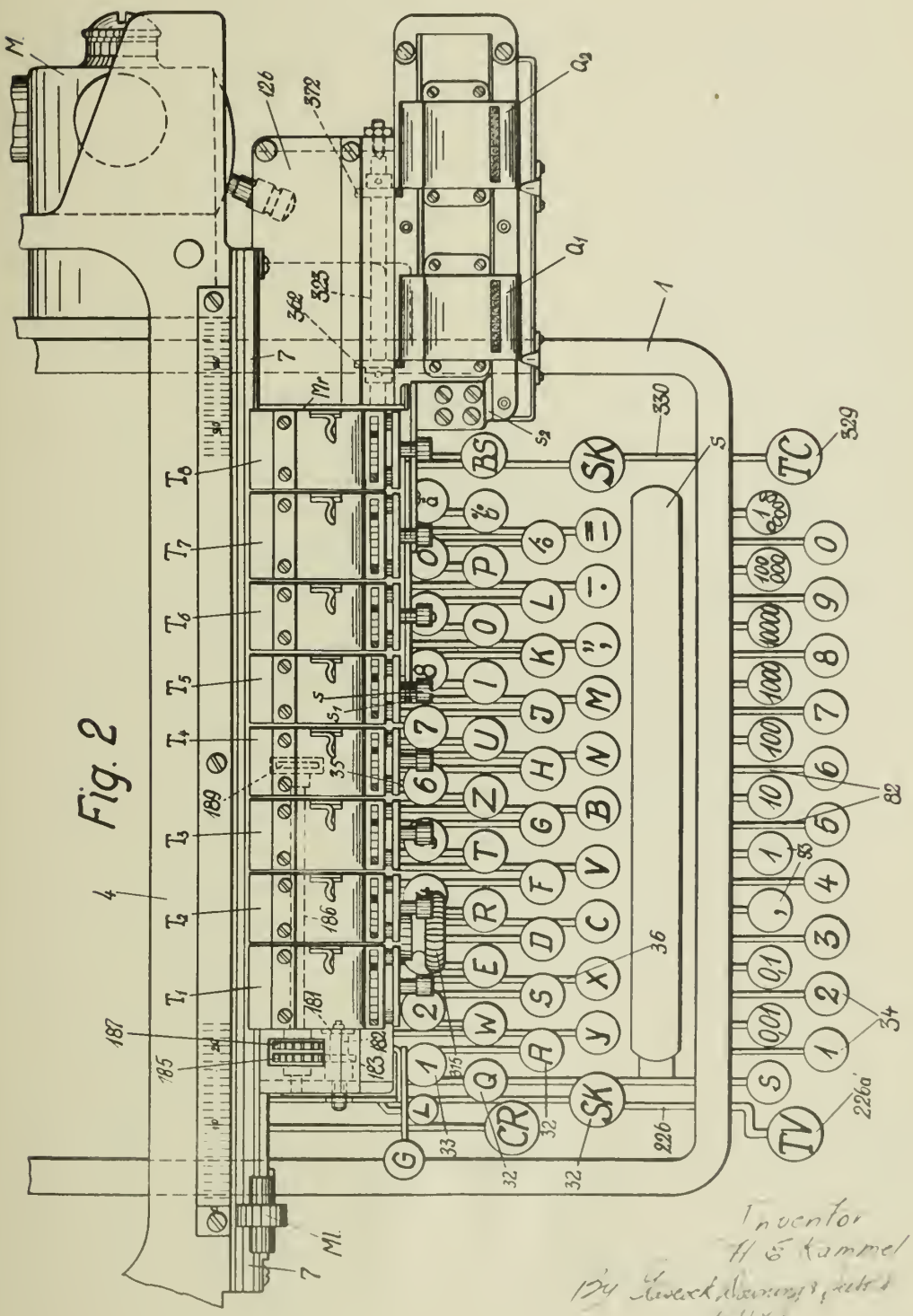

Inventor
H. E. Kämmel
By Howard, Dearing & Howard
Atty.

PUBLISHED

MAY 25, 1943.

BY A. P. C.

H. E. KÄMMEL

TOTAL TAKING DEVICE FOR AUTOMATICALLY TAKING TOTALS FOR TYPEWRITING CALCULATING MACHINES

Original Filed May 14, 1934

Serial No. 287,672

15 Sheets-Sheet 3

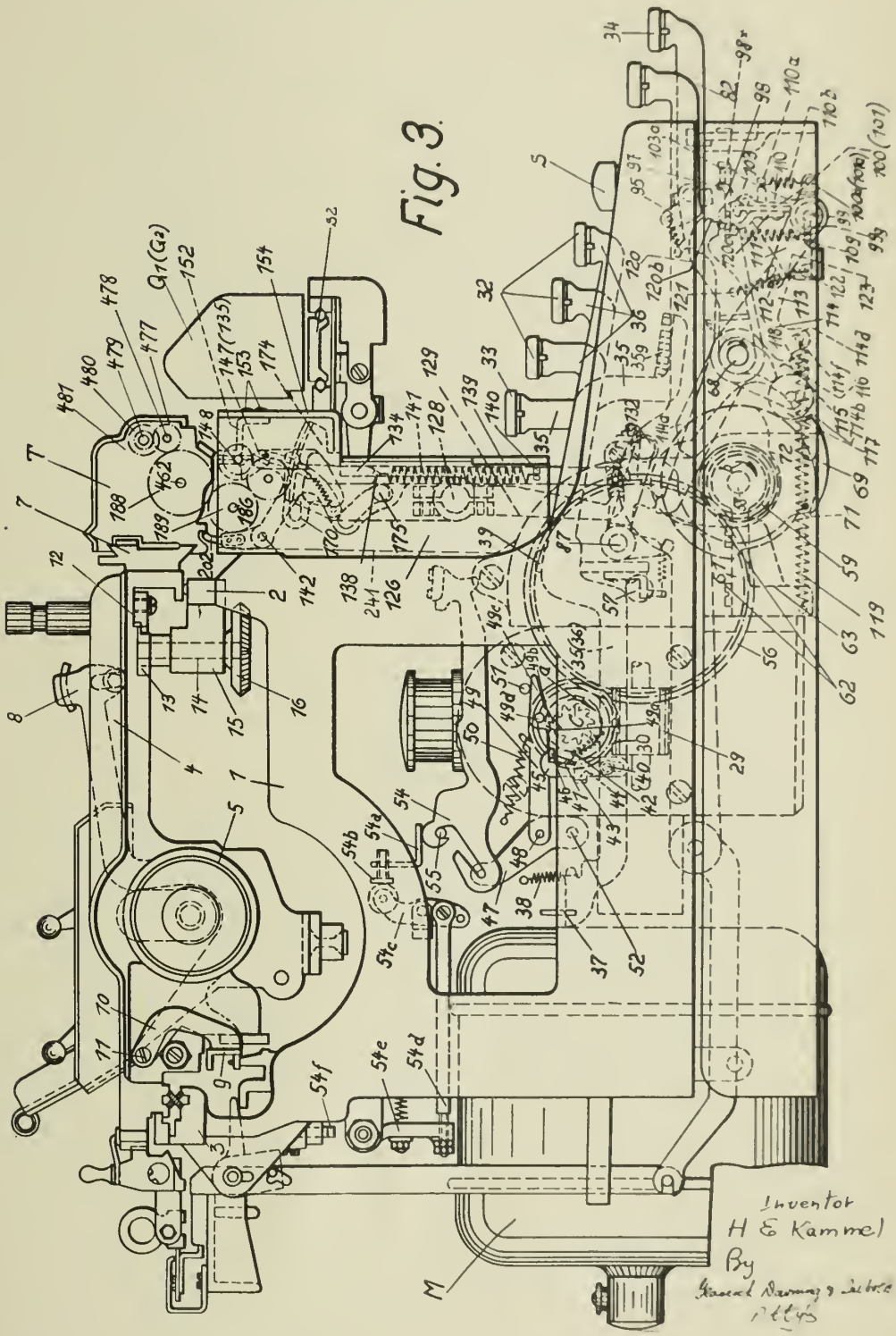

Inventor
H E Kammel
By
Marcel Denning & Lebre
Attys

PUBLISHED

MAY 25, 1943.

BY A. P. C.

H. E. KÄMMEL

TOTAL TAKING DEVICE FOR AUTOMATICALLY TAKING TOTALS FOR TYPEWRITING CALCULATING MACHINES

Original Filed May 14, 1934

Serial No. 287,672

15 Sheets-Sheet 4

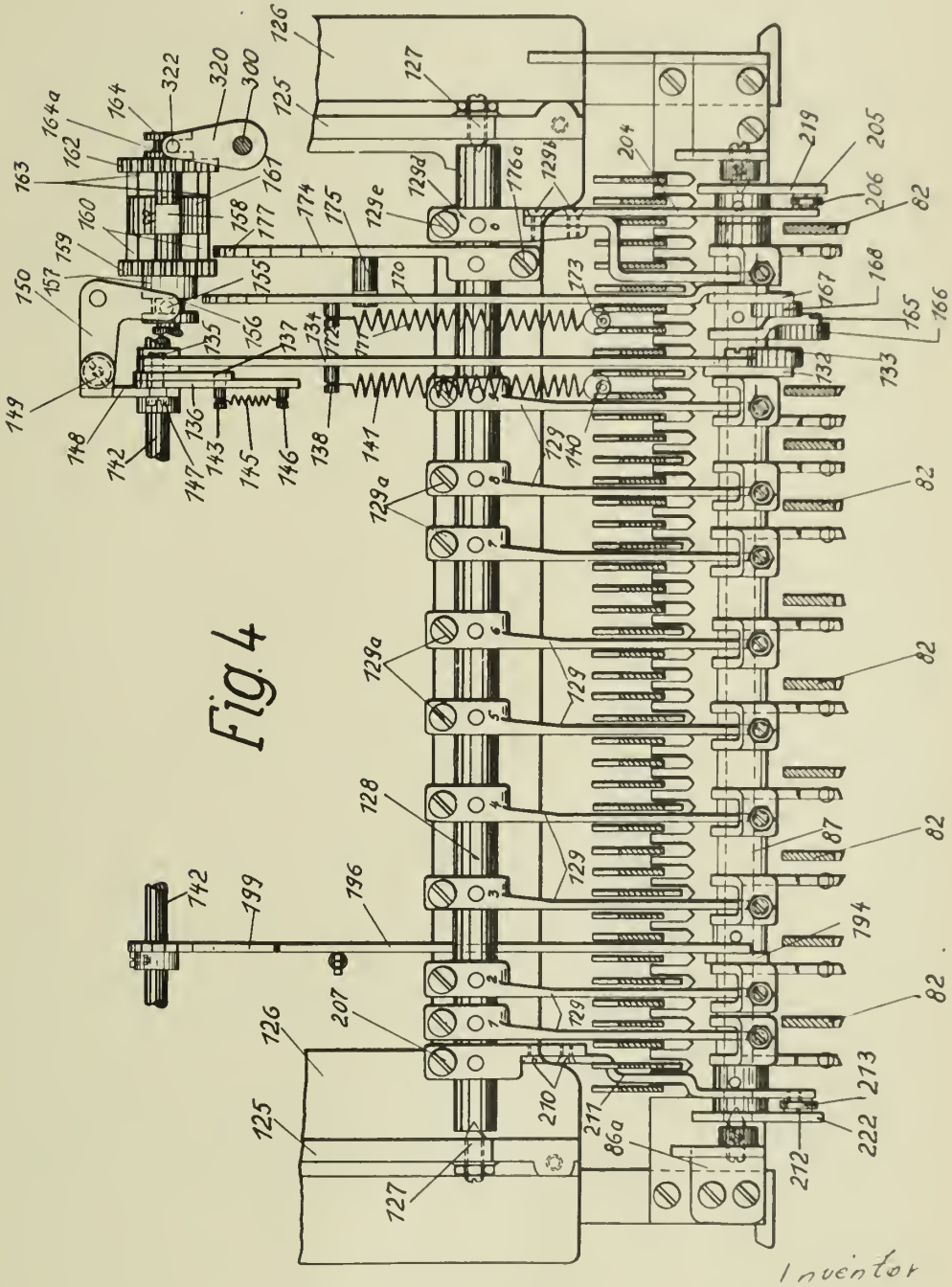

Fig. 4

Inventor
H. E. Kammel
By Gaeck Downing & Lebold
Attys

PUBLISHED

MAY 25, 1943.

BY A. P. C.

H. E. KÄMMEL

TOTAL TAKING DEVICE FOR AUTOMATICALLY TAKING TOTALS FOR TYPEWRITING CALCULATING MACHINES

Original Filed May 14, 1934

Serial No. 287,672

15 Sheets-Sheet 5

Fig. 5.

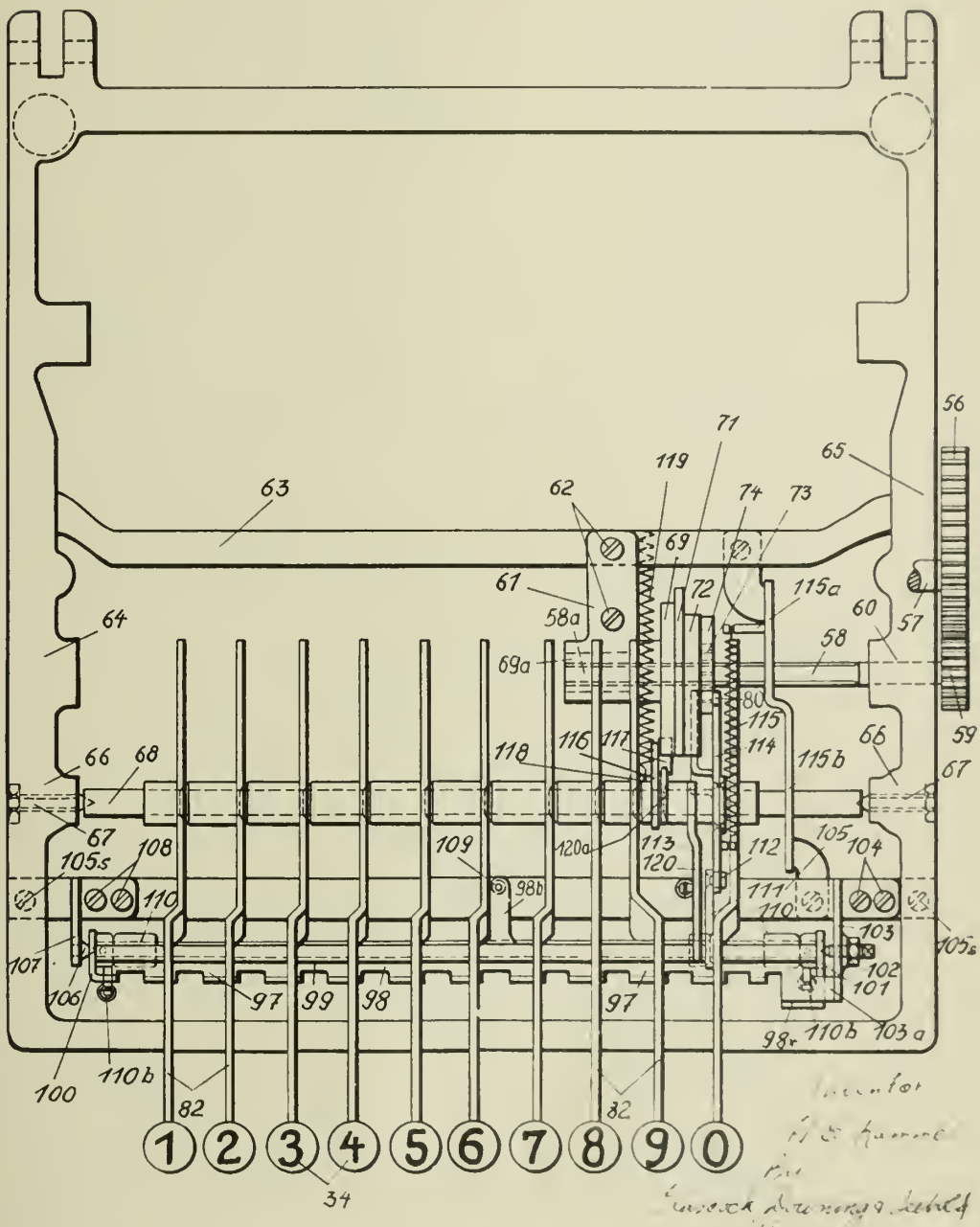

PUBLISHED

MAY 25, 1943.

BY A. P. C.

H. E. KÄMMEL

TOTAL TAKING DEVICE FOR AUTOMATICALLY TAKING TOTALS FOR TYPEWRITING CALCULATING MACHINES

Original Filed May 14, 1934

Serial No. 287,672

15 Sheets-Sheet 6

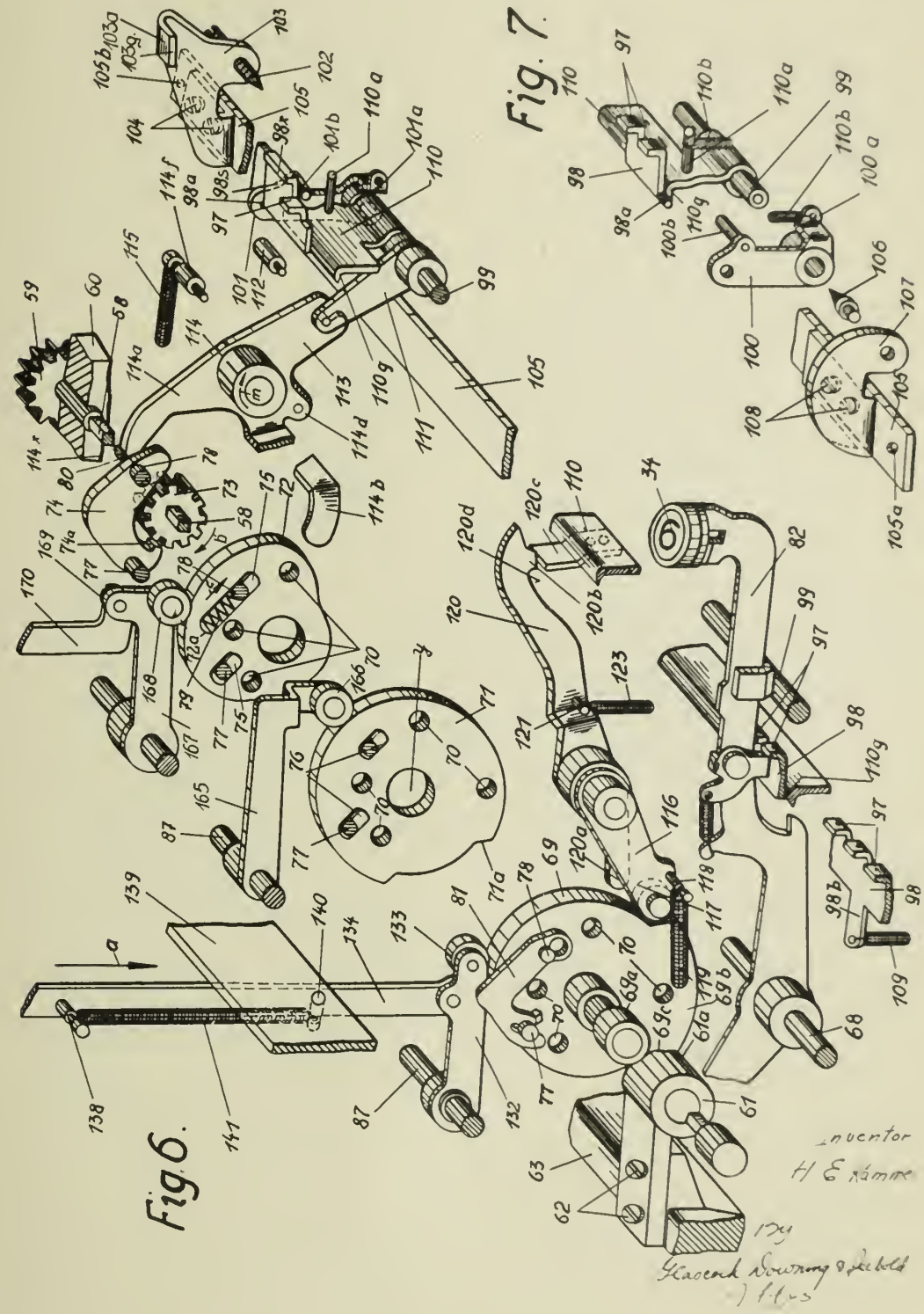

Inventor
H E Kämmel
By
Hazard Downing & Seibold
Attys

PUBLISHED

MAY 25, 1943.

BY A. P. C.

H. E. KÄMMEL

TOTAL TAKING DEVICE FOR AUTOMATICALLY TAKING TOTALS FOR TYPEWRITING CALCULATING MACHINES

Original Filed May 14, 1934

Serial No. 287,672

15 Sheets-Sheet 7

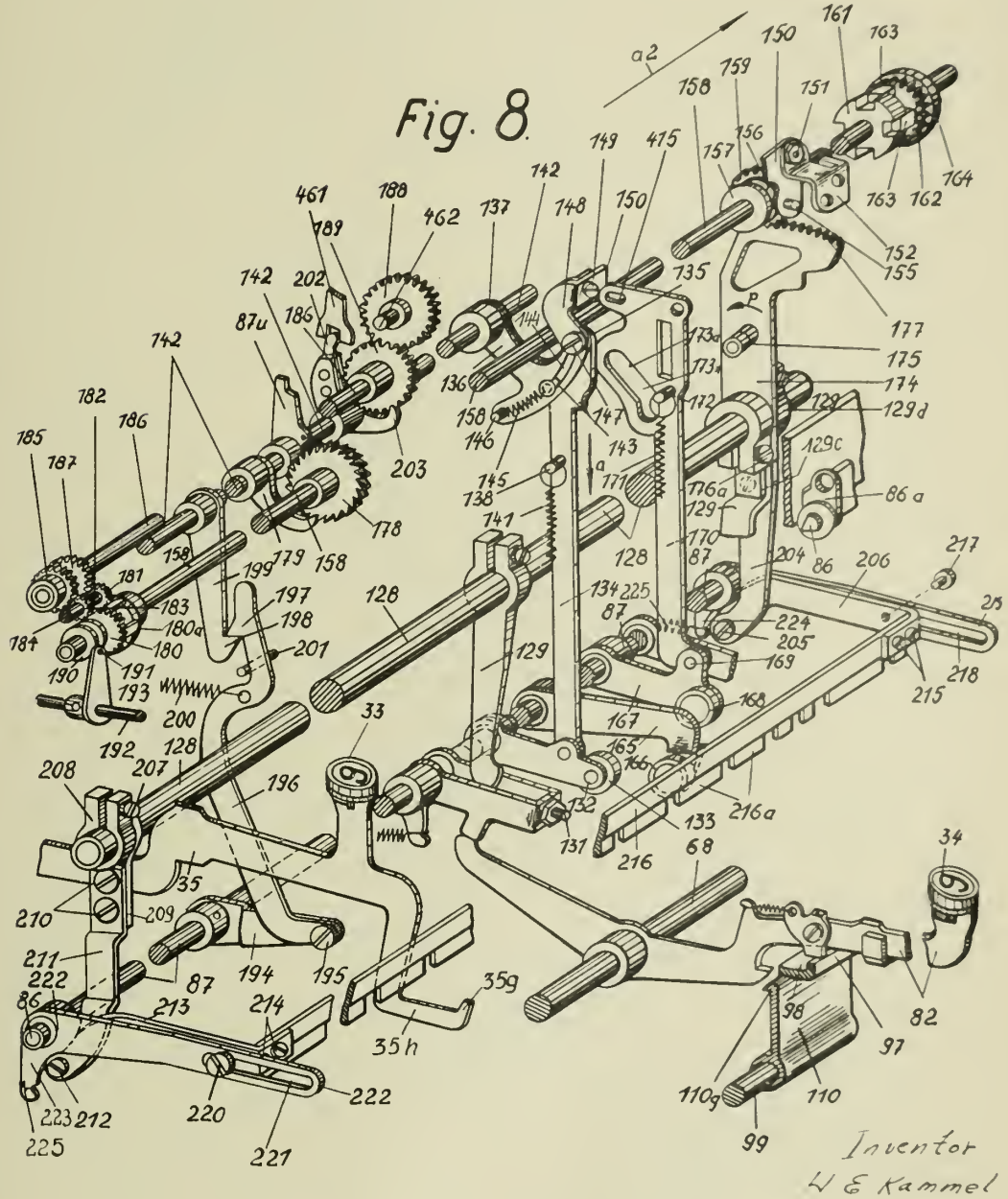

Inventor
H E Kammel

By
Hiscock Downing & Leitch
Attys

PUBLISHED

MAY 25, 1943.

BY A. P. C.

H. E. KÄMMEL

TOTAL TAKING DEVICE FOR AUTOMATICALLY TAKING TOTALS FOR TYPEWRITING CALCULATING MACHINES

Original Filed May 14, 1934

Serial No. 287,672

15 Sheets-Sheet 8

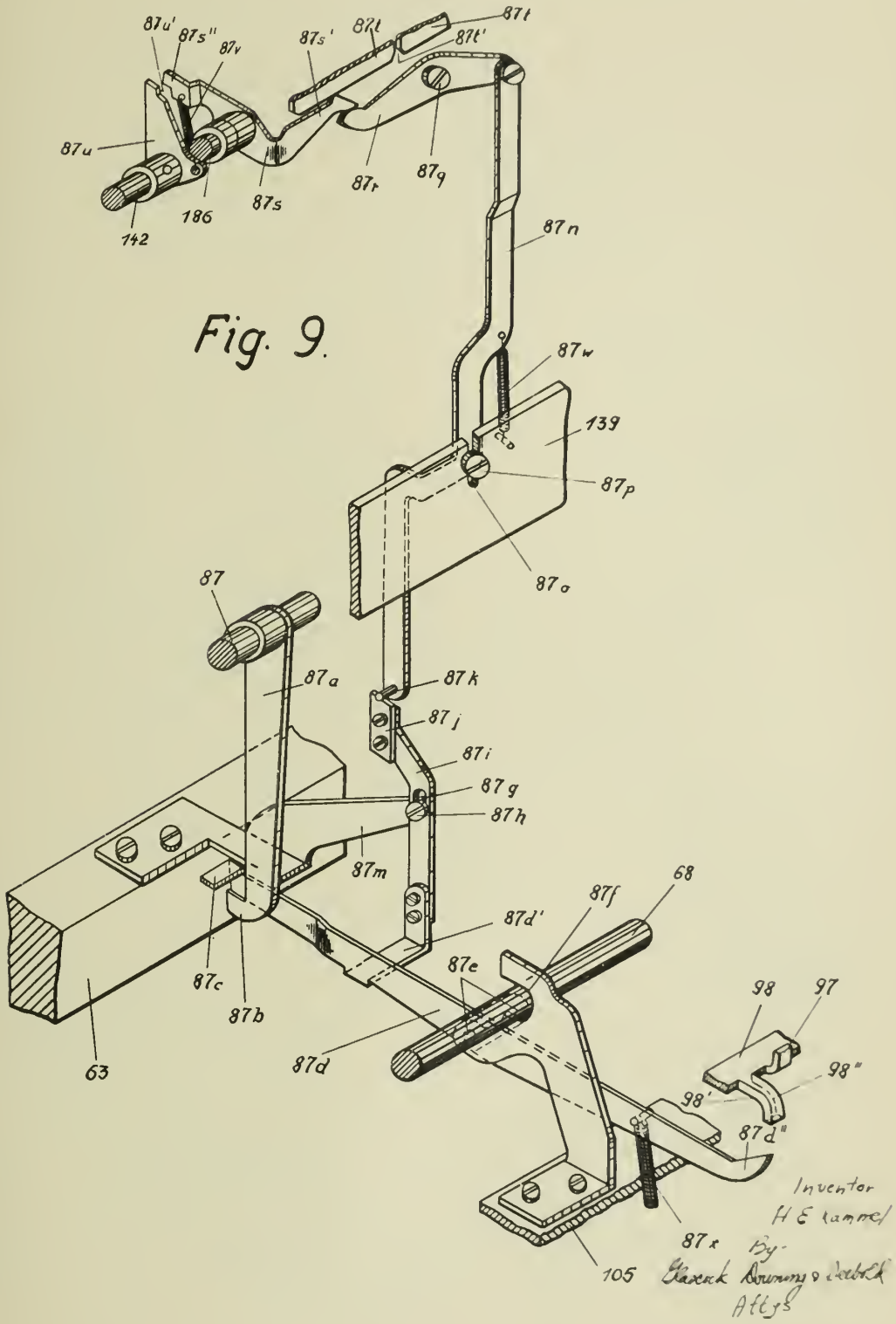

Fig. 9.

Inventor
H E Kammel
By
Glascock Downing & Seebold
Attys

PUBLISHED

MAY 25, 1943.

BY A. P. C.

H. E. KÄMMEL

TOTAL TAKING DEVICE FOR AUTOMATICALLY TAKING TOTALS FOR TYPEWRITING CALCULATING MACHINES

Original Filed May 14, 1934

Serial No. 287,672

15 Sheets-Sheet 9

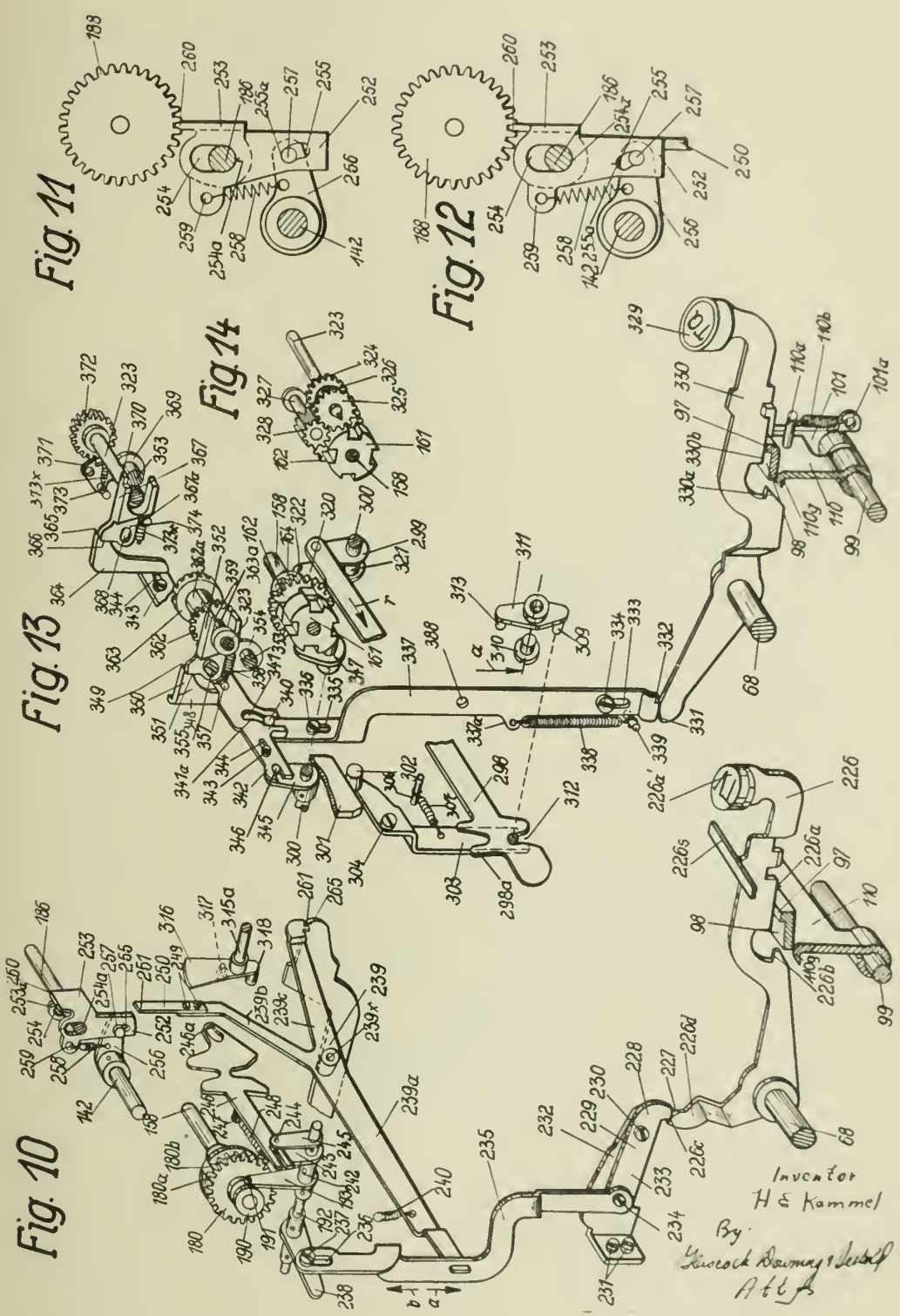

PUBLISHED

MAY 25, 1943.

BY A. P. C.

H. E. KÄMMEL

TOTAL TAKING DEVICE FOR AUTOMATICALLY TAKING TOTALS FOR TYPEWRITING CALCULATING MACHINES

Original Filed May 14, 1934

Serial No. 287,672

15 Sheets-Sheet 10

Fig. 15

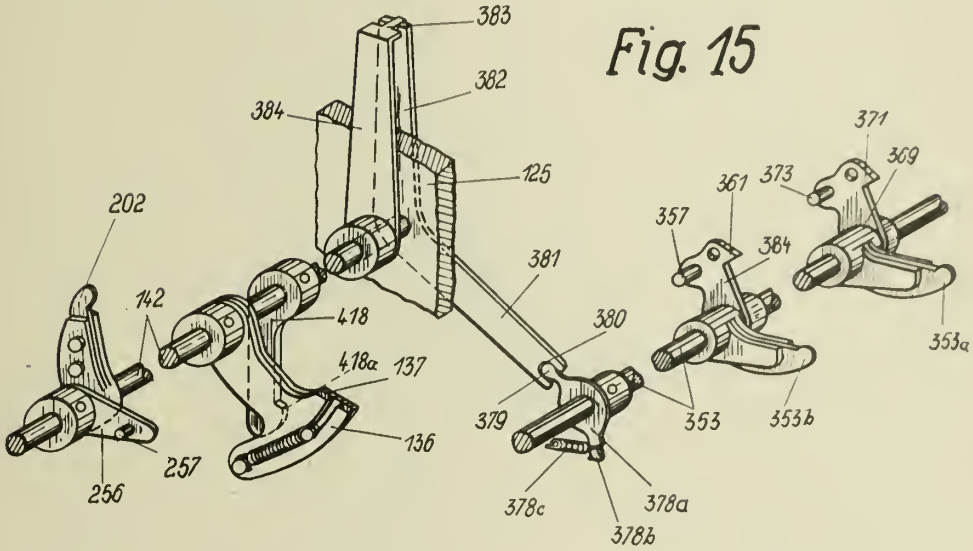

Fig. 16

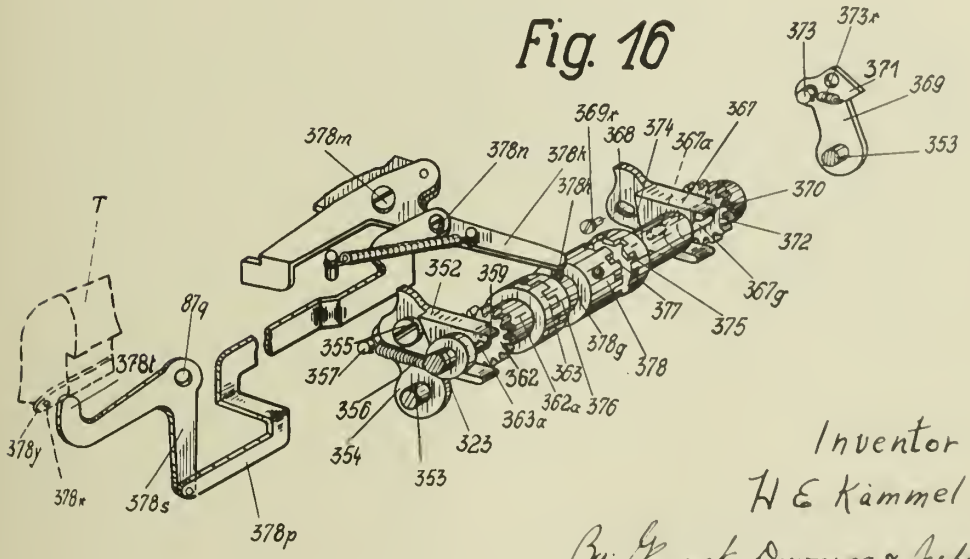

Inventor
H E Kämmel
By Glascock Downing & Seebold
Attys

PUBLISHED

MAY 25, 1943.

BY A. P. C.

H. E. KÄMMEL

TOTAL TAKING DEVICE FOR AUTOMATICALLY TAKING TOTALS FOR TYPEWRITING CALCULATING MACHINES

Original Filed May 14, 1934

Serial No. 287,672

15 Sheets-Sheet 11

Fig. 17

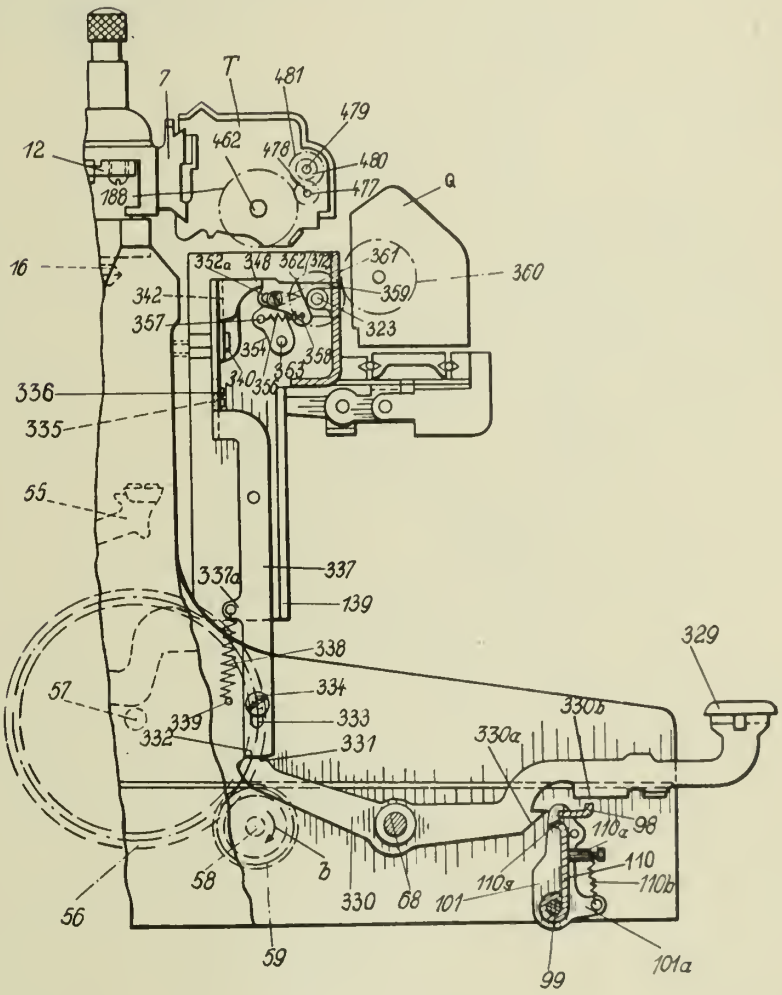

Inventor
H E Kammel
By Glascock Downing & Seebold
Attys

PUBLISHED

MAY 25, 1943.

BY A. P. C.

H. E. KÄMMEL

TOTAL TAKING DEVICE FOR AUTOMATICALLY TAKING TOTALS FOR TYPEWRITING CALCULATING MACHINES

Original Filed May 14, 1934

Serial No. 287,672

15 Sheets-Sheet 12

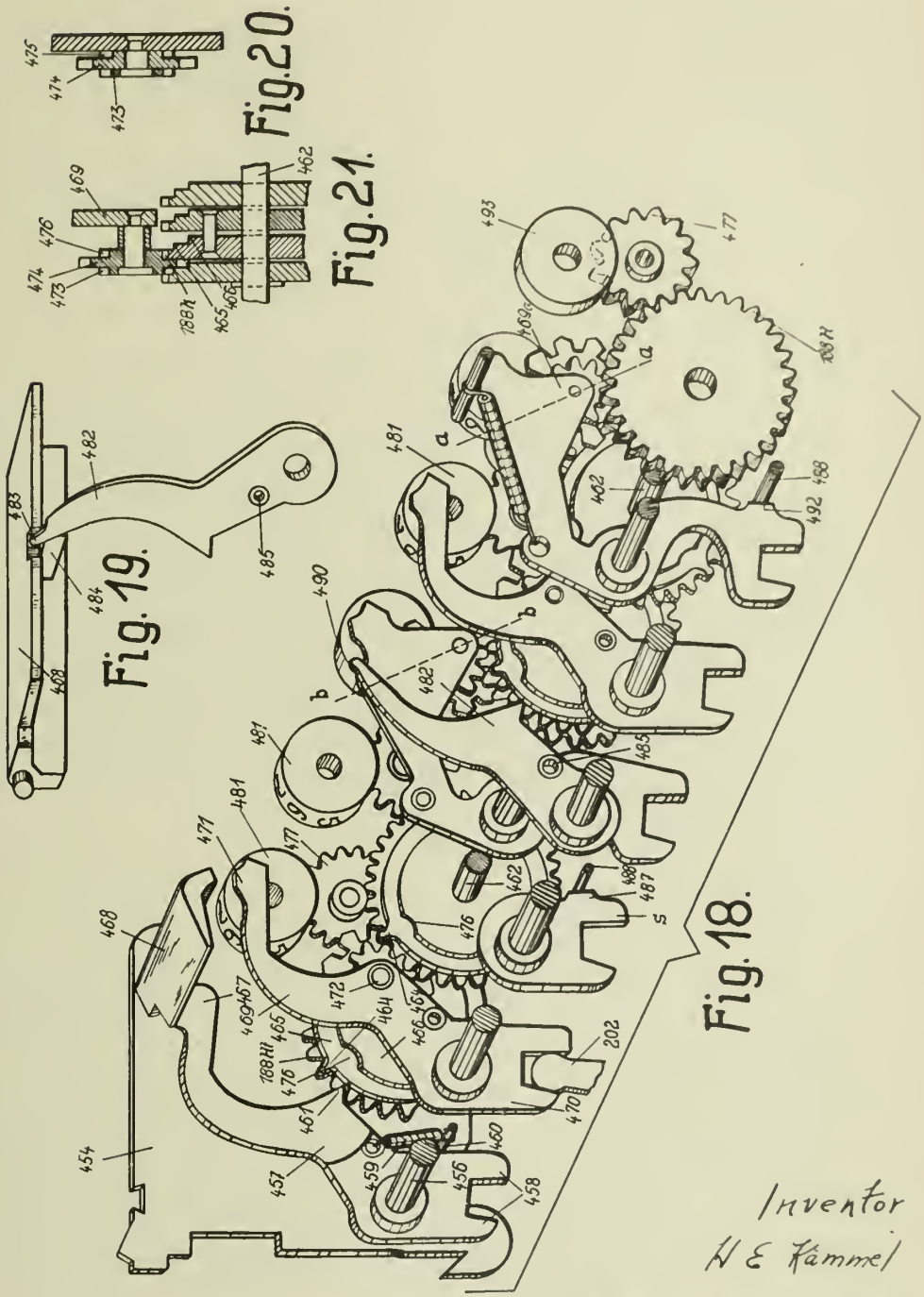

Inventor
H E Kämmel
By Hascock Downing & Seebold
Attys.

PUBLISHED

MAY 25, 1943.

BY A. P. C.

H. E. KÄMMEL

TOTAL TAKING DEVICE FOR AUTOMATICALLY TAKING TOTALS FOR TYPEWRITING CALCULATING MACHINES

Original Filed May 14, 1934

Serial No. 287,672

15 Sheets-Sheet 13

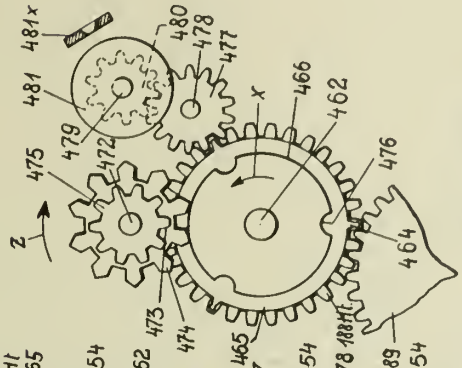

Fig.24.

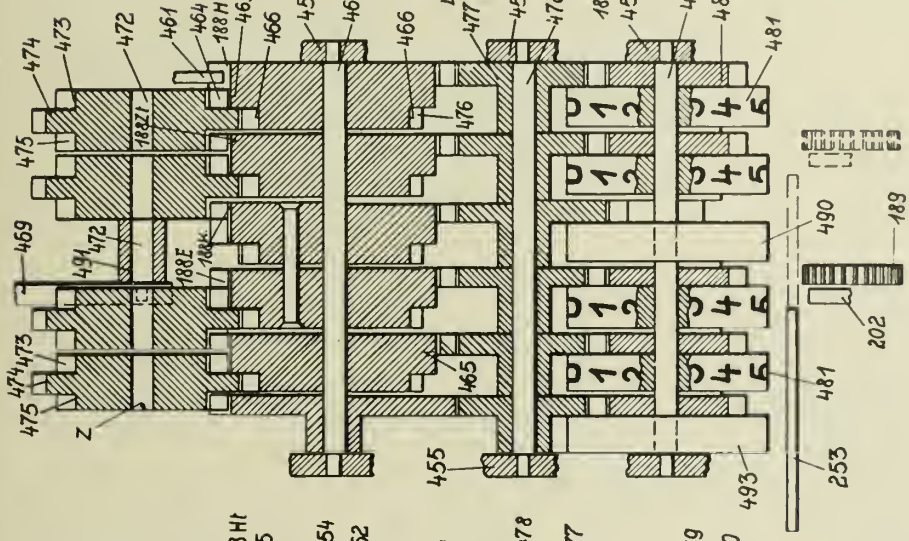

Fig.23

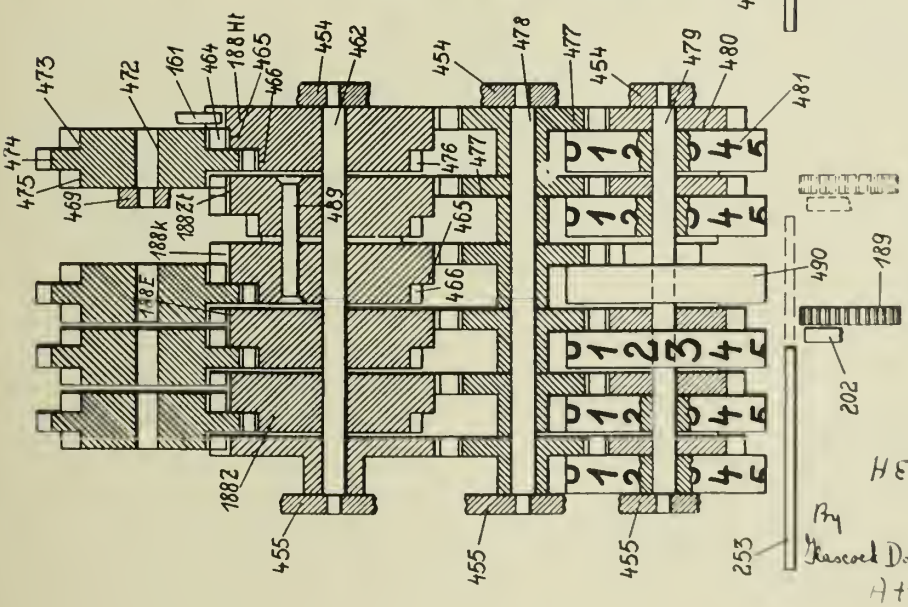

Fig.22.

Inventor
H E Kämmel
By
Rescorla Downing Sutro
Attys

PUBLISHED

MAY 25, 1943.

BY A. P. C.

H. E. KÄMMEL

TOTAL TAKING DEVICE FOR AUTOMATICALLY TAKING TOTALS FOR TYPEWRITING CALCULATING MACHINES

Original Filed May 14, 1934

Serial No. 287,672

15 Sheets-Sheet 14

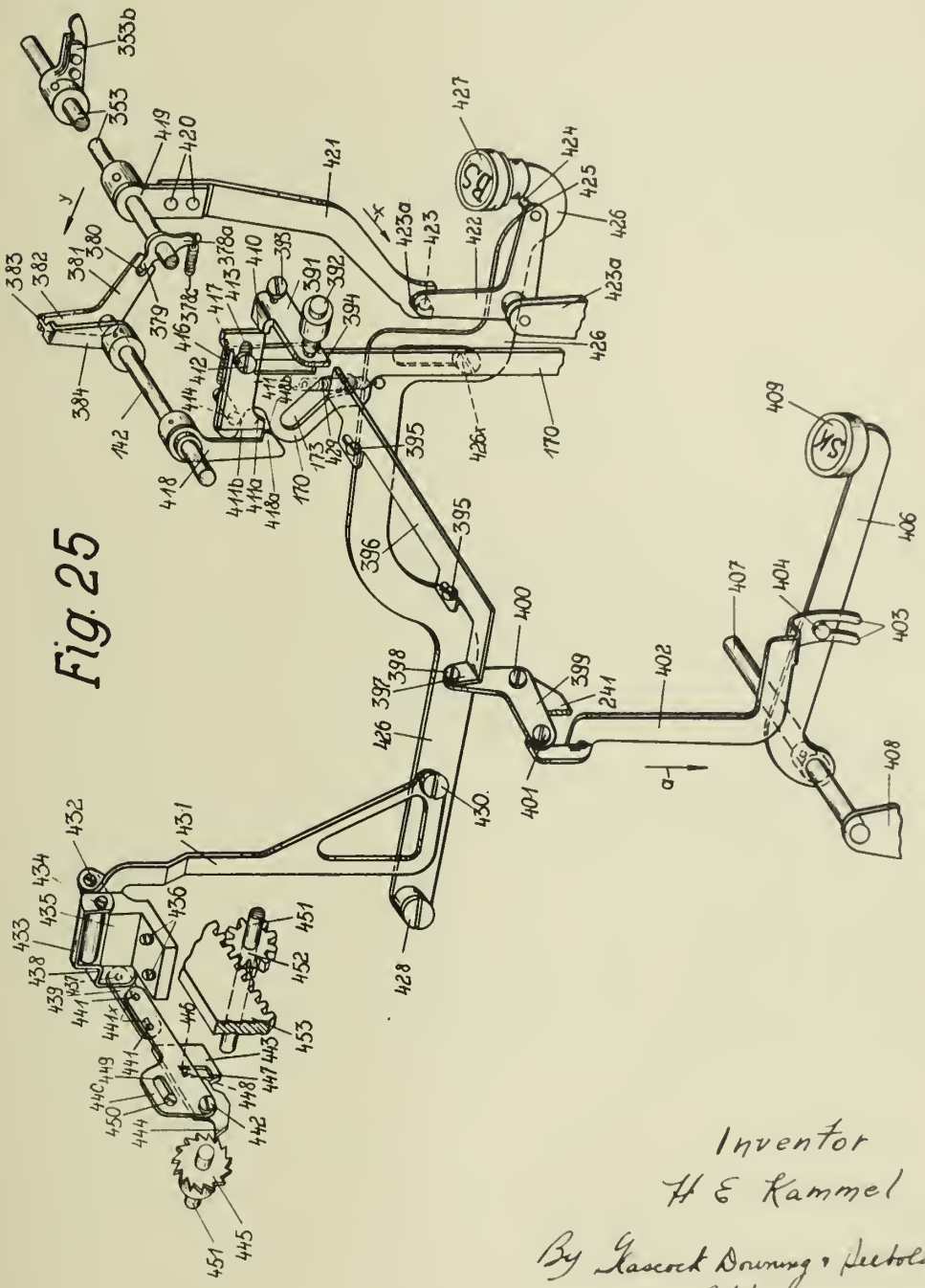

Fig. 25

Inventor
H E Kammel
By Glascock Downing & Seebold
Attys.

Fig. 26

1	2	3	4	5	6	7	8	9	10	11
Name	№	Month	Gross salary	Taxis	Sick fund	Assurance for employees	Supple-ments	Remainder	Net-salary	Sum of all Suplements
O. Schmidt	15	Mai	200.–	10.00	6.00	4.00	3.75	0.55	184.30*	4.30*

Fig. 27

Typing line	Col	№ Column. Totalizer	Reading Column. Totalizer	Type of Calc. Cross-Tollr. Q1	Type of Calc Cross-Tollr. Q2	Reading Cross Totalizer Q1	Reading Cross Totalizer Q2	Clear sign from Cross Totalizer
I	1 to 3	Name, number and month have to be registered.						
I	4	T_1	200.00	A	E	200.00	Zero	
I	5	T_2	10.00	S	E	190.00	Zero	
I	6	T_3	6.00	S	E	184.00	Zero	
I	7	T_4	4.00	S	E	180.00	Zero	
I	8	T_5	3.75	A	A	183.75	3.75	
I	9	T_6	0.55	A	A	184.30	4.30	
I	10	T_7	184.30	S	E	comes to zero	4.30	Q_1
I	11	T_8	4.30	E	S	Zero	comes to zero	Q_2

Inventor
H. E. Kammel
By Kascock Downing & Seebold
Attys

Published May 25, 1943

Serial No. 287,893

ALIEN PROPERTY CUSTODIAN

GUIDEWAYS FOR SLIDING WINDOWS

Pierre Mesnel, Colombes, France; vested in the Alien Property Custodian

Application filed August 2, 1939

Hitherto guideways for sliding windows, in particular of automobiles, have been delivered to the manufacturer or to the body-maker in the shape of a more or less long, but generally straight strip. The operative who is entrusted with the mounting shapes said strip according to the contour of the window opening to be fitted, after having cut it to length, and then fixes it to the frame of the window opening. This mounting work requires a certain amount of skill on the part of the operative, particularly when it is required to fit window openings having a curved contour, like those of the so-called streamline modern automobiles.

In practice, it frequently occurs that instead of making the guideway accurately follow the rounded contour of the opening, the operative bends it too suddenly, so that angular bends are formed that are subsequently detrimental both to the correct sliding of the window and to the appearance of the body.

The present invention overcomes these drawbacks. It consists in manufacturing, in the factory, in their final shape, the guiding frames which are intended to be used to support windows, in particular of automobile vehicles, by winding a continuous strip of guideway on a drum whereof the cross-section is, at least over a portion thereof, shaped like the frames.

A multiplicity of such frames are thus obtained side by side on the drum, and it then suffices to separate them from the drum and cut them up in order to obtain the finished frames.

The invention also relates to the apparatus for manufacturing guiding frames for sliding windows according to this process, and which is characterized in particular by the following points, considered separately or in combination:

1. A resiliently mounted roller bears the guide strip against the drum as it reaches same;

2. The drum is provided with a helical rib, the cross-section of which is the conjugate of that of the guideway;

3. The pressure roller is a shaping roller which presses the faces of the guideway against the corresponding faces of the rib;

4. The cross-section of the drum is of the shape of two frames placed endwise, so that after the winding operation it suffices to effect two longitudinal cuts in order to remove the frames from the drum and cut them at the same time to length;

5. The cutting up is effected by means of wheels provided for the purpose and mounted on carriages that move longitudinally;

6. The drum is provided with longitudinal grooves, for relieving the wheels.

In the ensuing description, which is made by way of a non-limitative example, reference is had to the accompanying diagrammatical drawing. In said drawing:

Fig. 1 is a general view;

Fig. 2 is a view on a larger scale of the drum and of its immediately associated members, at 90° to the previous view, and with parts shown in section;

Fig. 3 shows an elevational view of the metal core of a contour ribbon;

Fig. 4 is a section along 4—4 of Fig. 3;

Fig. 5 is a diagram relating to a modification of the apparatus;

Fig. 6 is an elevational view of a solid metal core reinforcing a guideway treated by means of the apparatus according to Fig. 5;

Fig. 7 is a section along 7—7 of Fig. 6;

Fig. 8 is a section along 8—8 of Fig. 6;

Fig. 9 is a section along 9—9 of Fig. 6;

Fig. 10 is a section along 10—10 of Fig. 6;

Fig. 11 is a section along 11—11 of Fig. 6.

The thin metal strip 1, which forms the framework of the guideway, is obtained from a reel 2 rotatably mounted about a spindle 3. The metal strip 1 passes through a train of wheels 4 which effects the mechanical treatment thereof: cutting, marginal embossing, etc.

In the case of a relatively thick metal strip, one of the pairs of wheels may be used to form transverse slots in the central portion, in order to facilitate subsequently forming it into a channel.

The metal strip thus treated 5, then passes through a machine 6 which is known per se, for example a rubber moulding machine with a square head or a sizing machine.

The metal strip thus provided with a resilient material, 7, then passes through a second train of wheels 8 in which it is covered with felt or other textile material, 9, which is supplied by a reel 10 rotatably mounted about a spindle 11.

The strip 12 thus completely equipped passes through a train 13 of shaping wheels, or profiling machine, which give it a channel-shaped cross-section.

It is the guideway strip 14 which issues from the train 13 that is delivered such as it is, or after cutting to length if necessary, to the manufacturer or body-builder.

According to the invention, the guideway 14 which issues from the train of wheels 13, is conveyed towards a drum 15, the general transverse

sectional shape of which reproduces the shape of two guiding frames placed end to end, that it is desired to obtain.

On the surface 16 of the drum 15 is provided a projecting rib 17 which is the conjugate of the guideway. Two longitudinal grooves 18 and 19 intersect said rib along two diametrically opposite generatrices, so as to limit the shape of the frames to be obtained.

The drum 15 is carried by a hollow shaft 20 which is internally tapped and which is supported by a shaft 21 that is mounted and locked in supports 22 and 23. The shaft 21 is threaded to correspond with the tapping of the hollow shaft 20.

The support 22 is extended by an upright 24 from which issue two arms 25 and 26 through which pass rods 27 and 28 that terminate by rollers 29 and 30 rotatably mounted about pins 31 and 32. The cross-section of said rollers is such that they press the three faces of the channel-shaped guideway against the corresponding faces of the rib 17. Springs 33 and 34 constantly urge the rollers 29 and 30 against the surface of the drum 15. The arms 25 and 26 are so located that the rollers 29 and 30 press the guideway 14 against the rib 17 as soon as said guideway reaches the drum, as shown in Fig. 1.

On the shaft 20 is keyed a gear 35 which co-operates with a gear 36 which is provided with thrust cheeks 37 and 38 and which is driven by an intermediate shaft 39, but in such a manner as to be able to slide along the same by means of grooves such as 40. The shaft 39 is rotatably mounted in bearings 41 and 42 and is driven by means of a pinion 43 which is fixed on said shaft and which co-operates with a pinion 44 fast on a driving shaft 45.

Carriages 46 and 47 adapted to move on rails 48 and 49 are arranged longitudinally on either side of the drum 15. Said carriages carry cutting wheels 50 and 51 which are driven, for example, by electric motors 52 and 53 mounted on said carriages.

At the beginning of the work, the strip of guideway 14 is brought to the drum 15 and introduced into the space between the wheel 30 and the rib 17. The drum 15 being set in rotation, the strip is carried along, passes under the wheel 29 and winds round the drum. If necessary, its free end may moreover be fixed to the drum. As the rotation of the drum continues, the strip of guideway 14 continues to wind helically, the drum 15 simultaneously moving in the longitudinal direction owing to its screw and nut mounting, so that the input conditions of the strip 14 on the drum always remain the same. During this phase, of course, the carriages 46 and 47 have been moved along their rails so as not to hinder the rotation of the drum 15.

When the drum 15 is completely covered, the rotation is stopped in the position shown in full lines in Fig. 1, so that the longitudinal grooves 18 and 19 are in register with the wheels 50 and 51. Said wheels are set in rotation by the electric motors 52 and 53 and the carriages 46 and 47 are moved slowly, so that the strip of guideway which is wound on the drum is cut into two series 54 and 55 of finished guiding frames, that it suffices to remove from the drum 15.

It should be observed that the forcing of the guideway 14 under pressure against the rib 17 enables a ribbon 9 made of cloth to be used which, if desired, is not cut diagonally the direction of the threads.

The invention is not strictly limited to ways for sliding windows proper, but a tends to the adjacent article called conto bon or water-tight joint, which is used fo ing and guiding the sliding windows o mobiles. Two of such contour ribbons, a parallel, perform the same function as a way of channel-shaped cross-section. I tion to guiding windows, such ribbons used for guiding by sliding panels made metal, wood or the like, for example w known as opening roofs in the art o mobile body building. The surface 16 drum is in this case provided with a groove of which the shape corresponds ribbon and in which same is lodged action of one or a plurality of rollers of priate shape.

This metal core is obtained from a plan strip or ribbon on which are formed long folds or beadings, two in the example which are directed obliquely in the figu a modification, said folds could more perpendicular to the folds of the meta In any case, said folds are advantageously posed to each other in a contiguous r The marginal bands 58 and 59 are en that is to say that they are provided with versely extending corrugations.

A contour ribbon provided with a me according to the invention is remarka particular, by the ease with which it compressed, even by hand, to follow th varied contours, the radii of curvature o may be very small. The corrugated m bands impart to it considerable flexibili in combination, the intermediate folds o ings prevent any untimely bending or of the ribbon. The contiguous position beadings enables the ribbon to be moun curately and quickly without the shaping ribbon substantially modifying the relat sitions of the beadings which may be con to be secured to each other and determ general shape of the ribbon as a whole.

The presence of the folds or beadings to the ribbon the property of retaining its so that, for example, when it has been it suffices to fix it at a few points in o secure it sufficiently to the surface to w is fitted.

In a modification, the metal core is simp vided, on the one hand with one or a plur juxtaposed folds, and on the other hand single corrugated band bordering one of th of the fold or folds.

A particularly advantageous metal c reinforcing such a ribbon is shown in eleva Fig. 3 and in section in Fig. 4. It is obtaine a metal strip on which are erected two posed beadings 56 and 57, the longitudina 58 and 59, on either side of said beadings milled.

It has been found that the guiding frame ufactured according to the invention have tain degree of flexibility at their rounded c whereas their straight portions retain th degree of rigidity as the initial guideway frames can therefore be readily fitted by h window openings whereof the contour is r actly that for which they were intende which differ by the relative angles of their s portions.

Starting from this remark, the invention also provides for the modification of manufacture of guideways for sliding windows according to which, after having been given its final cross section, for example U-shaped, the guideway is systematically deformed in such a manner as have angles at close intervals, for example in the shape of a close sinusoid, and is then straightened, out to rectilinear shape.

In the embodiment shown in Fig. 5, the guideway issuing from the train **13** is fed along a sinusoidal path by the co-operation of forming wheels **60**, **61**, the first also acting as a finishing wheel for the train **13**, and of the pressure roller **62**. The bent guideway is immediately straightened by the action of three straightening rollers **63**, **64** and **65**.

The guideway thus obtained, which has the appearance of a usual straight guideway, is however distinguished therefrom by the following essential point: owing to the molecular work undergone by the metal during the deformation of the guideway, for example into a close sinusoid, the final guideway can be readily deformed by hand to fit the contours of the window openings.

Such a process enables the simplest possible form of channel section metal core to be used, that is, to say having continuous faces without slots or perforations and which are substantially plane, that is to say without corrugations, and in which there are no special means that were hitherto provided for imparting the necessary flexibility, and which nevertheless has sufficient flexibility for a large number of uses.

In this connection, the invention enables use to be made of guideways having a continuous metal core, that is to say which is not cut out, which had to be given up for equipping modern automobiles, owing to their rigidity. A guideway provided with a continuous core which, according to the invention, has been subjected to the above treatment, has a similar flexibility to that of guideways provided with a cut out core and can advantageously replace same.

Fig. 5 shows diagrammatically an elevational view of a continuous core that is suitable to be used, and Figs. 7 to 11 show sections of same. Said core is simply obtained from a metal strip on which have been formed a central milling **66**, two lateral millings **67** and **68** and two marginal millings **69** and **70**. Said milling can be obtained in a single operation, by passing between two rollers of corresponding shape. The channel cross-section is obtained by folding along the lines **71** and **72** separating the central milling from the lateral millings. The marginal millings **69** and **70** impart the necessary stability of shape to the finished flexible guideway.

In a modification, the core is provided in combination, with plane portions and embossed portions.

PIERRE MESNEL.

PUBLISHED

MAY 25, 1943

BY A. P. C.

P. MESNEL

GUIDEWAYS FOR SLIDING WINDOWS

Filed Aug. 2, 1939

Serial No.

287,893

2 Sheets-Sheet 1

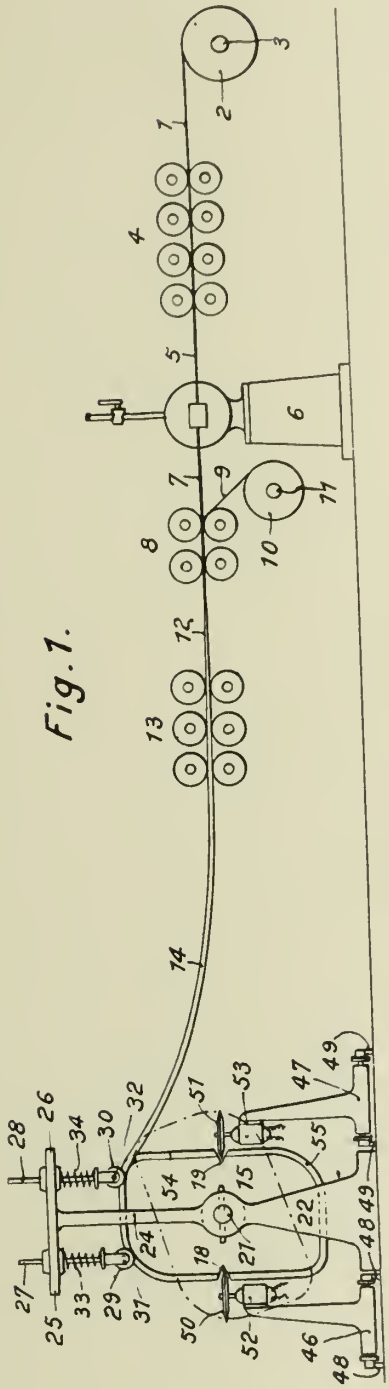

Fig. 1.

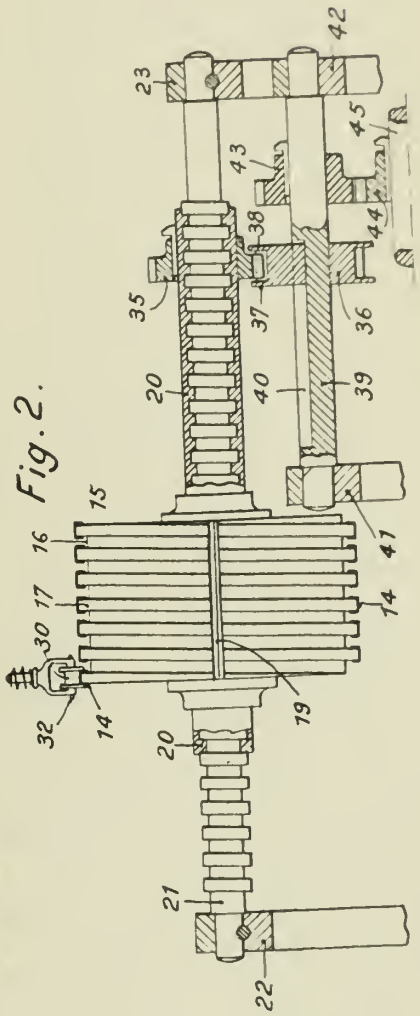

Fig. 2.

INVENTOR:
PIERRE MESNEL
BY Haseltine, Lake & Co.
ATTORNEYS

PUBLISHED
MAY 25, 1943
BY A. P. C.

P. MESNEL

GUIDEWAYS FOR SLIDING WINDOWS

Filed Aug. 2, 1939

Serial No.
287,893
2 Sheets-Sheet 2

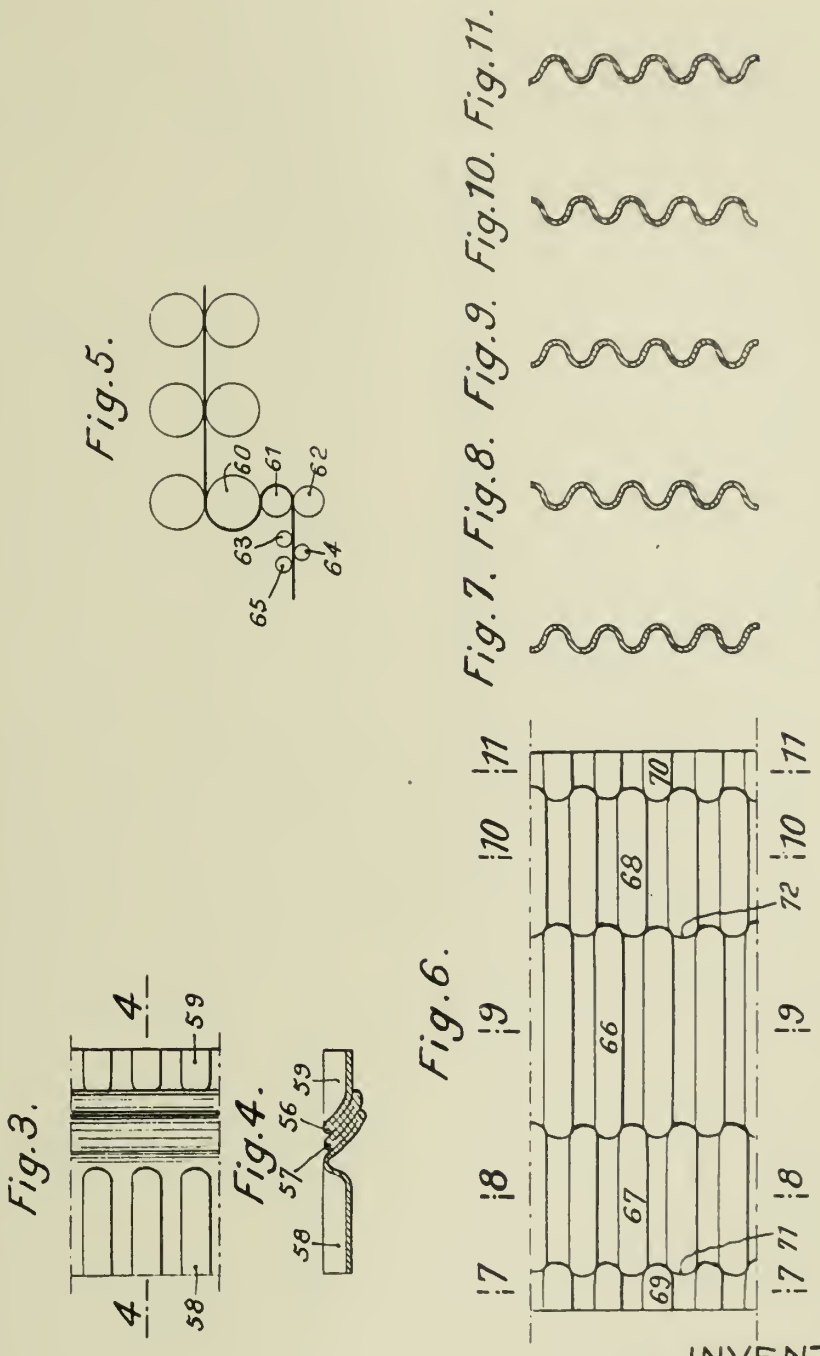

INVENTOR:
PIERRE MESNEL
BY Haseltine, Lake & Co.
ATTORNEYS

Published May 25, 1943

Serial No. 288,057

ALIEN PROPERTY CUSTODIAN

CALCULATING MACHINE

Ulrich Eichler, Glashutte in Saxony, Germany;
vested in the Alien Property Custodian

Application filed August 2, 1939

This invention relates to calculating machines provided with a motor driven carriage shifting mechanism, in which means are provided thru which the carriage shifting mechanism is actuated, and an adjustable abutment is provided on the carriage adapted to engage with a member which controls the carriage shifting mechanism, in order to bring the carriage to a stop. Prior arrangements act only on a single direction of movement of the carriage, thus limiting the use of such older arrangements. An object of the invention, therefore, is to provide an arrangement by which it is possible to always bring the carriage into a selectively predetermined position, either to the left or to the right.

An object of the invention is to provide means whereby the shift drive, by means of a feeler, actuates the left or right shifting mechanism for the carriage according to whether an adjustable abutment provided on the carriage is at the right or left of a member controlling the carriage drive. The arrangement is thus applicable not only generally, but especially permits, for example, the adding of the items set up in a calculating machine with the decimal position observed, without any special attention.

A further object is a construction in which the carriage shift drive may be set in operation automatically at the end of a previous calculation. It is also possible to provide a special handle by means of which said shift drive may be actuated.

A still further object is to provide a feeler in the form of a V-shaped rocking lever, with which a shoulder-like projection or the like mounted on the adjustable abutment of the carriage cooperates, and which controls the shift drive by a rod arrangement.

Furthermore, since the control member sets in operation the calculating mechanism after the carriage shifting mechanism has been brought to a stop, in order to transfer the value set up in the keyboard to the totalizer, it is an object of the invention to provide means for clearing the value set up in the keyboard before the transfer rotation of the calculating shaft. In this manner it is possible, in certain calculations, to prevent the value still set up in the keyboard from being transferred to the totalizer.

With this and other objects in view, which will become apparent from the detailed description below, the invention is illustrated in the drawings which show one form of the invention, somewhat similar to that shown in my co-pending application Ser. No. 213,279, filed June 11, 1938.

Fig. 1 is a partial lateral elevation with the casing removed and parts omitted for greater clarity.

Fig. 1A is a continuation of Fig. 1 to the right.

Fig. 2 is a vertical cross section on line II—II of Fig. 1.

Fig. 3 is a partial front elevation of the machine viewed in the direction of the arrow *a* on Fig. 1.

Fig. 4 is a partial plan view looking in the direction of the arrow *b* on Fig. 1.

Fig. 5 is a partial side view with parts omitted and showing the elements in a different operative position.

Fig. 6 is a partial rear elevation viewed in the direction of the arrow *c* on Fig. 1.

The construction described below is based on the arrangement forming the subject matter of application Ser. No. 213,279 above mentioned, with, however, the following modifications.

Co-operating with the pin **308** on the adjustable slide **307** is a counter-abutment **350** which has two V-shaped surfaces **351** directed toward each other. The counter-abutment **350** is carried by a lever **352** fixed on the shaft **220**.

Moreover, the bar **214** acts on a pin **353** on a lever **354**. Lever **354** is journalled oscillatably at **355** on the machine frame and has a forked end **356** engaging over a pin **357** on a lever arm **358**, which latter is connected with a U-shaped supporting member **359**, which is journalled oscillatably on the connecting bar **360** provided on the machine frame. Journalled on the plate-like front part **361** of the supporting member **359**, by means of a pivot pin **362**, is a lever plate **363**, the form of which is shown on Fig. 3. It terminates above in two abutments **364** and **365** between which the recess **366** is provided. Engaging with the downwardly directed extension of the plate **363**, at **367**, is a bar **368**, the other end of which is pivoted at **369** to a lever **370**. The latter is fixed on a shaft **371** which is journalled on the one hand in the connecting bar **360** and on the other in the frame plate **372**. A feeler plate **373**, cut out V-shaped, is attached at the rear upper end of the shaft **371**. Co-operating with the V-shaped feeler plate **373** is the lower end or the downwardly directed end of the extension **374** which is attached to the slide **307** and carries the pin **308**.

As stated in application Ser. No. 213,279, a latch lever **100** (see Fig. 2) is coordinated with the key levers **97**.

Application Ser. No. 213,279 relates in detail only to means which initiates the shift to the right of the calculating mechanism carriage. As shown on Fig. 2 there is disposed, with respect to Fig. 1, behind the lever plate **106** a corresponding lever plate **375** which carries a pin **376** corresponding to the pin **105**. Pin **376** co-operates with the latch pawl lever **100** which is actuated by the shift key **97**.

Co-ordinated with the lever plate **375** is a pair of levers **377**, **377**, corresponding to the levers **118**, and which cooperate with an extension **378** corresponding to the extension **121**. Extension **378** is on a bar **379** which, with respect to Fig. 1, lies behind the bar **122** and is, moreover, shaped and journalled like the bar **122**. Bar **379** engages by means of a pin **380** with a slide-like bar **381** which, together with the similar bar **126**, is longitudinally slidable in the machine frame (see Fig. 6). Attached to the end of bar **381** is a plate **382** which has a forked end engaging in a groove of the spur gear **131'** mentioned in Ser. No. 213,279. By moving gear **131'** in the direction of the arrow on Fig. 1 a clutch is connected in between the gear **131'** and spur gear **128'** which corresponds substantially to the clutch parts **130** and **132** between the spur gears **131** and **128**.

The pin **109** on the lever arms **110** is, as shown on Fig. 2, so formed as also to engage under the lever plate **375**, so that when the left shift key **6** is depressed, by the rocking of the corresponding latch lever **100**, the lever plate **375** can rock downwardly through the traction of the spring **108** engaging therewith in the direction of the arrow shown on Fig. 1. The pin **109** is swung downwardly and the lever arm **110** and the shaft **111** connected therewith are swung in the direction of the arrow on Fig. 1. The motor is then supplied with current in the manner described in copending application Ser. No. 213,279, and the drive clutch engaged. At the same time, by means of the bar **275** described in Ser. No. 213,279, the calculating mechanism is disconnected and, by means of the rods **379** and **331**, the gears **131'** and **128'** are set in combined rotation. The thereby resulting rotation of gear **128'** shifts the calculating carriage **2** to the left (with respect to Fig. 3).

The above mentioned lever plate **363** is coordinated with the latch levers **100** so that in its two end positions it engages the lever **100** initiating the left or right shift. For example, if the lever plate **363** is in the position shown by full lines on Fig. 3 then, on a rocking movement of the support **359** in the direction of the arrow on Fig. 1, that lever **100** would be actuated which initiates the left shift, while if the plate **363** is in the position shown by dotted lines that lever **100** would be actuated which causes the right shift.

It is to be noted that when, for example, the calculating mechanism carriage is moved manually or by motor from the position of Fig. 3 to the left, the lower end of the plate **374** passes by the curved part **382** of the plate **373**, but strikes against the curved part **383** and thereby rocks plate **373** in the direction of the arrow on Fig. 3, so that the lever plate **363** is carried by the elements **367**—**371** into the dotted line position of Fig. 3.

A leaf spring **384** is attached to the support **359** at one end by means of a screw **385**, and at the other end carries a pin **386** which cooperates with two cap-shaped recesses **387** provided in the rocker plate **363** in order to hold the plate **363** releasably in its two end positions. If the slide **307** is in a position so that the plate **374** occupies, for example, the dotted line position of and if the calculating mechanism carria shifted to the right, the lower end of th **374** passes by the curved part **383** (see dott position of Fig. 3), but contacts with t wardly extending curved part **382** and th **373** is swung back into the position shown lines.

The operation is explained with referen single calculation example:

For example, in making out a statement cost of 21.75 meters at 12.50 Marks per met be found, with 2.75 Marks added for tran tion (postage, freight or the like) and p the result would be as follows:

As marks and pfennigs are involved, a is made only of two of the four decimal after the decimal point, the slide **307** must on the carriage **2** so that the "3" is visible opening **311**, that is, the slide must be that two decimal positions of the totali moved to the right out of the range of t culating mechanism.

Calculation is then done as follows:

First the number of meters is set up keyboard, the "5" in the key bank fart the right, then the "7" in the adjacent ban the "1" and finally the "2," are set up. then multiplied by 1250, with the carriage initial position, so that the value 2 718 750 i in the totalizer at the end of the calcu Corresponding to the two decimal positi the multiplicand as well as the multipli decimal point would be placed between th and the fourth decimal position from the This would indicate that the total was 2 Marks, to which should be added the posta packing charge of 2.75 Marks, with the d point placed in the proper position. This in simple manner, according to the inven that the value 275 is set up in the keybo that the "5" and the "7" are in the first a ond right key banks, for the pfennig calcu and the "2" in the third key bank.

In order to add the supplementary ch the result, with the proper decimal positi calculating carriage which is first in the p in which the three extreme right decima tions are at the right outside of the calc mechanism, first passes to the left for a sh vance, so that the supplementary charge se the keyboard passes to the proper positio is, the decimal point between the "2" and t must align with the decimal point betwe "1" and the "8" in the totalizer. It is the essary only to carry the handle **210** into th tion of Fig. 5, whereby the following autom ly takes place. By actuating the handle described, the plate **208** carrying said ha rocked into the position of Fig. 5, and the bar **214** connected thereto is first depressed shoulder **215** of the bar **214** then strikes t **353**, and the lever **354** is rocked into the p of Fig. 5.

It is here to be noted that the carriage the above multiplication calculation, assu position such that the three decimal posit the farthest right are outside the calc mechanism, and the slide **307** is in the p shown by full lines on Fig. 3.

In said actuation of the handle **210** the plate **363** is thus in the position shown lines, so that when the support **358** is roc the direction of the arrow on Fig. 1, the ext **364**, through the action of the lever **354**,

against the latch lever **100**, which sets in motion the left shift of the calculating machine. Fig. 5 shows how the corresponding lever **100** is rocked by the extension **364**, so that the lever plate **375**, through the traction of its engaging spring **108**, can swing into the position shown in Fig. 5.

When the plate **375** passes into the position according to Fig. 5, the calculating mechanism and the drive motor are connected in by means of the pin **109** in the manner described in application Ser. No. 213,279. Furthermore, when the plate **375** passes to the position of Fig. 5, the rod **379** is actuated and the clutch for the left shift of the carriage is connected in.

In the first revolution of the main shaft **46** the carriage **2** is thus moved for one shift to the left, relative to Fig. 3, so that the slide **307** comes into position above the shaft **371**. In this movement of the calculating carriage the pin **308** on slide **307** contacts with the corresponding inclined surface **351** of the counterabutment **350**, whereby the latter and the lever **352** carrying it are rocked into the dotted line position of Fig. 4. By the rocking of the lever **352** in the direction of the arrow on Fig. 1A and the consequent rocking of shaft **220**, the rod **217** connected therewith by means of the lever **219** is moved to the left in the direction of the arrow on Fig. 1.

Through this movement of the rod **217**, the impact bar **214** is first rocked in the direction of the arrow on Fig. 5, so that the pin **353** is released from the shoulder **215**. The lever **354** is thereby released, so that it can swing back under the traction of the spring **388** engaging therewith into the initial position. The support **359** is again rocked back to the initial position of Fig. 1, so that the abutment **364** releases the corresponding lever **100** whereby, as described in application Ser. No. 213,279, the lever plate **375** which was shortly before rocked back to the initial position, is retained by such co-ordinated lever **100**.

This has the further result of disconnecting the carriage advance at the end of the first revolution of the main shaft. At the same time, in the movement of the rod **217**, the lever **261**, **263** is rocked so that the end **264**, formed as an abutment, passes into the range of the pin **265** on the spur gear **89**. At a given time interval the lever **261**, **263** is then rocked about the pivot point **262** so that the pin **259** engaged thereby is forced to the left which, as described in application Ser. No. 213,279, results in a revolution of the calculating mechanism, through which the value set up in the keyboard is added at the proper decimal position to the previous total, so that finally, at the end of the calculation, that is, after the machine is brought to a stop, the value 274.6250 appears in the totalizer.

If, in further calculating the statement there is to be added to the price obtained from 1.75 meters × 1.25 Marks a further addition of .90 Marks for postage and packing, the procedure is as follows.

The value 1.75 is first set up in the three extreme right key banks of the keyboard. This value is multiplied by a proper operation of the corresponding calculating keys by 1.25. After this multiplication the value in the totalizer is 21875. After clearing the keyboard the supplement of .90 Marks is set up therein, which is done by pressing the "9" in the second key bank from the right. It is to be noted that at the end of the mupltiplication the carriage is in a position such that the two extreme right decimal positions, thus the "75", is outside the range of the calculating mechanism. In this case the calculating machine carriage is already in the proper position, that is, the pin **308** is in front of the counter-abutment **350**, which is thus in the dotted line position of Fig. 4.

If, however, the counter-abutment **350** is in this swung-out position the bar **217** is moved by levers **352** and **219** to the left so that the impact bar **214** assumes the dotted line position of Fig. 1. If the lever handle **210** is actuated, the bar **214** passes freely by the pin **353**, so that lever **354** is not rocked. The carriage shifting mechanism is thus not connected in.

On the other hand, when the rod **217** is moved the abutment end **264** of the lever **261**, **263** contacts the pin **265**, and the lever **261**, **263** is rocked in the direction of the arrow on Fig. 1 about the pin **262**, and this causes a revolution of the calculating shaft, as described in application Ser. No. 213,279, and the value set up in the keyboard is added to that in the totalizer. The amount 3.0875 then appears in the totalizer.

Finally, in a further statement calculation, if it is desired to find the price of 0.75 meters at a price of 0.25 Marks per meter, to which 0.45 Marks are to be added for postage and packing, the procedure is as follows.

First, the 0.75 meters is set up in the keyboard, by depressing the "5" in the extreme right key bank, and the "7" in the adjacent row. Then, with the carriage in the initial position, that is, the carriage is in its extreme left position, the amount is first multiplied by "5," and then, after a movement of the carriage to the right, by "2." The value 1875 thereupon appears in the totalizer. Inasmuch as the carriage, in the multiplication, has moved one position to the right, the slide **307** is in the dotted line position of Fig. 3, and the plate **373** is in the dotted line position. If now, after the value **45** has been set up in the extreme right banks of the keyboard, the handle **210** is swung into the position of Fig. 5, the lever **354** is swung by the bar **214** into the position of Fig. 5.

Since, corresponding to the dotted line position of the plate **373**, the rocker plate **363** also assumes the dotted line position shown in Fig. 3, when the support **359** is rocked by the lever **354** in the direction of the arrow on Fig. 1, the extension **365** strikes the lever **100** which causes a shift to the right of the calculating carriage. Then during the first revolution of the main shaft, the carriage is moved for one position to the right with respect to Fig. 3, so that the slide **307** comes above the shaft **371**. The result thereof is a rocking of levers **352** and **219**, and the bar **217** is moved to the left.

In this movement of the bar **217**, the shoulder **215** on the impact bar **214** releases pin **353**, so that the carriage shifting mechanism is disconnected in the manner described and the calculating mechanism is connected in. Through the movement of the carriage the "1" and the "8" of the value 1875 in the totalizer aligns with the "45" in the keyboard. In the following revolution of the calculating shaft the value .45 Marks is added at the proper positions, so that the value 0.6375 Marks can then be read off in the totalizer.

It is thus apparent that, by means of the present arrangement, values having a widely different number of positions after the decimal point can be added, and the decimal point placed in the proper position.

In order, on actuating the handle **210**, to per-

mit the carriage to pass to the position desired through the setting thereof without the value set up in the keyboard being at the same time carried into the totalizer, there is pivoted on plate **208**, at **389**, a bar **390** which is provided with a shoulder-like extension **391**. This latter extends in the range of a finger-like extension **392** attached to the clearing shaft **205**. As described in application Ser. No. 213,279, when the shaft **205** is oscillated in the direction of the arrow on Fig. 1, the key check bars **200** are carried into the release position.

The free end of the bar **390** is engaged by a cam member **393** which is attached to a shaft **384** journalled in the machine frame, and on which there is also attached a handle **395** which extends outside the cover of the calculating machine.

If the value set up in the keyboard is to be transferred, on the actuation of the hand as was the case in the preceding calculati amples, to the totalizer, then the handl be rocked into the position of Fig. 5, so th shoulder **391** may pass freely by the fing

On the other hand, if there is to be no t of the value still in the keyboard, to the to the handle must be moved into the position in full lines on Fig. 1. The shoulder **391** fore moves in front of the finger **392**. handle **210** is now actuated the clearing **205** is rotated simultaneously therewith, a value set up in the keyboard is cleared bef calculating shaft begins to revolve. It is noted that after the shoulder **391** has caus clearing revolution of the shaft **205**, the sh **391** slides off over the finger **392**, so th shaft **205** can snap back to the starting p

ULRICH EICH

PUBLISHED
MAY 25, 1943.
BY A. P. C.

U. EICHLER
CALCULATING MACHINE
Filed Aug. 2, 1939

Serial No.
288,057
5 Sheets-Sheet 1

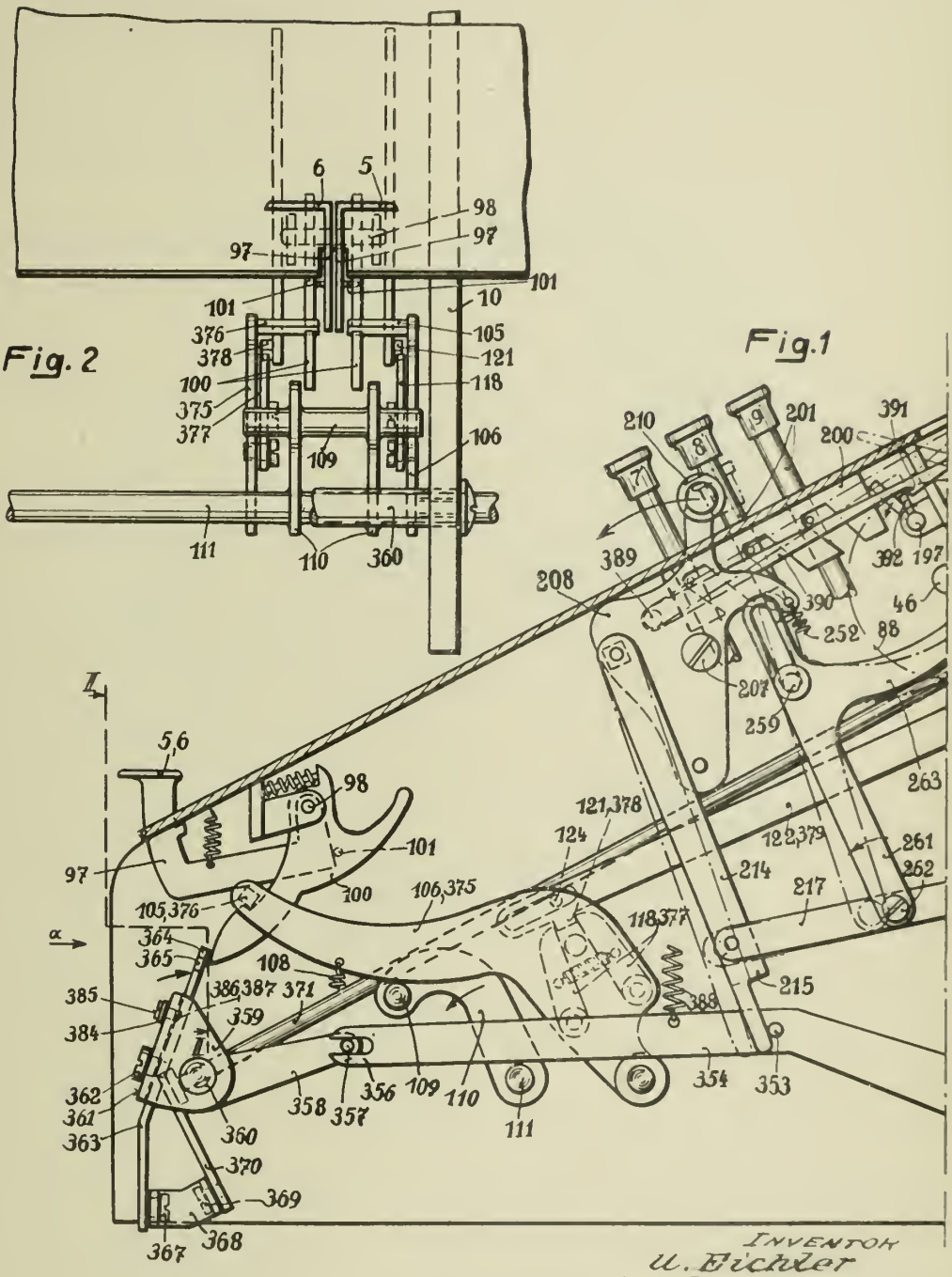

INVENTOR
U. Eichler
BY John B. Reid
ATTORNEY

PUBLISHED
MAY 25, 1943.
BY A. P. C.

U. EICHLER
CALCULATING MACHINE
Filed Aug. 2, 1939

Serial No.
288,057
5 Sheets-Sheet 2

Fig. 1A

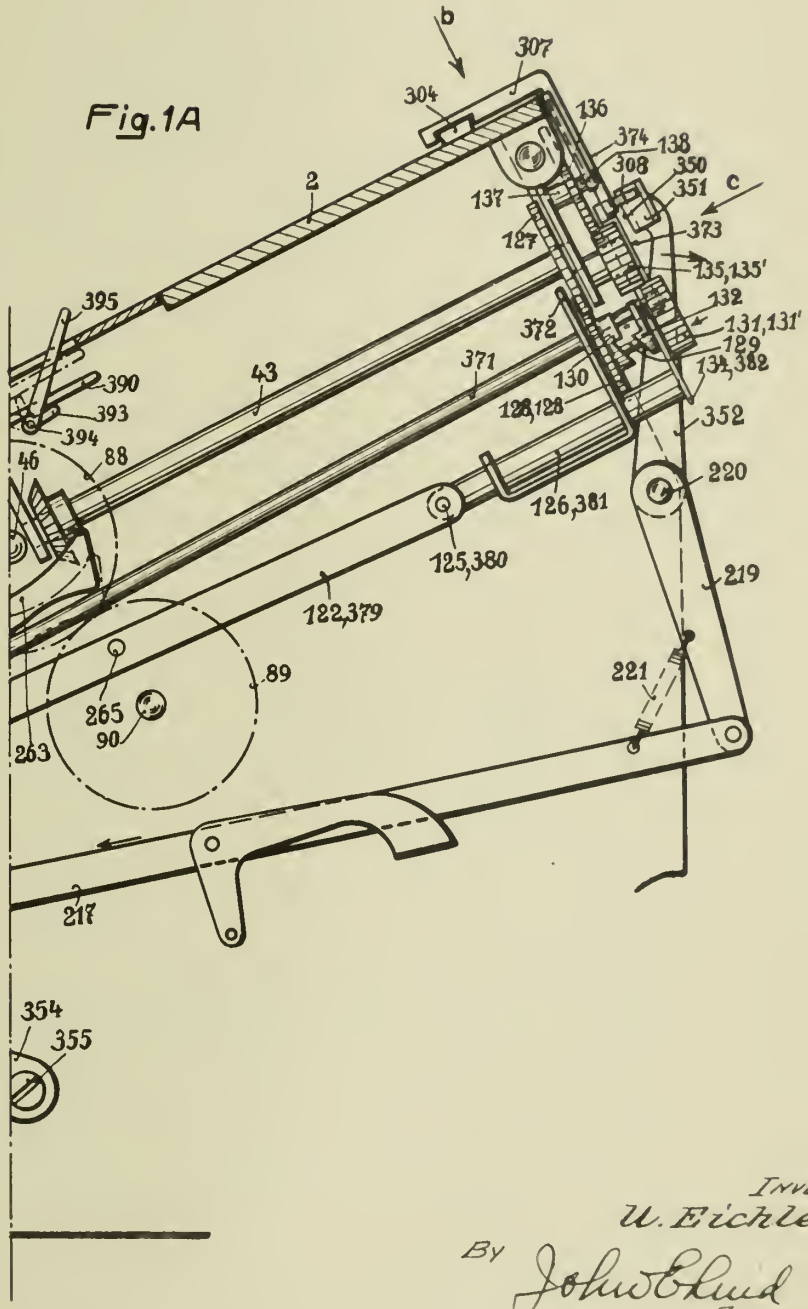

INVENTOR
U. Eichler
By John E. Lind
ATTORNEY

PUBLISHED
MAY 25, 1943.
BY A. P. C.

U. EICHLER
CALCULATING MACHINE
Filed Aug. 2, 1939

Serial No.
288,057
5 Sheets-Sheet 3

Fig. 3

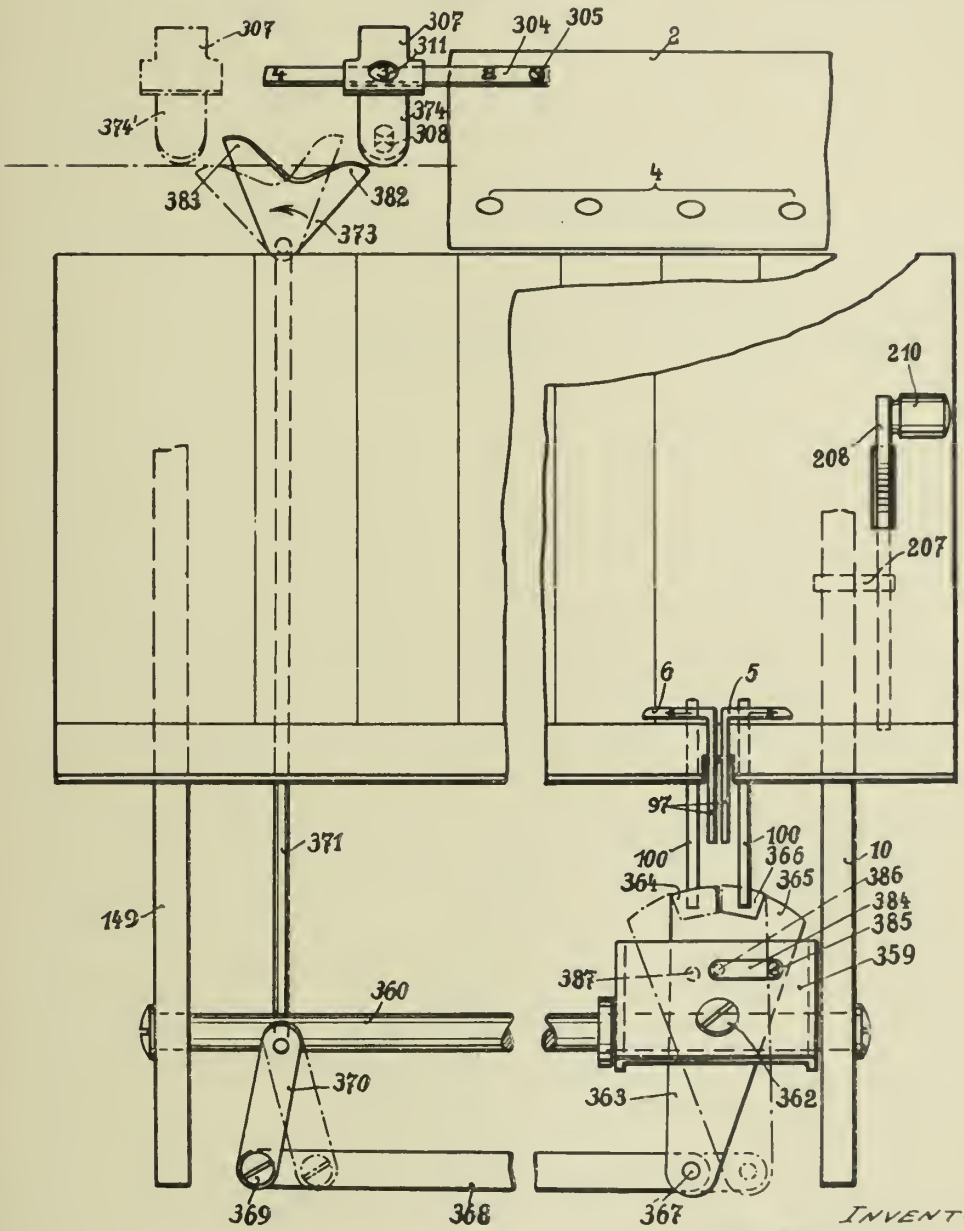

INVENTOR
U. Eichler
BY
John C. Lud
ATTORNEY

PUBLISHED
MAY 25, 1943.
BY A. P. C.

U. EICHLER
CALCULATING MACHINE
Filed Aug. 2, 1939

Serial No.
288,057
5 Sheets-Sheet 4

Fig. 4

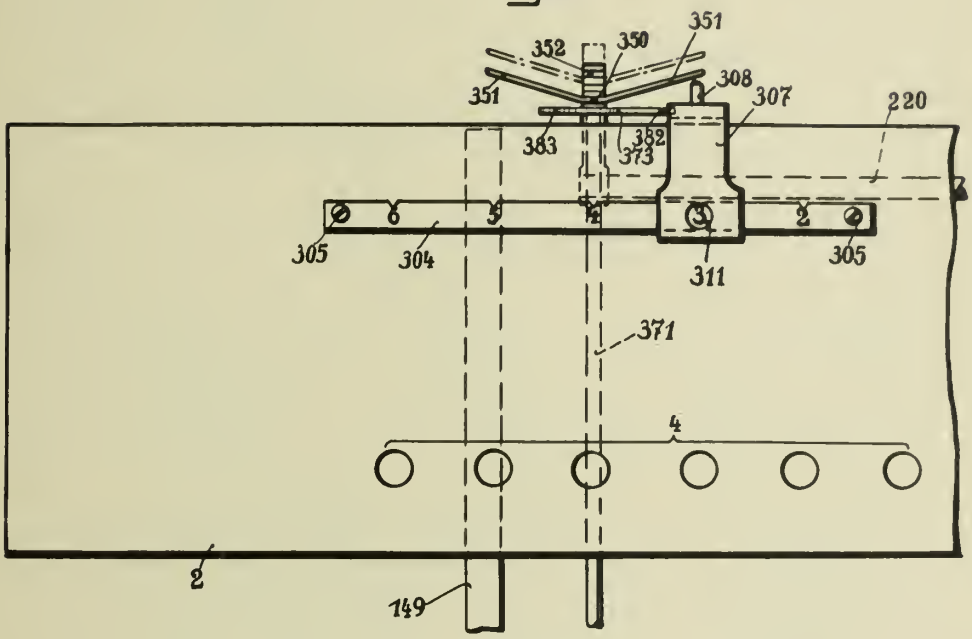

Fig. 6

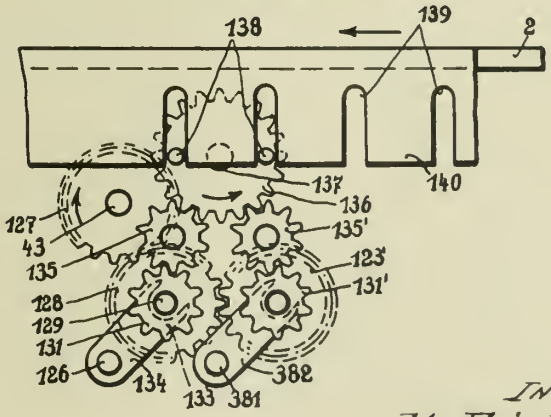

INVENTOR
U. Eichler
BY John C. Luck
ATTORNEY

PUBLISHED
MAY 25, 1943.
BY A. P. C.

U. EICHLER
CALCULATING MACHINE
Filed Aug. 2, 1939

Serial No.
288,057
5 Sheets-Sheet 5

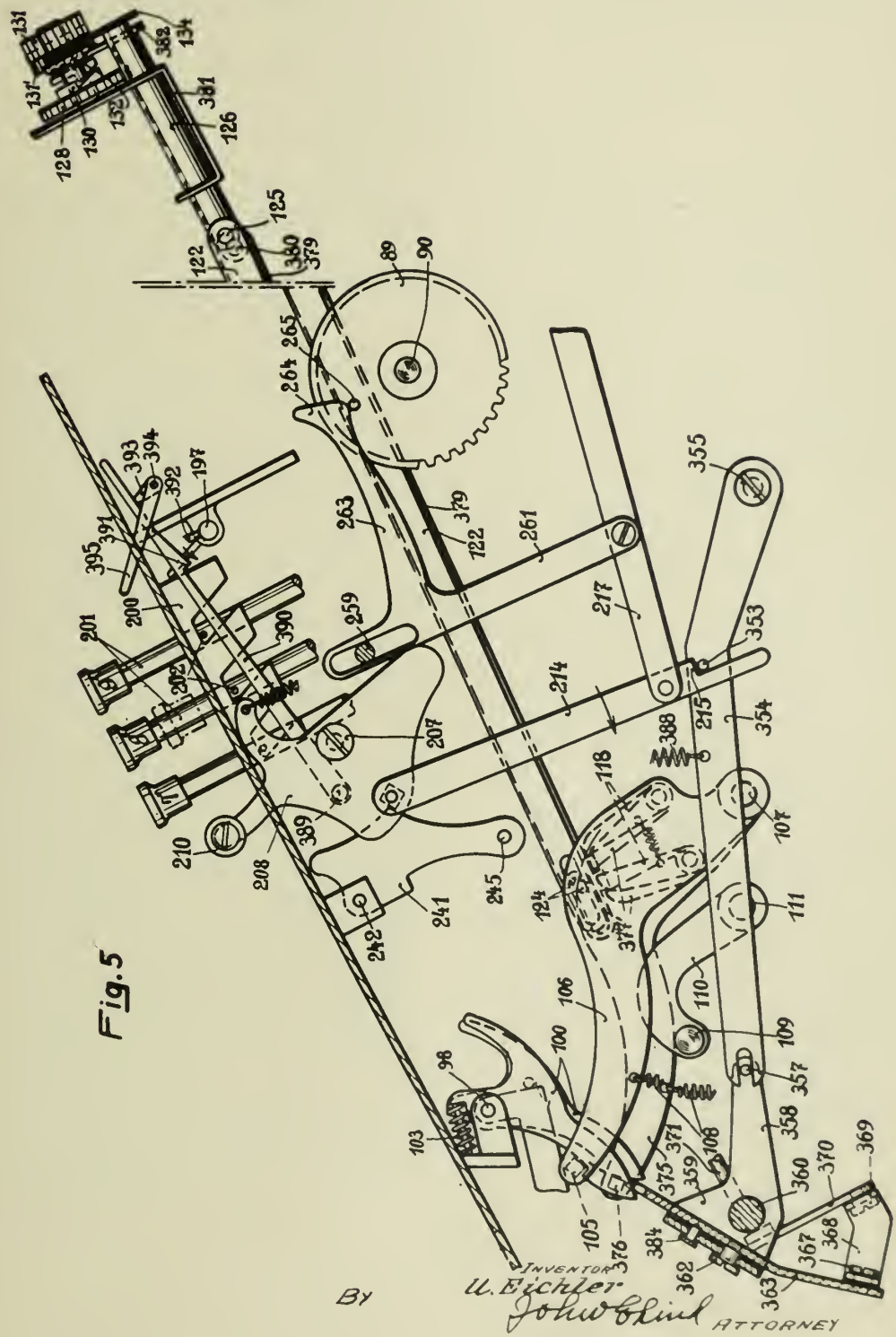

Fig. 5

INVENTOR
U. Eichler
BY John Blind ATTORNEY

Published May 25, 1943

Serial No. 288,461

ALIEN PROPERTY CUSTODIAN

RETRACTABLE LANDING GEAR FOR AIRCRAFT

Charles Raymond Waseige, Rueil, France; vested in the Alien Property Custodian

Application filed August 4, 1939

The present application forms a continuation-in-part application of the co-pending application Serial No. 226,569 filed August 24, 1938.

The invention relates to retractable landing gears for aircraft and more particularly to means for minimising the wear of the pneumatic tyres of the landing wheels.

The primary object of the invention is to set the wheel in rotation before it comes into contact with the ground, this being done to avoid deteriorating the pneumatic tyre on landing, particularly on hard surfaces, such as concrete tracks for example.

By way of non-limitative examples three different embodiments of the invention are diagrammatically illustrated in the annexed drawings in which:

Fig. 1 is a side view of a half landing gear in the position for landing;

Fig. 2 is a similar view of this same landing gear, but in the retracted position.

Fig. 3 is similar to Fig. 1 and shows a modified embodiment.

Fig. 4 shows a further modified embodiment.

In the exemplary embodiment shown in Figs. 1 and 2, there is provided a circular track 1 which is concentric with the stationary pin 2 of the pivot jaw 3 for the landing struts 4 and said track 1 is carried by the structure of the aeroplane in such a manner that during the lowering of the landing gear i. e. during rotation of the landing struts 4 about the stationary pivot pin 2 the tyre rolls on said track and rotates the wheel 6 in the same direction as it has to rotate in when the aeroplane is rolling along the ground. Furthermore, the rim of the wheel carries on each side a set of blades 7, the blades of which are so constructed that the relative wind keeps up and accelerates the rotary movement thus imparted to the wheel. Optionally, said sets of blades may be eliminated and the track may remain alone.

The track may be movable on the aeroplane and be so controlled that it only comes into contact with the tyre by the action of a device which is driven in synchronism with the landing gear lowering mechanism.

An embodiment thereof is illustrated in Fig. 3. In this embodiment the track 1*a* is pivoted to the aircraft structure at a stationary point 8 and it is connected by a link 9 to the control means 10 for the locking device of the landing gear, which device is schematically illustrated at 11. When the landing gear is locked in its retracted position, the track 1*a* is out of engagement with the landing wheel 6 but on the pilot actuating the control means 10 to unlock the landing gear and cause it to move to its landing position the link 9 urges the track 1*a* to rock about the pivot 8 into engagement with the wheel 6. Further a stationary hood 13 covers the front half of the crown of blades 7 when the landing wheel 6 is in the retracted position.

In the embodiment illustrated in Fig. 4 a gear wheel 15 is secured to the wheel 6 coaxially therewith; it is for instance keyed on the wheel axle. Said gear wheel 15 meshes with an internally toothed gear wheel portion 16 carried by that member 17 of the landing gear which is pivoted at 18 to the landing strut 4 and this gear wheel portion 16 is concentric to said pivot 18. It is clear that when the landing gear is being lowered, i. e. when the landing strut 4 turns about its pivot 2, the gear wheel 15 rolls as a planet wheel on the gear wheel or sun wheel portion 16, thereby rotating the landing wheel 6. Towards the end of the lowering stroke the gear wheel 15 gets disengaged from the gear wheel portion 16 owing to the fact that the gear wheel portion 16 is made shorter than the stroke of the gear wheel 15.

Of course, the invention is in no way limited to the details of construction illustrated or described which have only been given by way of example. Thus, for example, the invention may be applied to retractable landing gears of any system and whatever be their operating mechanism; it is obvious that the positon of the track for setting the wheel in motion varies according to the type of the landing gear, in particular according to whether the wheel is lowered from front to rear or from rear to front.

CHARLES RAYMOND WASEIGE.

PUBLISHED

MAY 25, 1943.

BY A. P. C.

C. R. WASEIGE

RETRACTABLE LANDING GEAR FOR AIRCRAFT

Filed Aug. 4, 1939

Serial No. 288,461

2 Sheets-Sheet 1

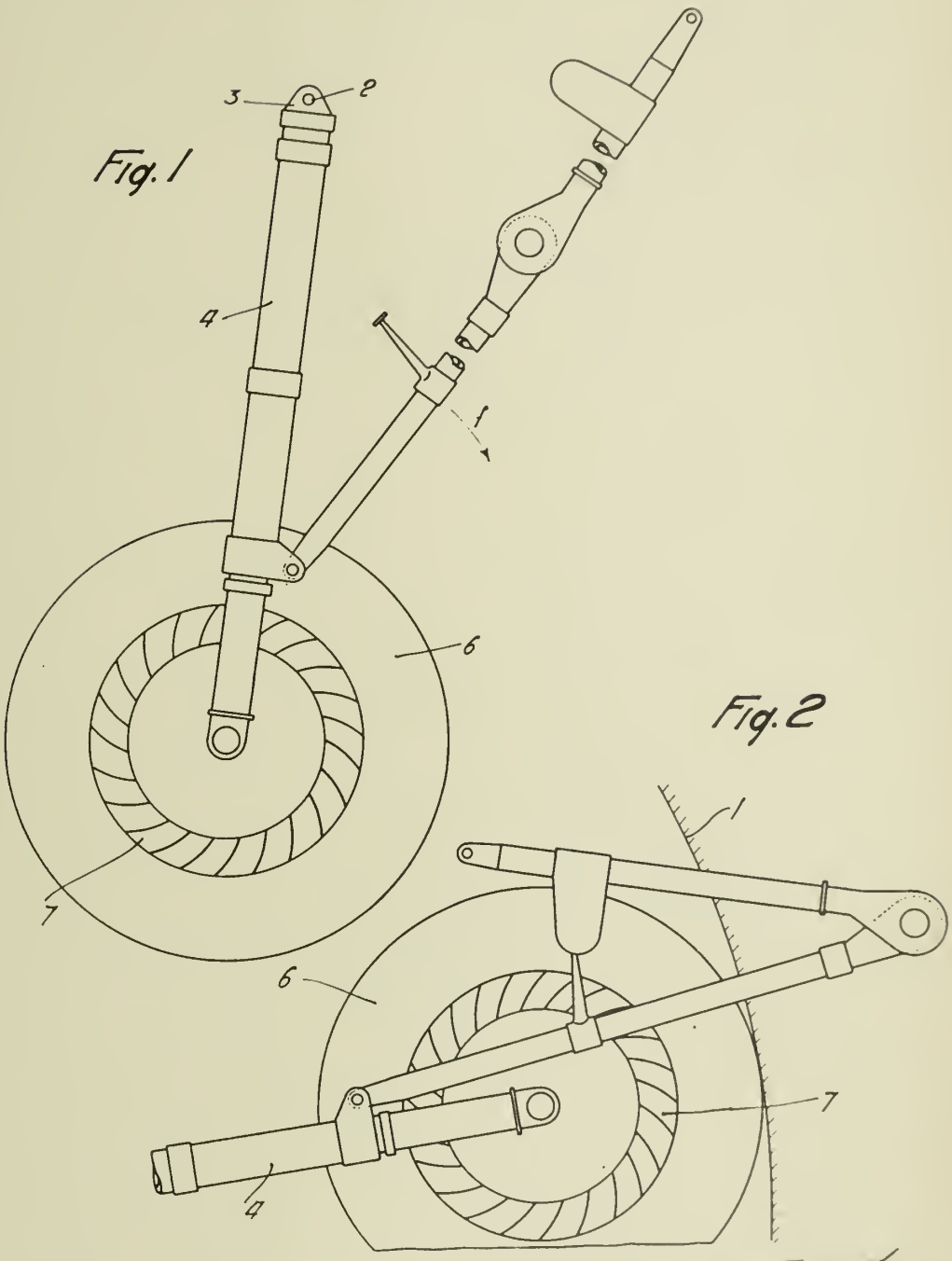

Inventor;
C. R. Waseige

By: Glascock Downing & Seebold
Atty's

PUBLISHED
MAY 25, 1943.
BY A. P. C.

C. R. WASEIGE
RETRACTABLE LANDING GEAR FOR AIRCRAFT
Filed Aug. 4, 1939

Serial No.
288,461
2 Sheets-Sheet 2

Fig. 3

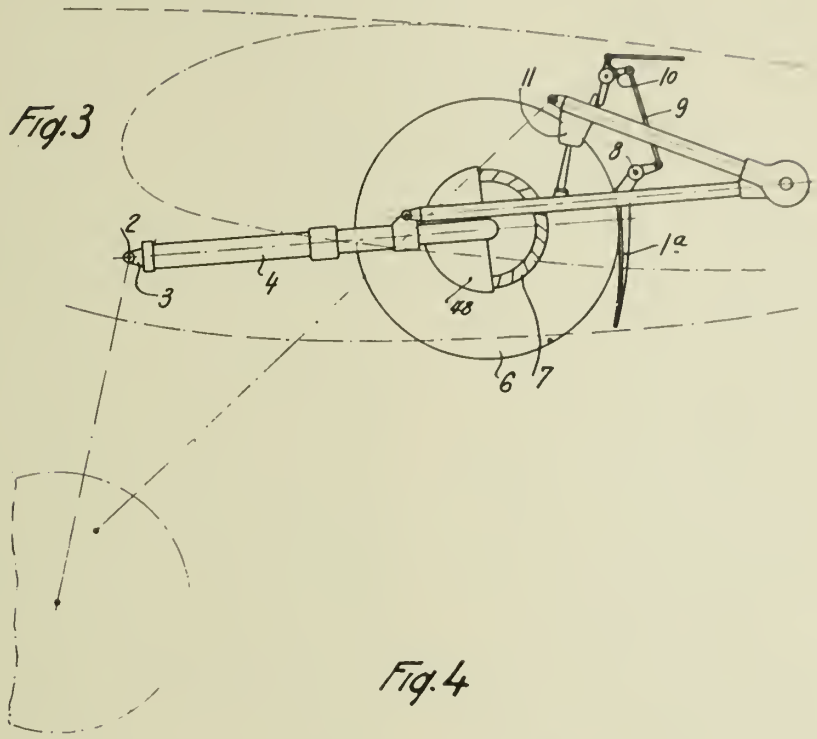

Fig. 4

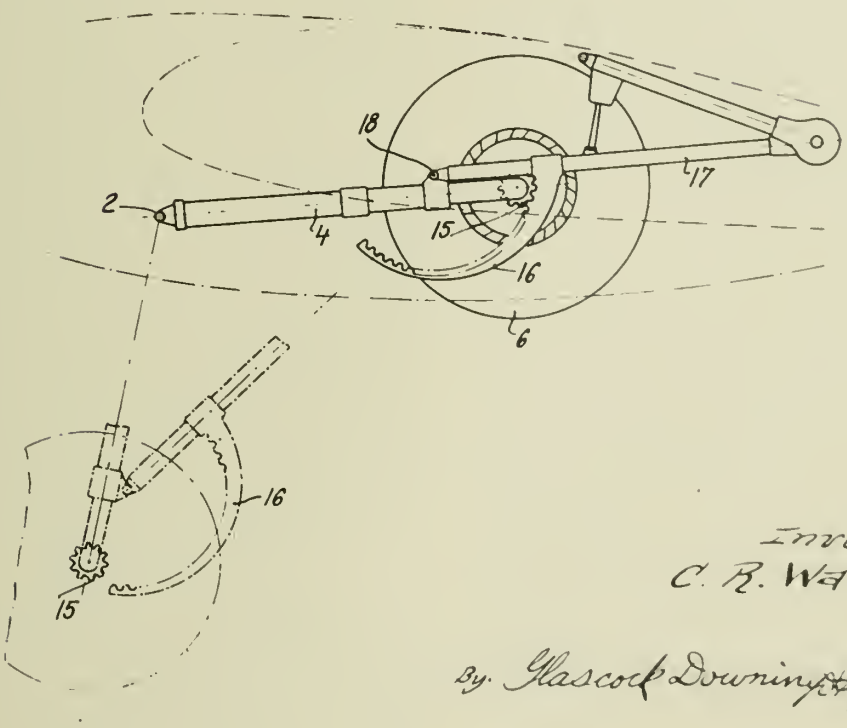

Inventor,
C. R. Waseige

By Glascock Downing & Seebold
Attys.

Published May 25, 1943

Serial No. 288,462

ALIEN PROPERTY CUSTODIAN

RETRACTABLE LANDING GEAR FOR AIRCRAFT

Charles Raymond Waseige, Rueil, France; vested in the Alien Property Custodian

Application filed August 4, 1939

My present application which is a division from my co-pending application Serial No. 226,569 relates to mechanisms for operating retractable landing gears for aircrafts.

By landing gear, is to be understood herein the assembly formed by any element which is intended to come into contact with the ground, such as a single wheel or a train of wheels, a ski, a float, its supporting frame and its shock-absorber or shock-absorbers, which will hereinafter be called landing shock-absorbers. It has already been proposed to provide the operating mechanisms in question with means which, during at least a part of the operation of the landing gear, tension a resilient element, for example by using for tensioning said resilient element the relative movement, during this part of the operation, of two parts of the supporting frame, the energy thus stored in said resilient element being restored by the latter during another part of the operation or the reverse operation in order to assist these latter.

The present invention has essentially consists in constituting said resilient element by the landing shock-absorber itself, which is preferably pneumatic or oleo-pneumatic, of the landing gear.

By thus using a pre-existing element for a novel function in addition to its usual function, instead of having recourse to a novel element, in addition to a substantial saving in weight, a considerable decrease in the bulk of the landing gear is obtained during the retraction and in its retracted position which is particularly advantageous for modern aeroplanes. On the other hand, the landing shock-absorbers are very reliable elements which are constructed to absorb considerable energy that is superabundant for the requirements of lowering the gear. Furthermore as they are provided with a device for braking their expansion, said shock-absorbers assist the lowering of the landing gear more gently than unbraked resilient members that require the addition of powerful shock-absorbers called lowering shock-absorbers.

In order to prevent this novel function of the landing shock-absorber from in any way impairing its usual action, a unidirectional kinematic connection is preferably provided between the lower movable part of the shock-absorber and one of the members of the supporting frame of said shock-absorber, between which member and the shock-absorber a relative movement occurs during the operating of the landing gear.

Owing to said way of providing said unilateral connection, it is advantageous to provide the landing gear wtih an independent lowering shock-absorber which may be of the type described in my patent 2,148,972, and the power of which is less than for the usual landing gears.

In order that said power required by the lowering shock-absorber be reduced to a minimum, and this is an important characteristic feature of the invention, the aforesaid landing shock-absorber, which is preferably pneumatic or oleo-pneumatic, is advantageously arranged in such a manner that the braking which it produces during the expansion will greatly increase at the end of the stroke of said expansion. This braking may be obtained hydraulically by known means such as small orifices, or by throttling liquid passageways.

In an advantageous embodiment of my invention, said kinematic connection is obtained by means of a substantially inextensible bond having three bearing points, at least one of which is formed by a loose pulley, and which are respectively distributed over three members viz.: the two parts of the shock-absorber which are movable relatively to each other and the said member of the supporting frame, at least one of said bearing points being movable relatively to the member which supports it and being urged by a spring in such a manner as to keep said bond always taut in whatever position it may be.

By way of non limitative examples, various embodiments of my invention applied to the same type of landing gear have been shown in the accompanying drawing.

In said drawing, Figs. 1 to 3 are diagrammatical side elevations of the landing gear.

In the three exemplary embodiments shown, the landing gear of a known type comprises two oleo-pneumatic landing shock-absorbers 1 disposed in parallel relationship to each other on each side of a wheel 2 carried thereby, cross-braced together and pivoted at their end to a stationary stud 3. On the movable lower part of each shock-absorber 1 is pivoted at 4 one of the arms 6 of a folding strut the other arm 7 of which is pivoted to a stationary stud 8. When the folding strut 6, 7 is extended, the landing gear is in its landing position illustrated in full lines. When the folding strut is being folded the landing gear gets retracted and comes to the position shown in dot-and-dash lines.

The extension and the folding of the folding strut are produced by any known means, herein shown as a driving joint 9 of the type described in my patent 2,148,972.

In the exemplary embodiment of my invention shown in Fig. 1, each bar **6** of the folding strut carries a loose pulley **11** over which passes a flexible bond **12**, a chain or a cable, which is connected on the one hand to the lower movable part of the corresponding shock-absorber **1**, preferably by means of a tightener **13**, and on the other hand to a connecting rod **14** which is pivoted at **15** on the upper part of the shock-absorber and is constantly urged to rotate by a spring **16**.

The operation of this device is as follows:

During its movement when the aeroplane comes into contact with the ground, or while it is rolling along the ground, and the shock-absorber **1** shortens under an impact, the lower point of connection of the bond **12** moves towards the pulley **11** but said bond **12** remains taut owing to the fact that the spring **16** causes the connecting rod **14** to rotate on its pin **15** and pulls the whole of the bond upwards; this movement of the bond **12** as a whole has the sole effect of rotating the loose pulley **11**. When the shock-absorber expands, it causes the bond **12** to move back downwards and to thereby rotate the connecting rod **14** against the action of the spring **15**.

On closing of the folding strut **6**, **7** to retract the landing gear, a relative movement of the lower arm **6** of the folding strut and of the shock-absorber **1** occurs, said arm **6** tending to move away from the shock-absorber. Thus causes the pulley **11** to bear on the bond and compels it to bend, moving its two points of connection towards each other therefore tensioning the shock-absorber **1**. It can be readily seen that during the retracting, an instant occurs from which the arm **6** tends to move towards the shock-absorber **1** so that said shock-absorber partially expands and pulls the bond **12** which then presses against the pulley **11** and so helps to complete the retraction of the landing gear. When the landing gear is being lowered, the previous operation is repeated in the reverse direction; the shock-absorber begins to brake the lowering by tensioning itself to the extent it had been tensioned during the retracting, then expands thereafter, thereby helping the end of the lowering.

In the exemplary embodiment of Fig. 2, the loose pulley **11'** is carried by the connect **14'** instead of being fixed on the lower a the folding strut, as in the example of Fig the bond **12'** is attached to said arm at passing over the pulley **11'** instead of bein to the connecting rod **14'**. The operatior solutely similar to that of the device of but it will be observed that the pull of th on the movable lower part of the shock-a is effected along directions which deviat less from a line parallel with the axis shock-absorber than in the case of Fig. the other hand, it can easily be seen that ing to the position of the connecting poi the bond on the lower arm **6** of the foldin the movement of the movable part of the absorber during the retracting or the l will or will not have a dead centre which its total travel into two successive sectio resisting and the other driving.

In the exemplary embodiment of Fig. 3, rod **17** is pivoted on the movable part shock-absorber and extends parallel w axis of the latter; its upper end passe through a guiding sleeve **18** which is ca a finger **19** in such a manner that it ca about a horizontal axis. Said finger **19** an extension **20** which is in contact with face of the lower arm **6** of the folding str beyond said sleeve, an abutment **21** is f said rod **17**. When the shock-absorber o under the impact during the landing o the aeroplane is rolling along the ground, **17** slides freely in the sleeve **18** and th operation of the shock-absorber is in modified. When the folding strut **6**, **7** c retract the landing gear, the finger **19** w displaced by its extension **20** participate relative rotary movement which occurs the arm **6** and the shock-absorber **2** an on the abutment **21**, thereby causing the part of the shock-absorber to slide by m the rod **17** and tensioning the shock-a In this case again, the travel of the moval of the shock-absorber during the retracti the lowering of the landing gear may not have a dead centre, a fact which on the position of the finger **19**.

CHARLES RAYMOND WASE

PUBLISHED
MAY 25, 1943.
BY A. P. C.

C. R. WASEIGE
RETRACTABLE LANDING GEAR FOR AIRCRAFT
Filed Aug. 4, 1939

Serial No.
288,462

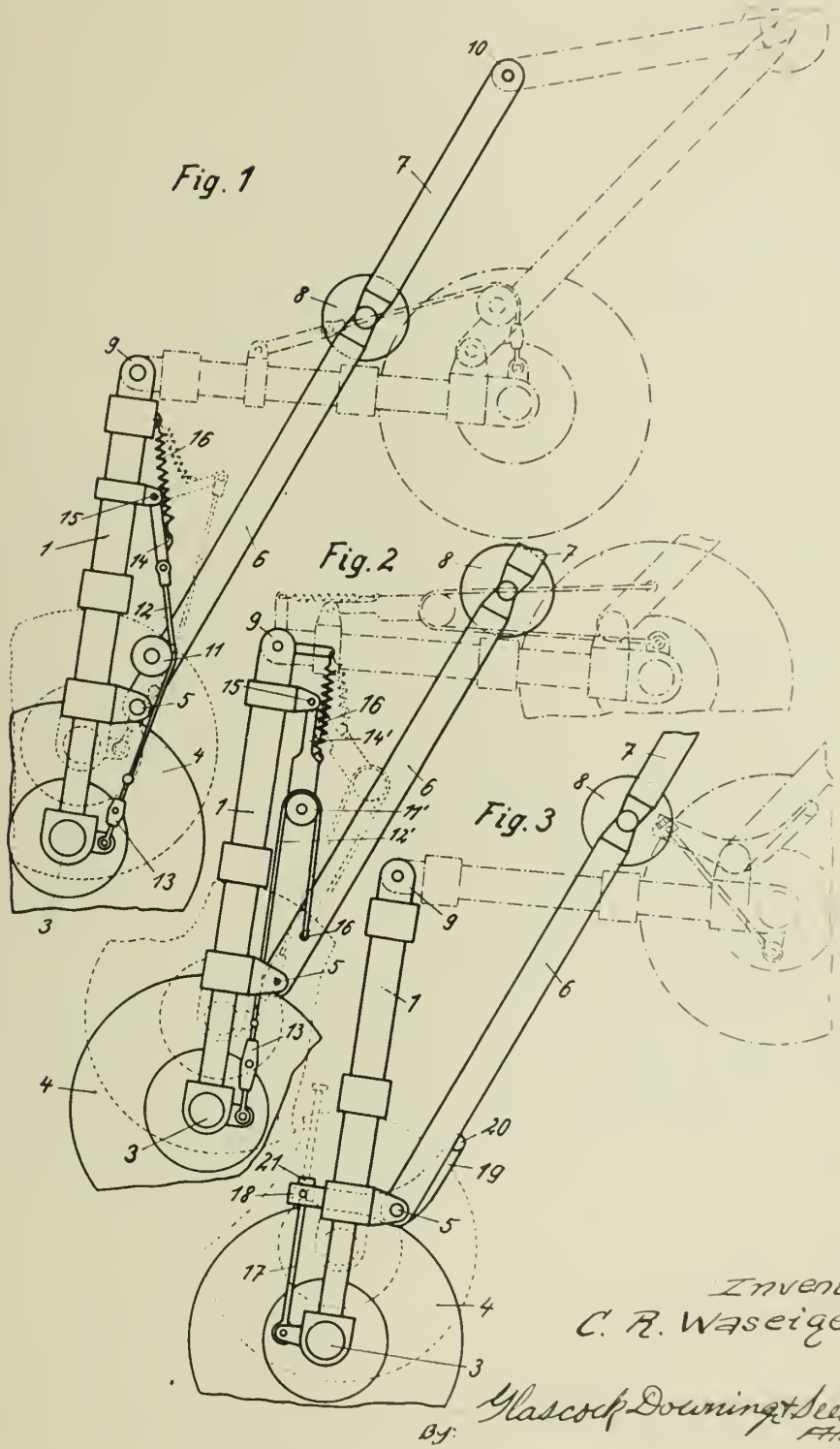

Inventor,
C. R. Waseige
By: Glascock Downing & Seebold
Attys

Published May 25, 1943

Serial No. 288,964

ALIEN PROPERTY CUSTODIAN

DISPLACING DEVICE FOR THE NUMERAL WHEEL CARRIAGE IN A ROTARY CALCULATING MACHINE

Torajiro Ohmoto, Higashiyodogawaku, Osaka, Japan; vested in the Alien Property Custodian

Application filed August 8, 1939

The present invention relates to a displacing device for the numeral wheel carriage in a rotary calculating machine equipped with the mechanism shown in the United States Letters Patent No. 2,087,701.

An object of the invention is to provide means for displacing the numeral wheel by a figure or by any number of figures in either direction in respect to the calculating wheels. Another object of the invention is to provide a device for further slightly shifting the numeral wheels to the left in its extreme left position.

In the accompanying drawings

Fig. 1 is a plan of a calculating machine provided with the device according to the present invention,

Fig. 2 is the plan showing the carriage slightly shifted to the left,

Fig. 3 is a longitudinal elevation on the line III—III of Fig. 4.

Fig. 4 is an underside view of the device of the invention,

Fig. 5 is an underside plan of the device showing the carriage displaced by the figure.

Fig. 6 is a section on the line VI—VI of Fig. 5,

Fig. 7 is an underside plan showing the knob moved to the right,

Fig. 8 is an underside plan showing the rocking plate removed,

Fig. 9 is an underside plan of Fig. 2 showing the device for slight displacement in operation,

Fig. 10 is an underside plan of Fig. 1 showing part of the device for slight displacement removed,

Fig. 11 is a longitudinal side elevation on the line IX—IX of Fig. 12 showing the frame only, and

Fig. 12 is a plan of Fig. 11.

According to the invention the carriage is secured against accidental displacement, as it is held in position by the projection of a slide which is in mesh with a rack and thus cannot shift unless said projection is disengaged by means of a rocking plate, so that any calculation can be quickly and accurately worked. Further, the device is simple in construction and as is all disposed on the underside of the carriage, it is easy to manufacture and to repair.

The invention is further characterised in that the numeral wheel carriage slidably mounted on the frame is displaceable in either direction by moving or first pushing back and moving a rocking plate equipped in said carriage, which is further slightly displaceable to the left in the extreme left position by said rocking plate controlled by an oscillating rod so as to bring the numeral wheel gears into mesh with the intermediate gears, so that on zeroizing the numeral wheel the figures registered thereon are transferred to the calculating wheels.

TORAJIRO OHMOTO.

PUBLISHED

MAY 25, 1943.

BY A. P. C.

T. OHMOTO

DISPLACING DEVICE FOR THE NUMERAL WHEEL CARRIAGE IN A ROTARY CALCULATING MACHINE

Filed Aug. 8, 1939

Serial No. 288,964

5 Sheets-Sheet 1

Fig. 1.

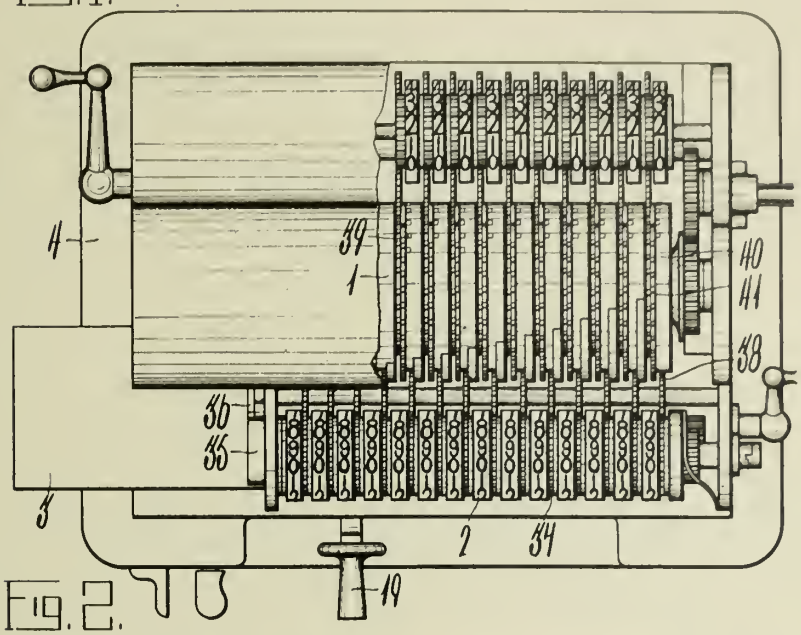

Fig. 2.

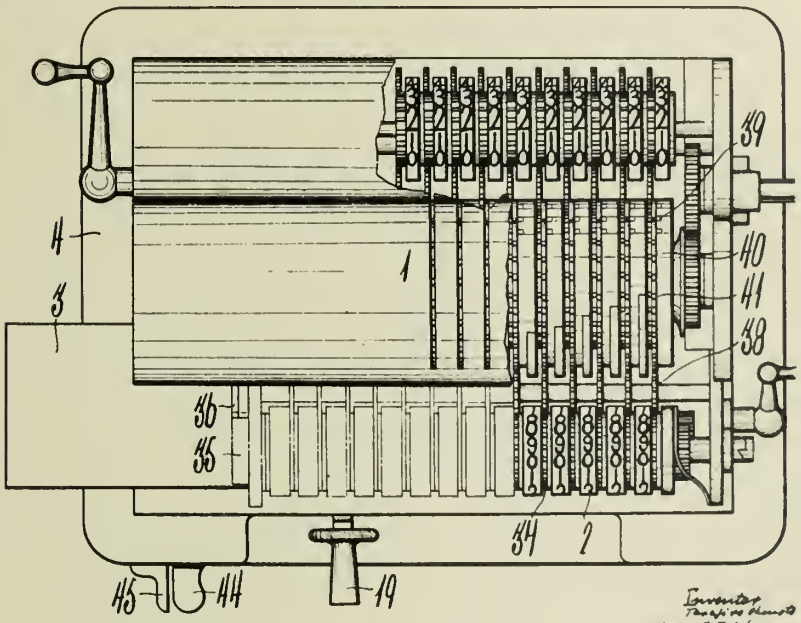

Inventor
Tsuyoshi Ohmoto
per J. McLaughlin
Attorney

PUBLISHED

MAY 25, 1943.

BY A. P. C.

T. OHMOTO

DISPLACING DEVICE FOR THE NUMERAL WHEEL CARRIAGE IN A ROTARY CALCULATING MACHINE

Filed Aug. 8, 1939

Serial No. 288,964

5 Sheets-Sheet 2

Fig. 3.

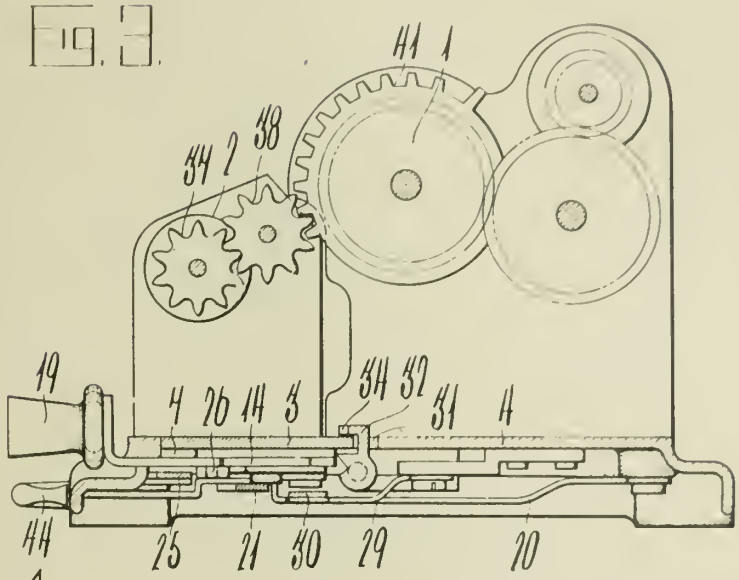

Fig. 4.

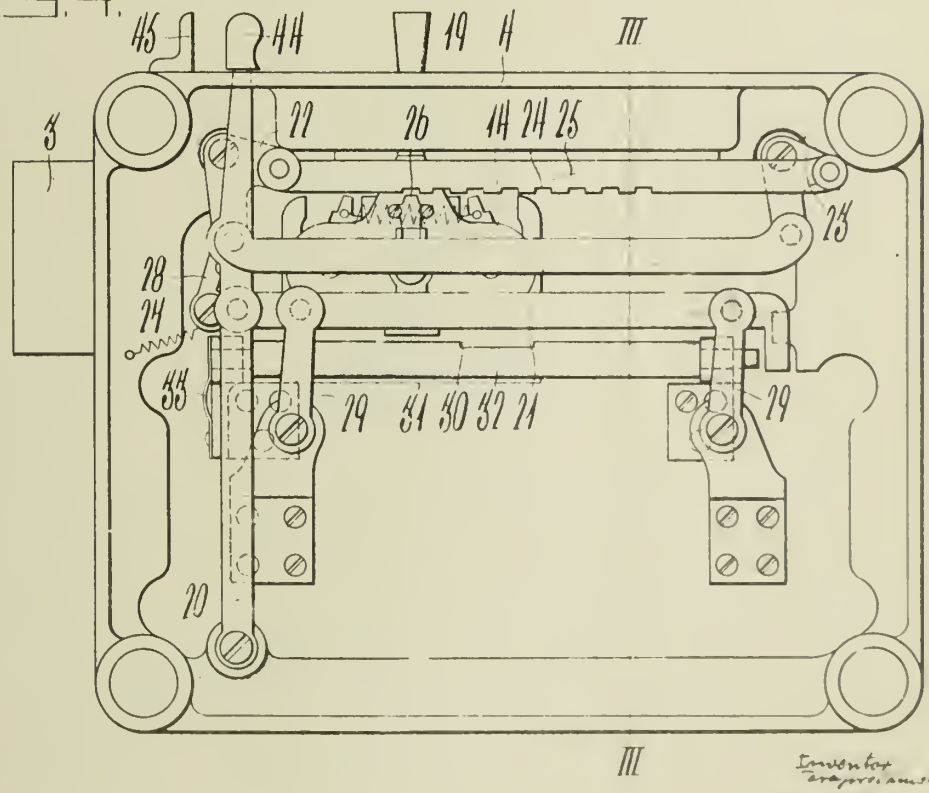

Inventor
Tokujiro Ohmoto

PUBLISHED

MAY 25, 1943.

BY A. P. C.

T. OHMOTO

DISPLACING DEVICE FOR THE NUMERAL WHEEL CARRIAGE IN A ROTARY CALCULATING MACHINE

Filed Aug. 8, 1939

Serial No. 288,964

5 Sheets-Sheet 3

Fig. 5.

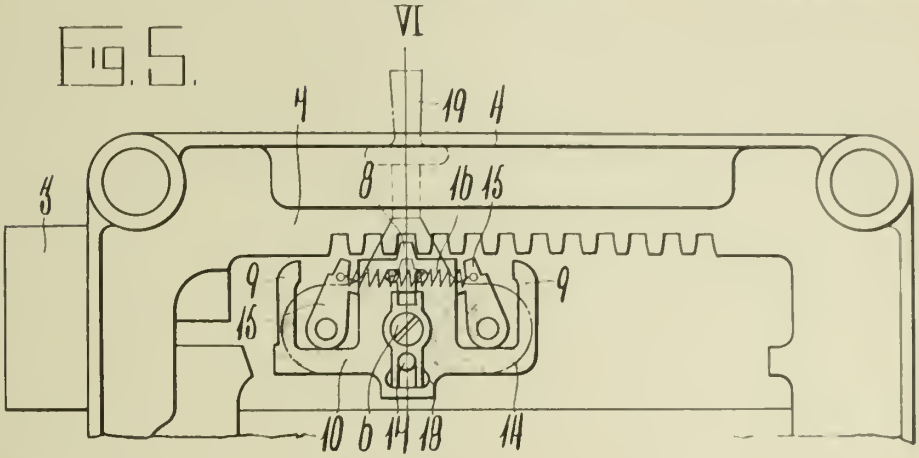

Fig. 6.

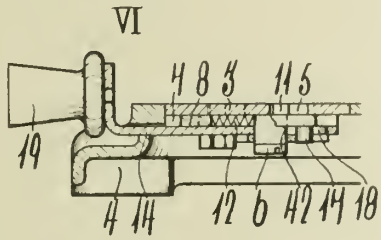

Fig. 7.

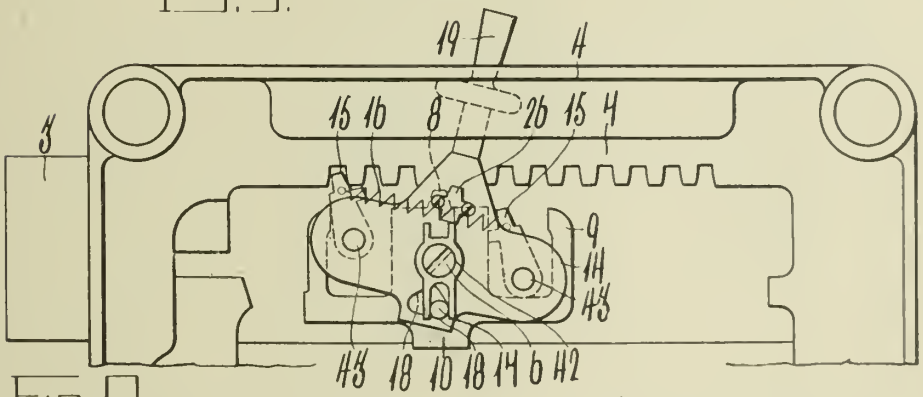

Fig. 8

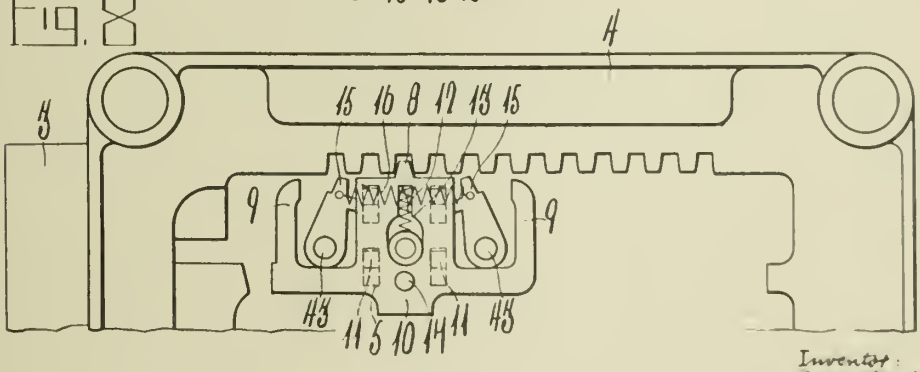

Inventor:
[illegible]
per [illegible]
Attorney

PUBLISHED

MAY 25, 1943.

BY A. P. C.

T. OHMOTO

DISPLACING DEVICE FOR THE NUMERAL WHEEL CARRIAGE IN A ROTARY CALCULATING MACHINE

Filed Aug. 8, 1939

Serial No. 288,964

5 Sheets-Sheet 4

Fig. 9.

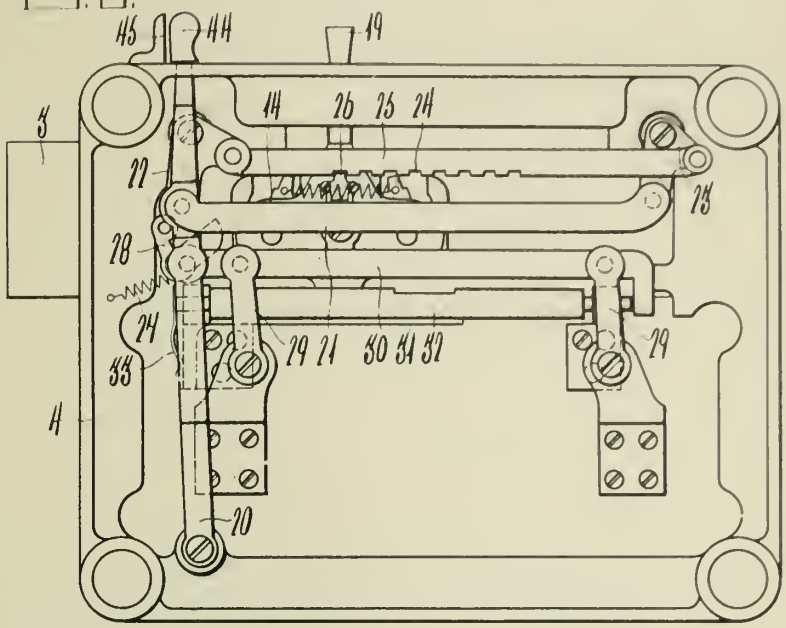

Fig. 10.

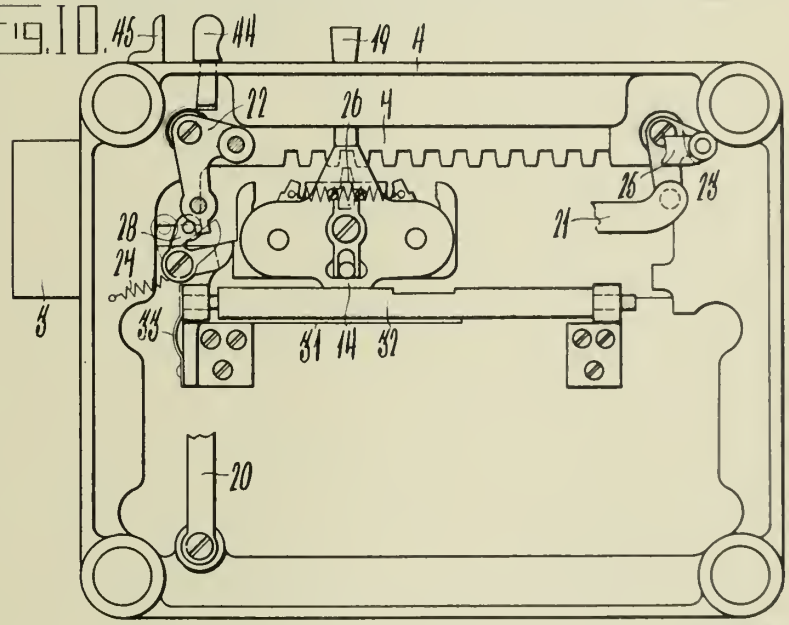

Inventor:
Thomas Ohmoto
per J. Feldman
Attorney

PUBLISHED

MAY 25, 1943.

BY A. P. C.

T. OHMOTO

DISPLACING DEVICE FOR THE NUMERAL WHEEL CARRIAGE IN A ROTARY CALCULATING MACHINE

Filed Aug. 8, 1939

Serial No. 288,964

5 Sheets-Sheet 5

Fig. 11.

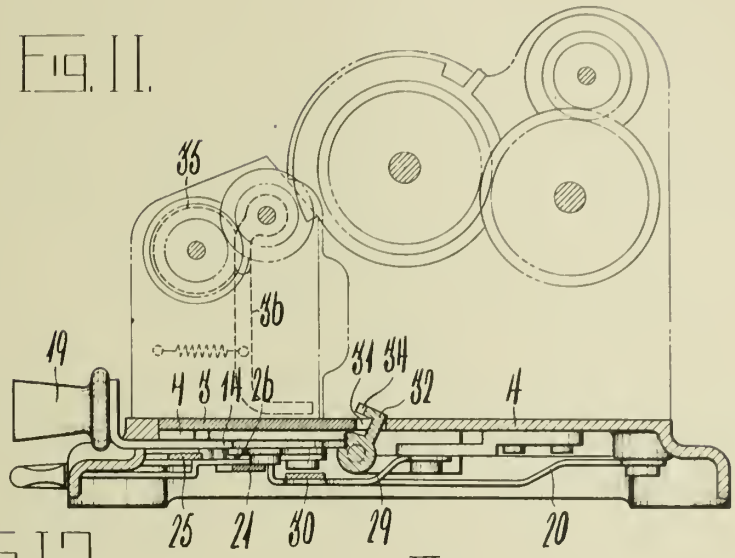

Fig. 12.

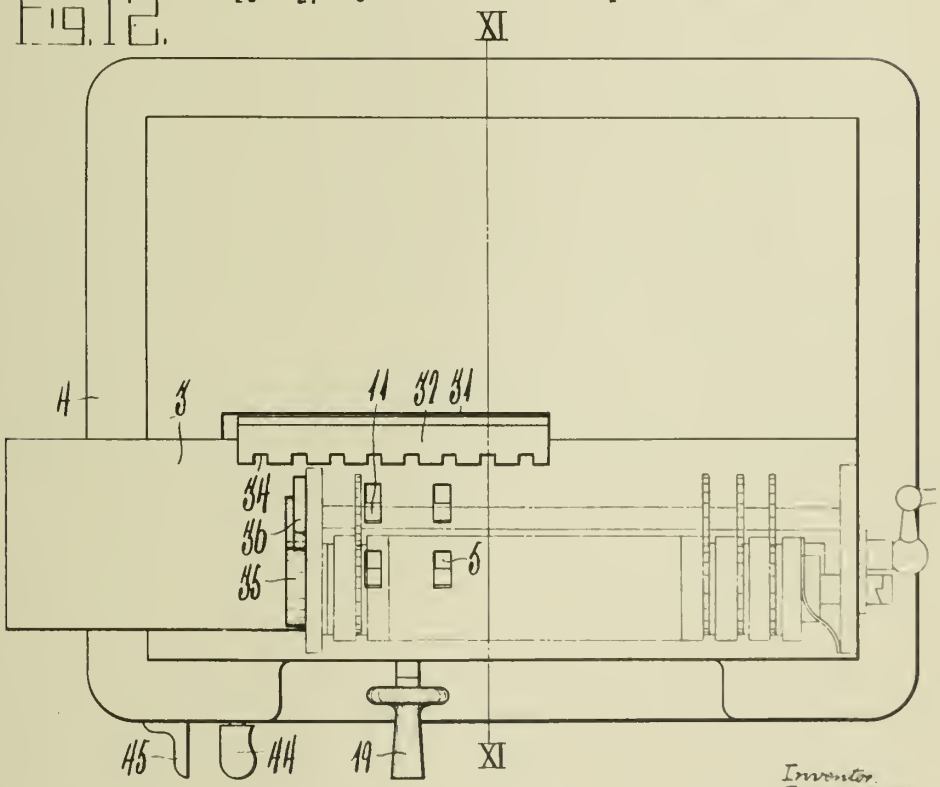

Inventor
Tarayo Ohmoto
per J. Freeman
Attorney

Published May 25, 1943

Serial No. 288,965

ALIEN PROPERTY CUSTODIAN

TRANSFERRING DEVICE FOR THE FIGURES IN A CALCULATING MACHINE

Torajiro Ohmoto, Higashiyodogawaku, Osaka, Japan; vested in the Alien Property Custodian

Application filed August 8, 1939

The present invention relates to a transmitting device for figures in a rotary calculating machine provided with the mechanism shown in the United States Letters Patent No. 2,087,701 and particularly in that type of rotary calculating machine in which figures introduced into the calculating wheels are on rotation transferred to the check wheels and the product is registered on the numeral wheels mounted in a carriage displaceable longitudinally into registry with said calculating wheels.

The object of the invention is to provide means for transferring the figures registered on the numeral wheels to the calculating wheels which are operable only on zeroization of the latter. As the transference is only possible when the calculating wheels have been reset to zero accidental damage of mechanism is wholly avoided, so that any calculation may be quickly and accurately worked.

In accompanying drawings:—

Fig. 1 is a plan of a rotary calculating machine provided with the transferring device according to the invention,

Fig. 2 is a plan showing the numeral wheel carriage slightly displaced to the left,

Fig. 3 is an underside view of Fig. 1,

Fig. 4 is an underside view of Fig. 2,

Fig. 5 is a longitudinal sectional side elevation on the line V—V of Fig. 3,

Fig. 6 is a longitudinal sectional side elevation on the line VI—VI of Fig. 4,

Fig. 7 is an enlarged back view of a portion of the device, and

Fig. 8 is a longitudinal sectional side elevation of same.

In the transferring device according to the invention the calculating wheels are each provided on its side with a segment gear engaging with an associating intermediate gear carrying a segment ring. On resetting the calculating wheels to zero said segment ring is caused to assume a position ready to be engaged by a pawl controlled by an oscillating rod and the numeral wheels in the extreme left position are brought into mesh with the calculating wheels only when they are further slightly displaced to the left and said pawl is caused to engage said segment ring by said oscillating rod, whereupon on zeroizing the numeral wheels the figures registered thereon are transferred to the calculating wheels.

TORAJIRO OHMOTO.

PUBLISHED

MAY 25, 1943

BY A. P. C.

T. OHMOTO

TRANSFERRING DEVICE FOR THE FIGURES IN A CALCULATING MACHINE

Filed Aug. 8, 1939

Serial No. 288,965

4 Sheets-Sheet 1

Fig. 1.

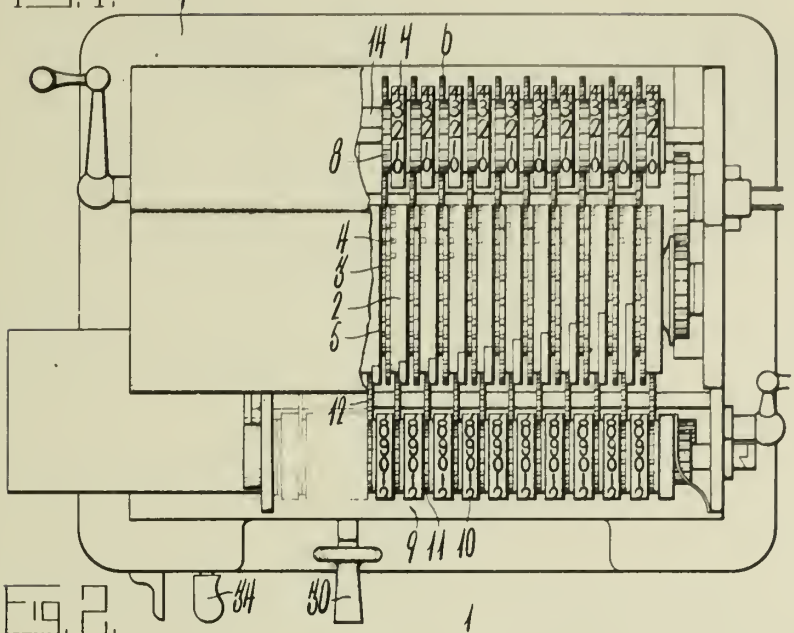

Fig. 2.

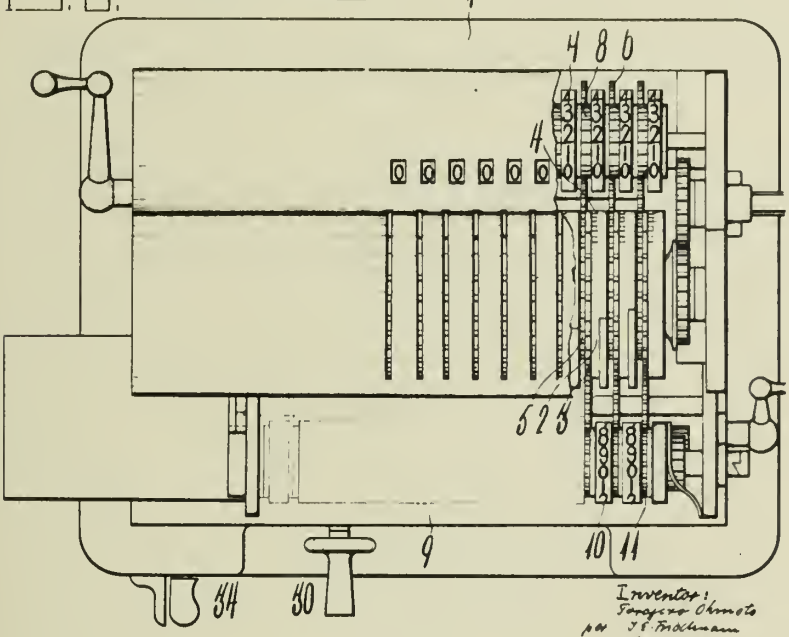

Inventor:
Tokyero Ohmoto
per J. E. Fickmann
Attorney

PUBLISHED

MAY 25, 1943.

BY A. P. C.

T. OHMOTO

TRANSFERRING DEVICE FOR THE FIGURES IN A CALCULATING MACHINE

Filed Aug. 8, 1939

Serial No. 288,965

4 Sheets-Sheet 2

Fig. 3.

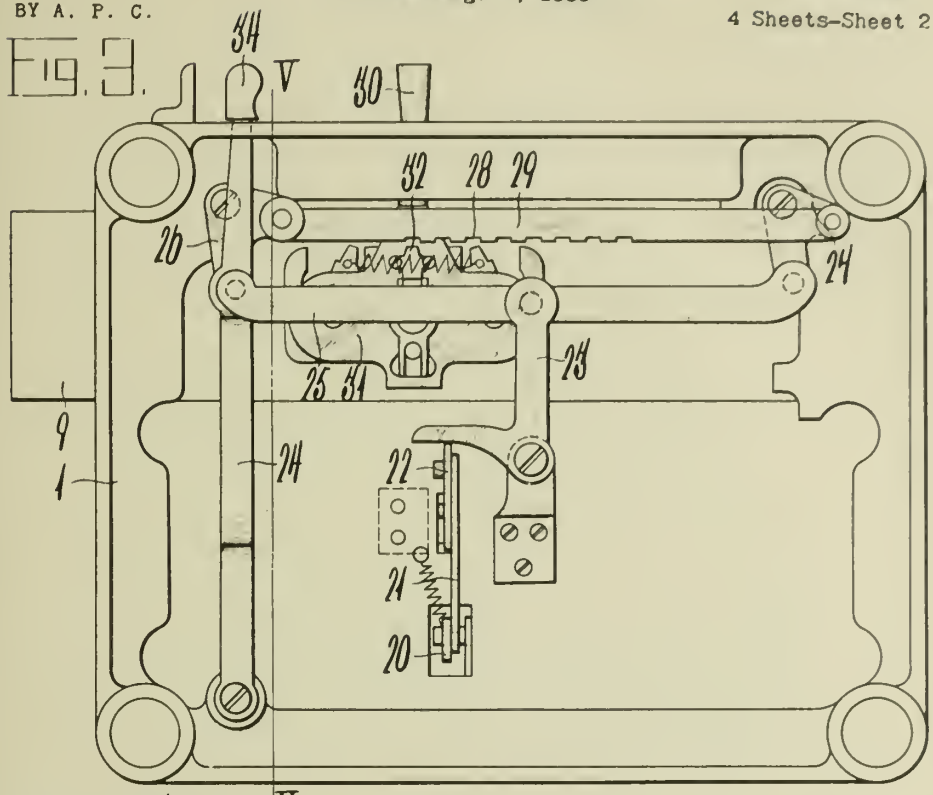

Fig. 4.

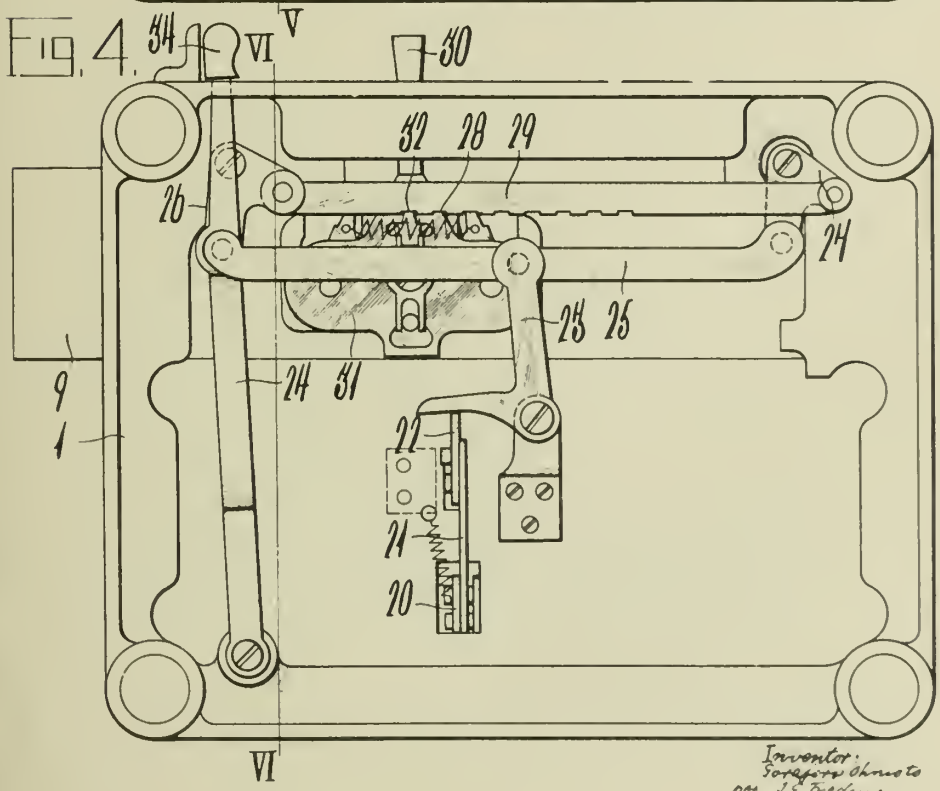

Inventor:
Sotaro Ohmoto
per T. G. Medeiros
Attorney

PUBLISHED

MAY 25, 1943

BY A. P. C.

T. OHMOTO

TRANSFERRING DEVICE FOR THE FIGURES IN A CALCULATING MACHINE

Filed Aug. 8, 1939

Serial No. 288,965

4 Sheets-Sheet 3

Fig. 5.

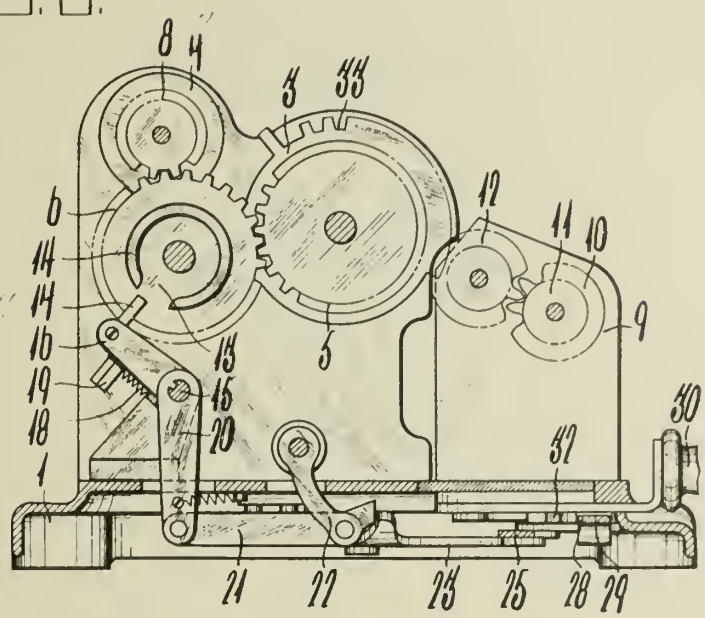

Fig. 6.

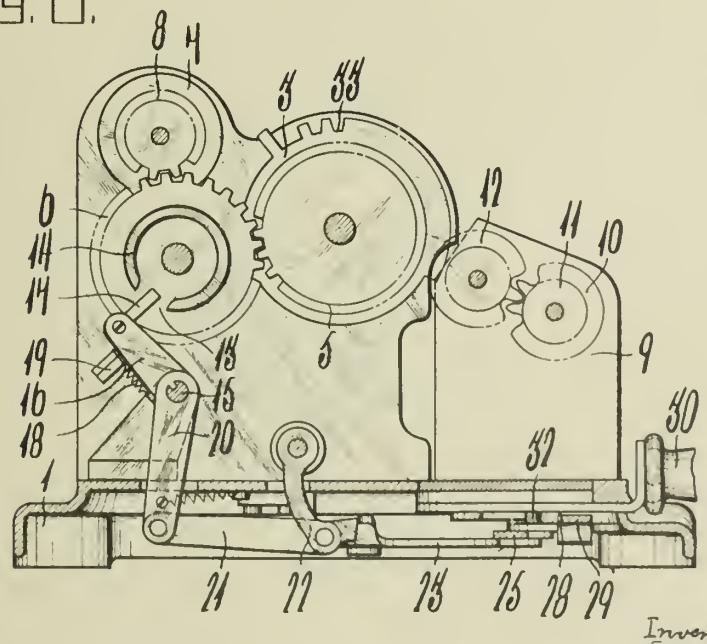

Inventor:
Tokujiro Ohmoto
per J. P. Friedman
Attorney

PUBLISHED

MAY 25, 1943

BY A. P. C.

T. OHMOTO

TRANSFERRING DEVICE FOR THE FIGURES IN A CALCULATING MACHINE

Filed Aug. 8, 1939

Serial No. 288,965

4 Sheets-Sheet 4

Fig. 7.

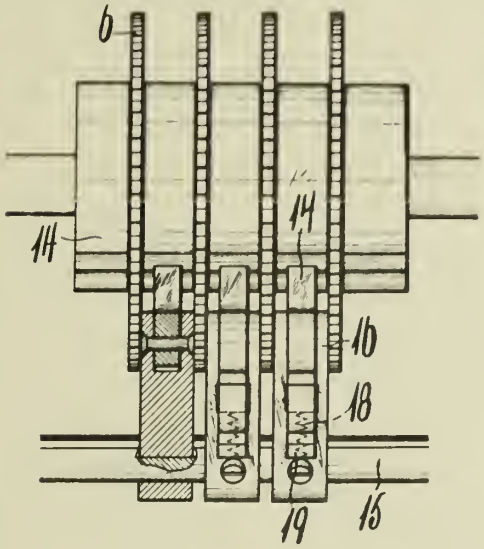

Fig. 8.

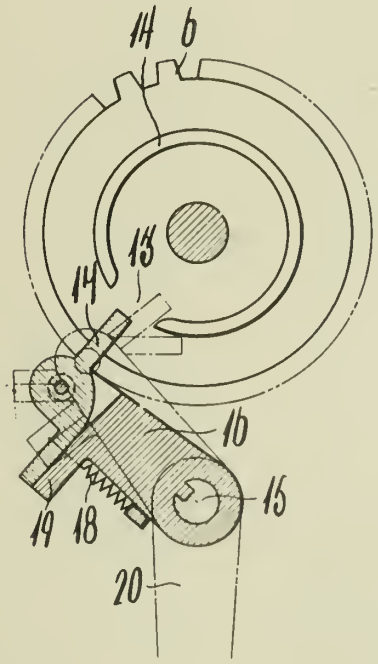

Inventor
Torayo Ohmoto
per J. T. Friedmann
Attorney

Published May 25, 1943

Serial No. 290,346

ALIEN PROPERTY CUSTODIAN

MANUFACTURE OF CENTRIFUGAL FANS

Ferdinando Ferré, Milan, Italy; vested in the Alien Property Custodian

Application filed August 16, 1939

Centrifugal fans are generally built with a cast rotor or with a metal sheet rotor associated or not with forged or cast parts.

Fans with cast rotors can only be used in such cases in which the speed of rotation is limited, inasmuch as the centrifugal stresses, due to the weight of the cast elements, exceed rapidly the limits of resistance of the material, said rotors being also difficult to be balanced at high speeds.

The sheet fans, with or without forged or cast parts, which generally are reduced to the hub or to a spider (hub with arms), have the various members connected by rivets or with a electric spot welding. The connecting members, or the welds or rivets, cause in the rotor, unbalances which can be removed only by difficult balancing operations.

When rivets are used, the temperature of operation of the fan should have a limit inasmuch as said method of assembly may loosen so that it cannot be adopted as soon as the operating temperature rises appreciably above the usual temperature.

Welds alter very often the nature of the material and increase its brittleness when they have not undergone a proper heat treatment, which is not always possible, due to the warpings it causes.

The applications of centrifugal fans is nowadays extending to always higher operating temperatures, both for forced circulation plants for hot air for various industrial purposes as for heat treatments in which the uniformity of temperature has a particular importance. In fact only with a strong circulation of air it is possible to secure the absolute uniformity of temperature in the chamber of a furnace or of an oven, and this not merely for relatively low temperatures (under 600° C.) in which the heat convection is the greatest, but also for higher temperatures in which the radiation of heat is most important. This because the charges of the materials are very often made in compact bulks and only some of the superficial layers get under the direct action of the radiating heat.

With increased operating temperatures the problem of the construction of the fan is obviously more and more complicated, and to much the more that the resistance of the material decreases.

Having particularly in view the applications to working temperatures above normal, but without limiting the same to the exclusion of usual ventilators, a method of manufacture has been developed, forming the object of the present invention, which removes the drawbacks stated above.

The invention refers to the manufacture of the fan of centrifugal ventilators with pressed parts and with elements in sheet metal or machined from forgings or castings, assembled one to another without welds or rivets, but simply by jointing and fitting in the various parts. This method of construction, besides being extremely simple, allows immediately a very satisfactory balancing of the fan without requiring any special fitting, because the various parts composing the fan are naturally arranged symmetrically with regard to the centre line: such parts being obtained either from dies or with machining operations, with perfectly equal and constant weights.

In the attached drawing are shown the designs adopted both for a fan with a single lateral inlet and for a fan with two axial inlets, without limiting the features of the invention by this particular design:

Fig. 1 shows the general view of a fan with a single suction inlet.

Fig. 2 shows a fan with two inlets, similar in other features to the first.

Fig. 3 shows a front view and a section of the disc on which the fan blades are mounted.

Fig. 4 shows the hub.

Fig. 5 shows in front and side view a fan blade for a single inlet.

Fig. 6 shows in the same way a fan blade for a double axial inlet.

The rotor is formed by a supporting disc in sheet metal *a* (Fig. 1), *a'* (Fig. 2), with a central hole and a series of upset extensions as shown in the figure, which surround the parts *b* applied upon shaft *c* of the fan as will be disclosed hereafter. On said disc *a*, in the manufacture of a fan with a single inlet, are cut the slots *d* (as shown on the left-hand side of Fig. 3) one or more per blade in number. Blades *e* are made in sheet metal (as shown in Fig. 5) and from said sheet are cut-out hooks *f* which enter in the above said slots *d*.

The portion of the blade adjacent to the shaft is upset in *b* so as to follow for a short angle the surface of said shaft.

When the different blades *e* (Fig. 5) are fitted and set into the disc *a*, the hub *h* is shifted in axially, said hub being formed by a cylinder with a central hole of the size of the shaft increased by the double thickness of the plate of the blades and provided also with a series of longitudinal slots *i* wherein enters the foot of each blade. Said slots of course, extend only for a part of

the whole length of the hub, so that the remaining part, extending out of the set of blades, is the resisting portion of the hub.

The three members (disc, blades and hub) are then fitted on the shaft *c* of the fan, (which shaft may have a conical part) and then screwed tight thereon by means of a nut.

In the construction of fans with a double air-inlet, the disc is in the centre and has radial slots *e* starting from the centre and extending outwards towards the rim of said disc. The blades *m* (Fig. 6) which are of course, sy cally arranged around the axis, have at t end a short slot *p* inserting in the po portion of the disc and at the inner end foot *b* similar to the one of the fan with inlet. To keep together said blades t two half-hubs *k* which are connected by means of two set-rings, screwed on t of the fan (see Fig. 2).

FERDINANDO F

PUBLISHED
MAY 25, 1943.
BY A. P. C.

F. FERRÉ
MANUFACTURE OF CENTRIFUGAL FANS
Filed Aug. 16, 1939

Serial No.
290,346

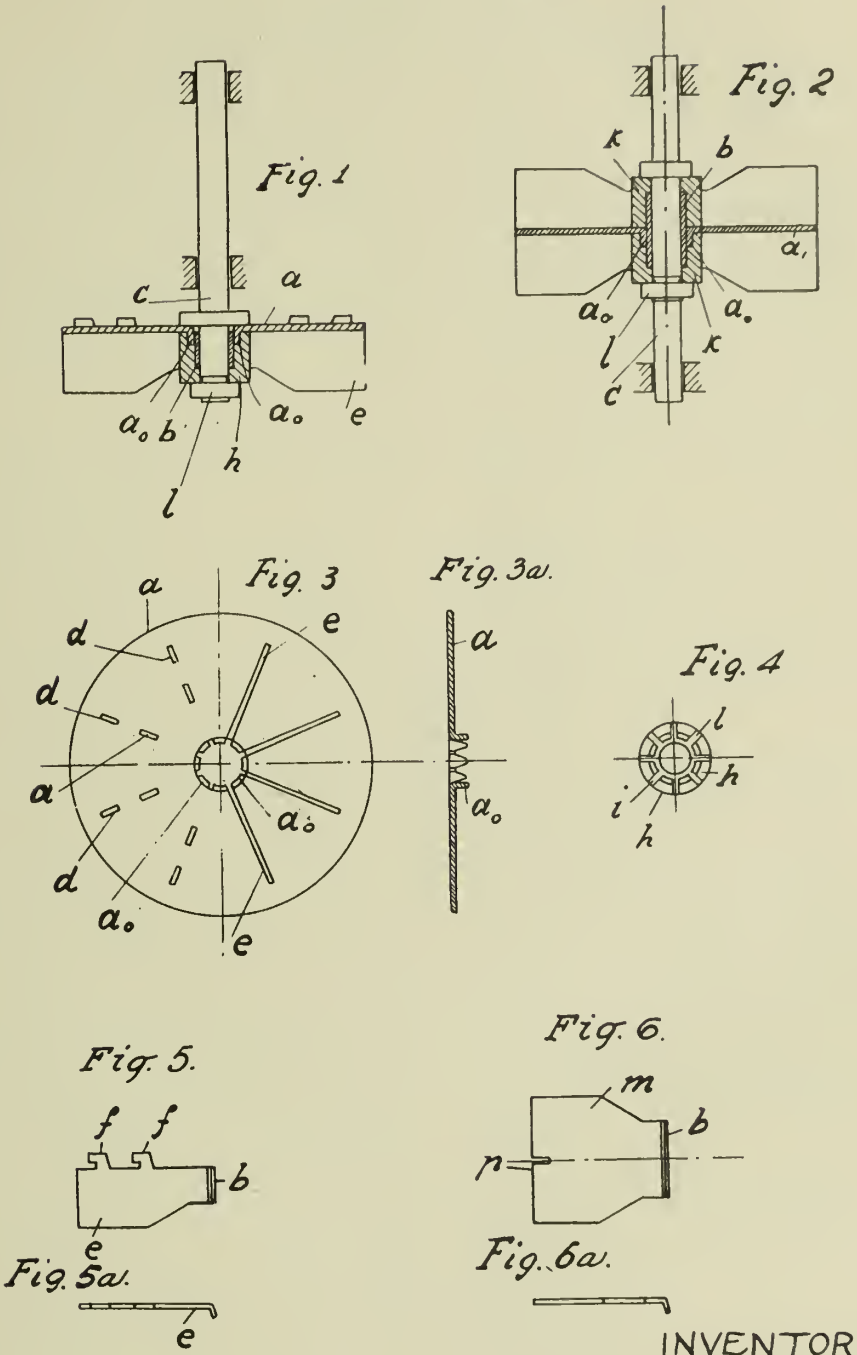

INVENTOR:
FERDINANDO FERRÉ
BY Haseltine, Lake & Co.
ATTORNEYS

Published May 25, 1943

Serial No. 291,094

ALIEN PROPERTY CUSTODIAN

PAPER CONTAINER

Ewald Schoeller, Berlin-Charlottenburg, Germany; vested in the Alien Property Custodian

Application filed August 19, 1939

This invention relates to impregnated paper receptacles or vessels and to a method of producing same.

It is an object of the invention to reduce the quantity of impregnating substance required for the receptacles.

With this and further objects in view, as may become apparent from the within disclosures, the invention consists not only in the structures herein pointed out and illustrated by the drawings, but includes further structures coming within the scope of what hereinafter may be claimed.

The character of the invention, however, may be best understood by reference to certain of its structural forms, as illustrated by the accompanying drawings in which—

Fig. 1 is a perspective view of one embodiment of my invention and

Fig. 2 is a perspective view of another embodiment.

Referring first to Fig. 1, the side walls of the paper vessel consist of a sheet of paper **3** which is wound up in the form of two turns, in such a manner that the outer end edge **4** thereof is opposed to the inner end edge **5** of the paper sheet. The inner adjacent faces of the paper sheet between the two turns are covered with a layer **6** of glue or paste before the winding action so that the sheet retains its wound-up shape. Secured to the lower end **7** of the cone thus formed is a bottom (not shown) which preferably consists also of two paper layers which are pasted together. The paste advantageously consists of a mixture of animal glue and formaldehyde.

By way of example, 10,000 paper receptacles having a capacity of 1 liter each may be made of a paper of a strength corresponding to a weight of 220 grams per square meter from which the sheets **3** and the bottoms are cut out. The respective portions of the sheet are then spread with a glue of the following composition:

Skin glue or size (glue from hides)	percent by weight	13
Hydrogen peroxide	percent	0,6
Formaldehyde	do	0,5
Water	do	89,9

About 45 kgs of this glue are required for the said 10,000 paper vessels.

The paper sheets are now wound up to form a cone as shown in Fig. 1 and the lower end **7** is closed by a bottom consisting of two layers of the same paper pasted together by the same glue and secured to the lower end **7** of the cone by the same glue. The vessel thus formed is now filled with hot, liquid paraffine and the paraffine is then poured out and the vessel is dried in a hot air current with its open end downward so that the excessive amount of paraffine may drip off.

Due to the separating layer **3** of glue inserted between the two layers of paper the paraffine cannot penetrate into the outer layer of paper so that only the inner layer thereof is impregnated. Therefore, the quantity of paraffine which would be normally required for the outer layer of paper is saved and, assuming that about 34 to 40 percent by weight of paraffine are absorbed by the paper in question which is a reasonable practical figure, only 17 to 20 percent of the total paper weight of the cup are required instead of 34 to 40 percent as in the known types of paper vessels. The saving thus effected means a considerable reduction in the cost of the paper vessels.

Referring now to Fig. 2, it will be seen that the cone in this case consists of two superposed separate paper sheets **8** and **9** which are secured together by an intermediate layer **6** of an adhesive and bent round to form a cone the seam of which is also secured by a layer of adhesive **16**. The lower end **7** of the cone may be closed in the same manner as described with reference to Fig. 1.

It is now possible, with the arrangement shown in Fig. 2, to use a thinner paper for the inner paper layer **9** than for the outer paper layer **8** so that the amount of impregnating substance required for the impregnation of this inner layer may be further reduced with respect to the total amount of paper forming the vessel.

In view of the reduction of impregnating substance thus afforded it becomes possible to use very stable impregnating substances which could not be used in the existing types of paper vessels due to their high price, such as for instance, artificial resins and hard wax. Paper vessels impregnated with such substances offer the advantage that they are stable against heat and, therefore, may be used for the reception of very hot liquids.

By way of example, a paper web of 60 grs/square meter is pasted on a paper web of 200 grs/square meter, by means of a pasting machine, using a paste of the following composition:

Skin glue	percent by weight	10
Hydrogen peroxide	percent	0,5
Formaldehyde	do	1
Water	do	88,5

About 80 grs of this paste are required per square meter. The sheets required for the walls, bottoms and covers of the paper vessels are then stamped or cut out of the composite paper web, the wall sheets are bent round in such a manner that the thin paper layer of 60 grs/square meter strength becomes the inner wall, the seams are

pasted and the bottom is inserted. The paper vessel may now be impregnated as above mentioned, by filling it with the impregnating substance, or by spraying the inside of the vessel. Thus, the impregnating substance penetrates into the inner layer **9** of the vessel but, due to the separating layer **6** formed by the paste, is prevented from entering into the outer layer **8** thereof.

It will be noted that it is possible in this manner to reduce the quantity of impregnating substance to about one fifth of that normally required.

Any suitable impregnating substances other than those above mentioned may be used for my novel paper containers to render them watertight or fat-proof. For example, albumen substances which are hardened by formaldehyde, such as animal glue, are known to be suitable to render paper fat-proof.

Also, any suitable paste may be used which is adapted to form a separating layer between the paper layers and to stop the impregnating substance from entering into the outer paper layer. Especially, albumen-containing
ces which are hardened by formaldehyd
like were found to be suitable, an emb
thereof being the above mentioned mi
animal glue (for example, bone glue, sk
gelatine) with formaldehyde. This mi
particularly suitable where paraffine is
an impregnating substance. In order
vent the dissolved glue from coagulating
gealing too quickly, a retarding agent,
hydrogen peroxide, may be added as abo
tioned. Contrary to the starch paste
used for such paper containers the af
tioned glue is absolutely impermeable t
fine and to most of the artificial resin
may be used for a watertight impregnati

The method of the present invention
described in detail with reference to spec
bodiments. It is to be understood, howe
the invention is not limited by such spec
erence but is broader in scope and ca
other embodiments than those specific
scribed and illustrated in the drawing.

EWALD SCHOE

PUBLISHED
MAY 25, 1943.
BY A. P. C.

E. SCHOELLER
PAPER CONTAINER
Filed Aug. 19, 1939

Serial No.
291,094

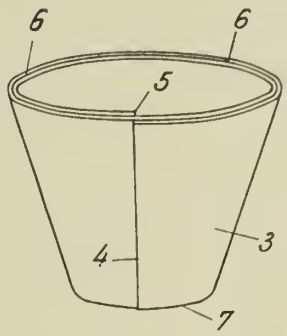

Fig. 1

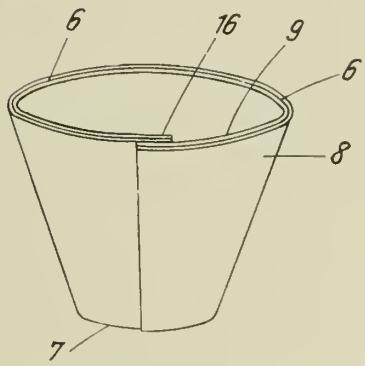

Fig. 2

Inventor:
Ewald Schoeller
Atty

Published May 25, 1943

Serial No. 291,636

ALIEN PROPERTY CUSTODIAN

CONSTRUCTION OF AIRPLANES

Alfred de Muyser, Luxemburg, Luxemburg; vested in the Alien Property Custodian

Application filed August 24, 1939

The present invention concerns the construction of airplanes.

Its object is to provide an improved method of building airplanes, and also an improved airplane.

The present state of airplane construction is characterized on the one hand by the reduction of the wing area and of the cross section of fuselages, that is to say by a reduction of the aerodynamic resistances, and, on the other hand, by an increase of the motive power which is intended to overcome these resistances.

It results from these tendencies that the amount of fuel necessary for a given flight increases while the volume available on the airplane for storing this fuel decreases. The solutions which were commonly employed, which were hardly sufficient previously, are not longer acceptable under the new conditions above set forth.

These old solutions consisted in placing one or several tanks intended to contain the fuel in the empty spaces left between the parts of a carcass constituting the frame of the airplane. These tanks were housed either in the fuselage or in the wings. There was always a loss of available space since the walls of the tank could not conform exactly to the shape of the carcass. This resulted from the fact that it was necessary to make provision for the removal of the tanks, and the manufacture of tanks does not permit of giving them the complicated shapes of walls which would have been necessary in order to have them fitting exactly in the empty spaces of the carcass.

An intermediate solution was also studied and experimented. It consists in making use of a main spar which also acts as tank, but this solution does not permit of occupying the whole available space in the skeleton because it is necessary to provide a secondary carcass fixed on the main spar and intended to support the external covering of the wing and to give it the desired shape. In this case also, consequently, there is a wing covering around the tank forming spar and a certain volume is lost.

Another intermediate solution, which can be considered as the inverse of that above explained, was also experimented. It consists in making a wing having a single spar which supports the bending stresses, the torsional stresses being supported by tanks secured to the spar. In this system also, the whole available volume of the wing is not utilized since the spar which supports the bending stresses must be positioned at the place where the wing section is of maximum height. Consequently, the tanks are necessarily of smaller height and their total volume hardly reaches one third or one half of the total volume of the external surface of the wing.

On the other hand, the reduction of the wing area, the cleaner outline of the supporting surfaces, and the reduction of section of the fuselage have led to employing, for the wings, the tail unit, the fuselage, etc., the so-called "stressed skin" method of construction, which affords the maximum strength for the minimum weight. Now, with the stressed skin construction, the problem of housing the tanks is still more complicated, and when it has been possible to house them it becomes extremely difficult to remove them, because, in order to get them out, it is necessary to provide holes in the skin or covering, which reduces the rigidity of the airplane structure and involves complications in the designing and the actual construction.

According to the present invention, the construction combines the two above mentioned tendencies, that is to say it avoids any lack of continuity of the stressed skin of the structure and, on the other hand, it gives, for housing the fuel, the whole of the volume inside the stressed skin.

In order to obtain this result, an airplane made according to the present invention includes the following elements.

a. A tank which constitutes the centre-section of the wing. This combined tank and center section is made in the same manner as a stressed skin wing section, with, of course, the further condition that this structure must be fluidtight;

b. outer wing sections mounted on said centre-section;

c. a fuselage carried by the tank and centre-section unit.

Therefore, according to the present invention the tank and centre-section unit constitutes the central and main part of the airplane. The fuselage, engine or engines, and wings are built around said part and thereon.

In addition to its own lift (since this unit is a portion of the wing system) said part receives the lift from the outer wing sections, and it transmits the whole of the lift to the parts that are to be supported (fuselage and engines). The tank and centre-section unit must therefore be capable of withstanding all the bending and twisting stresses which were previously supported by the spar or spars or by the wing covering.

The volume available for the fuel is maximum since it is equal to the external volume of the

wing less the volume of the metallic elements which constitute the tank. It should be noted that if the skin or covering is to be stiffened by pieces of closed cross section, it suffices to make some small holes therein and the internal volume of these stiffening pieces is utilized for containing fuel.

If the airplane is of the twin-engine or multi-engine type, the tank and centre-section unit will further support the nacelles containing the engines.

It is advantageous to limit the fluidtight tank, in the direction of the wing chord, to the central portion of the wing, because the volume of the trailing edge region is very small and that of the leading edge region is useful for housing the rods or cables for actuating the control surfaces of other parts to be operated.

Furthermore, the space corresponding to the trailing edge portion must nearly always be capable of housing the lift increase devices which are nearly always provided on modern airplanes. Likewise, the front region will serve to house the auxiliary parts for forming slotted wings.

However, in some cases, it will be advantageous to utilize the whole of the wing chord for the tank.

The tank and centre-section unit may, of course, be located as well above as below the fuselage. Also, the tank may, according to the invention, extend across the fuselage.

Other features of the present invention will result from the following detailed description of some specific embodiments thereof.

Preferred embodiments of the present invention will be hereinafter described, with reference to the accompanying drawings, given merely by way of example, and in which:

Fig. 1 is a vertical sectional view of the body of an airplane made according to the invention, the fuselage being located below the level of the tank and centre-section unit;

Fig. 2 is a horizontal sectional view corresponding to Fig. 1;

Fig. 3 is a side elevational view corresponding to Fig. 1;

Figs. 4, 5 and 6 are views, corresponding respectively to Figs. 1, 2 and 3, showing a twin-engined airplane made according to the present invention;

Fig. 7 is a vertical section showing the structure of the tank and centre-section unit according to the invention;

Fig. 8 is a similar view showing a modification.

Fig. 9 is a diagrammatic front view, in section, of an embodiment of an airplane according to the invention in which the fuselage is mounted above the tank and centre-section unit;

Fig. 10 is a view, similar to Fig. 9, of another embodiment in which the tank extends across the fuselage;

Fig. 11 is a view on an enlarged scale showing details of assembly;

In all the views of the drawing, reference character *a* designates the wing centre-section which, according to the invention, constitutes the tank, and is the main part of the airplane. Reference characters *b*, *b* designate the outer wing sections, and *c* the fuselage.

In the embodiment illustrated by Figs. 1, 2, and 3, the fuselage *c* is located below the level of piece *a*. The airplane shown by these figures is provided with a single engine.

Figs. 4, 5 and 6 show a twin-engine airplane. In this embodiment, the tank and centr unit supports, in addition to the outer tions *b*, *b*, and to the fuselage *c*, the tw *d* containing the engines.

Fig. 7 shows an embodiment of the of the tank and centre-section unit. I ample, the portion of the structure of which constitutes the tank is practicall to the central zone B—C. Zone C—D is for housing the lift increase devices, A—B serves to house the elements for ing the slotted wing structure.

On the contrary, in the embodiment the whole space of the wing structure is storing fuel.

In Figs. 7 and 8, I have shown at *e* th members and at *f* the reinforcing sectio or stringers.

In a general manner, the walls of the are defined as follows:

The upper and under walls are const the wing covering. In other words, t wall directly constitutes the upper si wing and the under wall constitutes t side of the wing. The front and rear constituted by transverse sections of th bulkheads (see Figs. 7 and 8). Of co portion forming the tank will be made so that it can hold fuel.

Fig. 9 shows an embodiment of the corresponding to a low wing airplane the fuselage is fixed above the tank an section unit *a*.

Fig. 10 shows another embodiment, plane in which the tank and centre-se *a* extends across the fuselage *c*. On hand, in this embodiment, a portion of outer sections constitutes fluidtight tan fuel.

In some cases, corresponding for in airplanes of small size or to airplanes it is desired, in order to simplify constr make the wing of a single piece, the ce tion will be made fluidtight and the u struction will be continued on either si tank and centre-section unit.

In the case of airplanes which mus very long radius of operation, the co which consists in making a tank the u under walls of which coincide with the u under surfaces of the wing may be ex the whole span of the wing, the latter be made of a single piece, as just above or made of a plurality of sections, as i by Fig. 10.

A detail of construction is shown b which is an enlarged view of the asse elements of Figs. 9 and 10.

As shown by this view, on the tank an section unit *a* there is fixed, for instance ing or welding, a T-shaped sectional e fuselage *c* is reinforced by an L-shaped element *z*, and the whole is assembled to means of bolts *r*.

For the assembly of the centre-secti of the outer section *b*, tank *a* is fitted edge with a L-shaped sectional elemen riveted or welded to the stressed skin The wing outer section *b* is similarly fi a L-shaped sectional element *u*. Th shaped sectional elements are secured by means of bolts which ensure the of *b* with *a*.

ALFRED DE MU

PUBLISHED
MAY 25, 1943.
BY A. P. C.

A. DE MUYSER
CONSTRUCTION OF AIRPLANES
Filed Aug. 24, 1939

Serial No.
291,636
4 Sheets-Sheet 1

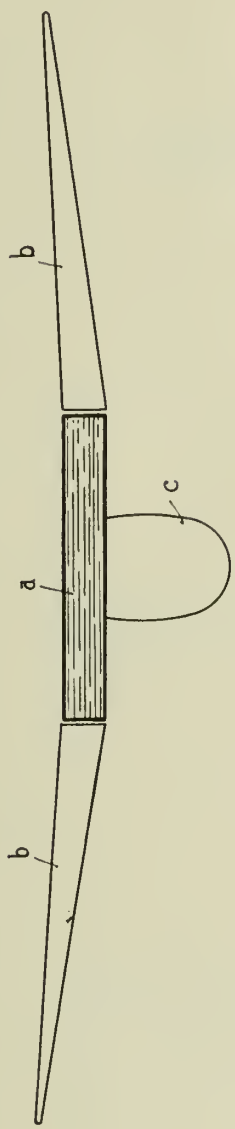

FIG. 1.

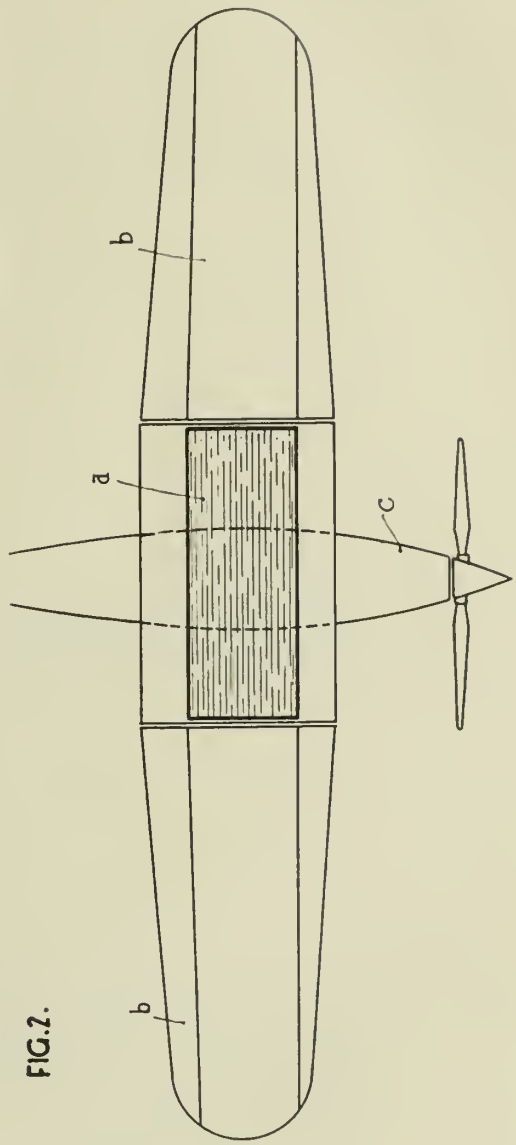

FIG. 2.

Inventor:
Alfred de Muyser
By Brown & Newland
Attorneys

PUBLISHED
MAY 25, 1943.
BY A. P. C.

A. DE MUYSER
CONSTRUCTION OF AIRPLANES
Filed Aug. 24, 1939

Serial No.
291,636
4 Sheets-Sheet 2

FIG. 3.

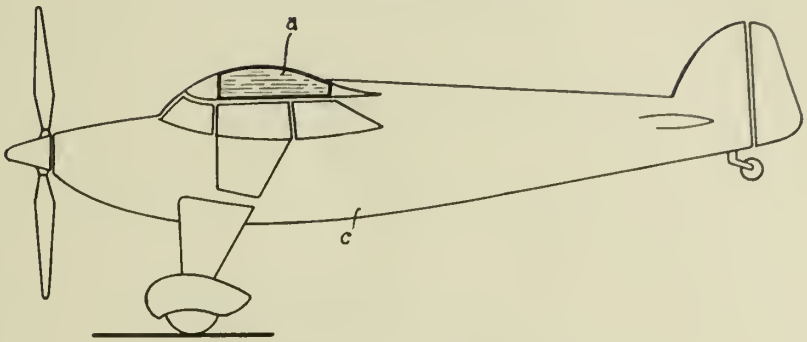

FIG. 4.

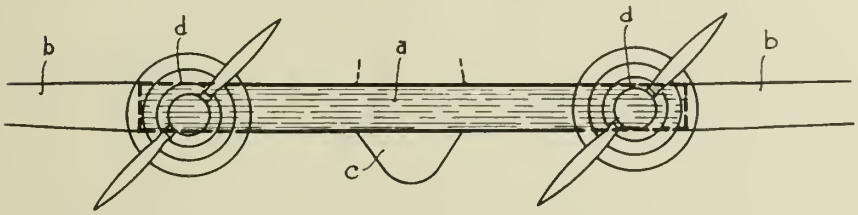

FIG. 5.

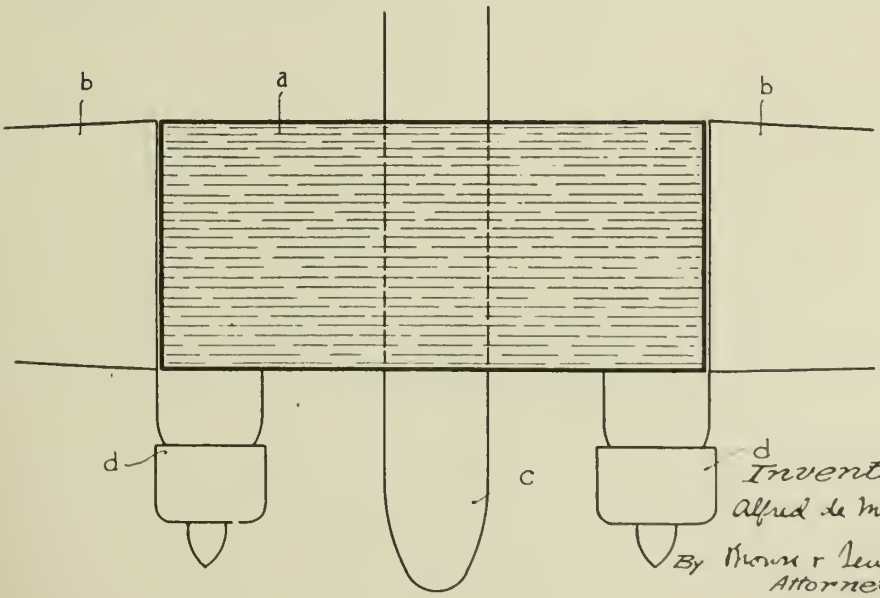

Inventor:
Alfred de Muyser
By Brown & Seward
Attorneys

PUBLISHED
MAY 25, 1943.
BY A. P. C.

A. DE MUYSER
CONSTRUCTION OF AIRPLANES
Filed Aug. 24, 1939

Serial No.
291,636
4 Sheets-Sheet 3

FIG. 6.

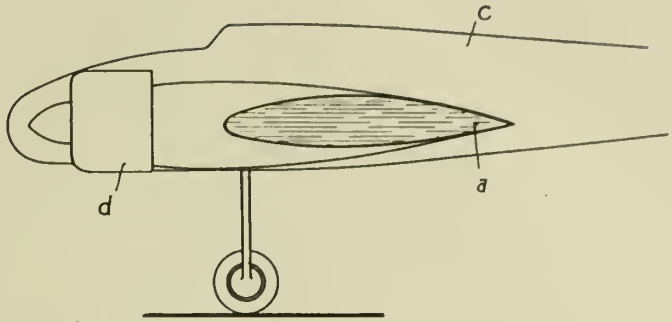

FIG. 7.

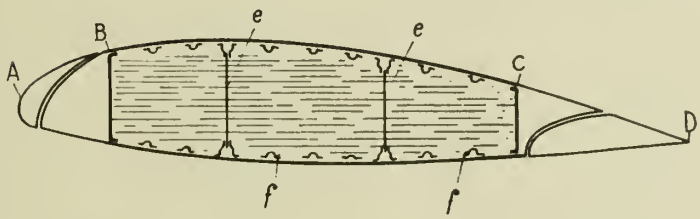

FIG. 8.

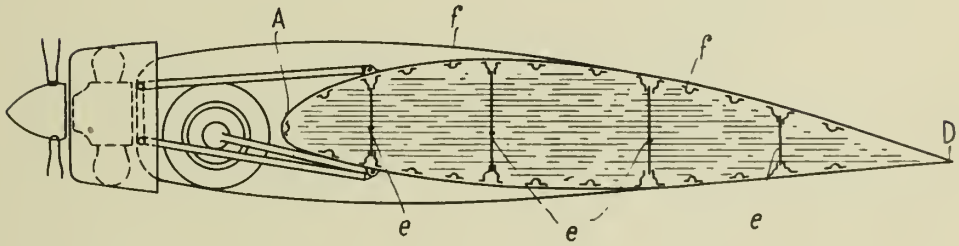

FIG. 11.

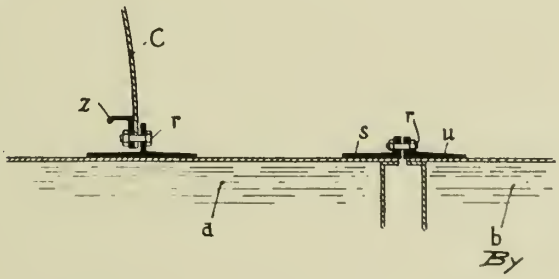

Inventor:-
Alfred de Muyser
By Brown & Lewand
Attorneys

PUBLISHED
MAY 25, 1943.
BY A. P. C.

A. DE MUYSER
CONSTRUCTION OF AIRPLANES
Filed Aug. 24, 1939

Serial No.
291,636
4 Sheets-Sheet 4

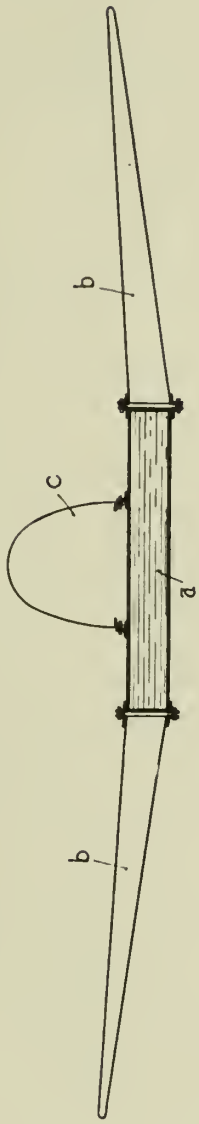

FIG. 9.

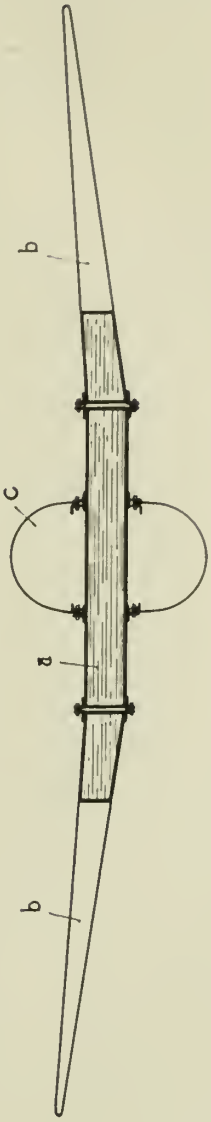

FIG. 10.

Inventor:-
Alfred de Muyser
By Brown & Seward
Attorneys

Published May 25, 1943

Serial No. 291,698

ALIEN PROPERTY CUSTODIAN

DEVICES FOR THE NUMERICAL FIXING OF THE MEASURING FIGURE OF MEASURING INSTRUMENTS, PARTICULARLY OF PAIRS OF SCALES

Sándor Tóth, Budafok near Budapest, Hungary; vested in the Alien Property Custodian

Application filed August 24, 1939

The invention relates to a device for the numerical fixing of the measuring figure of measuring instruments, particularly of pairs of scales, in which the measuring figures, subdivided according to orders of magnitude (e. g. single figures, tens, hundreds, etc.) are adjusted by means of mechanical feeler devices on corresponding figure rolls after the measuring instrument has adjusted itself into the position of equilibrium.

The device according to the invention is of much simpler construction as compared to known types of such devices, requires a substantially smaller amount of space, and is also substantially less expensive to manufacture than those known up to now. Another advantage of the apparatus forming the subject of the invention also consists in the fact that those parts of the device which are connected with the measuring instrument are of small size and of very light weight, whereby the load on the instrument shaft is very substantially reduced. Another advantage may be recognized in the fact that provision has been made to prevent the possibility of any incorrect measuring figure being ascertained owing to any external influence being exercised on the device.

Owing to a yielding connection between the measuring instrument and the member on which the feelers are to be operated, any damage being suffered by the device or by the measuring instrument owing to mishandling is excluded.

Further, the figures for all orders of magnitude are according to the invention determined from the same mark on the member on which the feelers are to be operated, which circumstance enables the device to be constructed so as to be of great simplicity, whilst at the same time accuracy can even be increased, as the precise adjustment of a single mark will assure accuracy for all orders of magnitude.

There exists also the possibility that in case of any extension of the measuring range, e. g. in the case of pairs of scales for additional insertion, the figures of additional insertion and the figures ascertained by means of the feelers should be indicated summed-up.

Owing to its small requirements of space, the device can be mounted on the scale side of the head of a pair of scales, whilst at the same time this arrangement does not prevent indication by means of a pointer.

On the accompanying drawing an embodiment shown by way of example of the device according to the invention, as applied to a pair of scales, is shown in a diagrammatical manner, although it is obvious that this device can also be employed in connection with other measuring instruments. Fig. 1 represents one part of the feeler disc in side elevation, Figs. 2 and 3 represent two possibilities of construction of the fixing of the marks on the feeler disc, Figs. 4 and 5 illustrate the yielding connection between feeler disc and pointer shaft, Figs. 6, 7, 8, 9 are representing the various feelers in side elevation, Figs. 10 and 11 represent an assembly of the whole feeler and printing device, Fig. 12 represents a detail, Fig. 13 shows the construction of the device for additional insertion and Fig. 14 illustrates the mounting of the device on the head of a pair of scales.

Figs. 1, 2 and 3 show a disc 1 flexibly connected with the shaft of the pair of scales, and the small leaflets 2 inserted into this disc. In order to reduce the load on the instrument shaft and/or the gyratory moment of the moved part, the disc 1 is preferably made of light metal, whereas the members carrying the marks, i. e. the leaflets 2, are made of resisting material, e. g. of steel. As appears from the drawing the periphery of this disc 1 is divided into a certain number of equal divisions and slotted in the radial direction. Into each radial slot there is inserted a thin leaflet 2 preferably made of spring steel, and fastened into the slot. Each of these leaflets presents a recess 3 (Fig. 3) so that if they are inserted into the slots of the disc 1, their legs 4 will project in the radial direction over the slots, so as to prevent any possibility of their becoming shifted in the axial direction. In order to fasten the leaflet 2 in the radial direction also, it is possible to provide in the leaflets, as shown on Fig. 2, a bore-hole 5 within the range of the periphery of the disc 1. After inserting the leaflets, the material of the disc 1 is caulked by means of a pointed caulking tool into this small bore-hole 5 and thereby a safeguard against any displacement of the leaflets in the radial direction is obtained. In the case of the arrangement represented in front elevation, plan view and side elevation on Fig. 3, two flaps 6 are cut out from the leaflets 2 in the vicinity of the periphery of the disc 1, which flaps are, after the leaflets have been inserted into the slots of the disc, bent from the position shown in full lines, into the position traced in dotted lines, i. e. bent into the grooves 7.

Figs. 4 and 5 represent the elastically yielding coupling between the disc 1 and the shaft 8 actuated by the pair of scales, which coupling enables the shaft to continue its deflection, whilst

the disc 1 is held fast. At the end of the shaft 8 a sleeve 10 with disc 11 is fixed. On this sleeve the casing 13 and the feeler disc 1 connected with it are supported by means of a hub 12. The collar 15 secures the casing 13 and the hub 12 running loose on the sleeve 10 against any axial displacement. From the disc 11 there projects a pin 16, whilst from the casing 13 there projects a pin 17, on which pins the impact plates 18 and 19 supported in a rotatable manner on the hub 12 of the casing 13 are leaning on both sides, the said impact plates extending at their ends parallel to the two pins. A spiral spring 20 is under normal conditions pressing the two impact plates against the pins 16 and 17. The sleeve 14 prevents any axial displacement of the impact plates 18, 19.

In case the shaft 8 is rotated, this motion is transmitted by means of the spring tension on the disc and the latter is carried along. If in the case of this motion the disc 1 is held fast, the spring 20 will be compressed and owing to its suitable construction the disc 1 will be able to lag in the rotation up to about 270° relatively to the shaft. If the disc 1 is released again, the spring 20 will again exactly re-establish the normal position as between the shaft 8 and the disc 1, as the pins 16 and 17 are held securely in their position of rest by the tension of the spring.

Instead of this yielding connection between the shaft and the feeler disc, it is also possible to construct the leaflets 2 of so great length that in case of the motion of the disc they will become resiliently bent during the feeling operation and will thereby render deflection without permanent deformation possible.

In what follows we shall, by way of example, describe the feeler device for a pair of scales having a weighing range of 2000 kg and an accuracy of indication of $1/1000$ of the maximum load. In this case the external edges of the leaflets 2 in the feeler disc 1 are preferably situated at a mutual distance of 50 units of indication. In the case of a thousand units of indication, this division must accordingly repeat itself on the periphery of the feeler disc twenty times. In order to ensure that the zero figure and the maximum figure on the scale, and accordingly also on the feeler disc, should not coincide, the periphery of the disc is preferably divided into 21 parts, so that one division will remain free between the zero and the maximum value, and separate leaflets 2 will correspond to the zero value and to the maximum value, respectively.

Figs. 6–9 represent the feelers for the feeler device assumed. In the case of an accuracy of $1/1000$ of the maximum load, 0, 2, 4, 6, 8, . . . kg should be indicated in the lowest order of magnitude. For each order of magnitude (single figures, tens, hundreds, etc.) one feeler should be provided. The feelers for the various orders of magnitude are of T-shape, possess exactly equal dimensions and are presenting on their legs 22 tooth systems 23 to enable them to be driven. In the front surface of the feeler 21 for single figures (Fig. 6) ten times five steps 24 are provided alongside each other. Each step corresponds to one unit of indication for figures repeating themselves from 0 to 8, so that 50 units in all are marked on the whole width of the feeler.

Fig. 7 represents a correcting feeler 25 the width of which is exactly the same as that of the other feelers, and which carries on its front side a pointed tooth system 26 comprising fifty teeth. Its leg 27 is of greater length than that of the

other feelers, the purpose of this arra
being explained further below. In the leg
feeler an oblong hole 28 is provided into
peg 29 projects from the adjacent fee
single figures 21.

Fig. 8 represents the feeler for tens 3
on its front side shows ten steps 31 wh
preferably arranged in a direction opp
that of the steps in the feeler for single

Fig. 9 represents a feeler 32 the front
of which is, in contradiction to those me
before, made straight-lined. Such a feele
ployed for the orders of magnitude of h
as well as for those of thousands.

These feelers are, for the purpose of es
ing the measuring figure, cooperating w
leaflets 2 of the disc 1 and are mounted on
the other in a common casing 33 in such
ner that their lateral and front surfaces a
ated exactly in the same planes. At th
time the feelers are arranged in parallel
other in the casing and can be driven by
of their tooth system 25 by correspondi
wheels, independently of each other. I
to ensure that in case of a movement of
1 during the operation of the feelers no d
tion of the sensitive parts should take p
would be possible to support the casing 3
feelers so as to be resiliently yielding and
able around the gear wheel shaft 36. As
on the left-hand side of Fig. 10 the fee
arranged in a radial position and deflecte
relatively to the plane of the correspondi
lets 2. The feelers are moved during the
of their operation towards the disc 1, i. e.
the leaflets 2. Owing to the arrangem
scribed of the feelers, each feeler will in
operation of the feelers make impact aga
same leaflet 2 or, in the limiting case i
the centre lines of two leaflets 2 are situa
actly opposite to the lateral edges of the
against the same two leaflets. The co
feeler 25 is of a slightly greater length t
others and is, in the position of rest, kept
peg 29 of the feeler for single figures
under the action of the spring 34 (Fig
supported on the lower edge of the oblo
28, in such a position that the tooth sy
this feeler will project from the plane of th
feelers. In consequence hereof, when the
are operated, it is first the correcting f
which will come into contact with a leafle
will bring the disc into such a position as
sure that a leaflet 2 should always make
against the middle portion of a step of th
for single figures 21. On the places coop
with the feeler for single figures and th
for tens, the upper edges of all leaflets 2 a
ated on the same circular periphery, and,
sequence thereof, the adjustment of the
ascertained by means of the feelers in th
ders of magnitude will be effected in acc
with the necessary movement of a feeler
step makes impact against a leaflet 2. As
feelers for hundreds and thousands no st
provided, those places of the leaflets 2 wh
operate with these feelers are fitted with s

In view of the fact that the distance
two adjacent leaflets 2 corresponds to 5
of indication, corresponding to 100 kg
leaflet will be arranged on the place coop
with the hundreds feeler, so as to be of
depth, corresponding to one step depth
ceding feelers, from 0 to 9 in successio

cordingly this stepping of the leaflets is repeated twice along the whole periphery.

As the division on the feeler disc corresponds to 100 kg, each group of 10 leaflets for the determination of the thousands figures will possess the same height at the respective cooperating places. Accordingly the first ten leaflets remain maintained in the original height, the next ten will be made lower by one step and the twenty-first one will be made lower by two steps.

In the case of the type of construction described the periphery of the feeler disc has been divided into twenty, that is to say, twenty-one parts. It would, however, also be possible to divide the periphery into ten parts; this would apparently have the advantage that a smaller number of leaflets 2 would have to be accommodated on the feeler disc. The drawbacks connected with this arrangement are, however, preponderating, as, firstly, the feelers would in that case have to be made of double as great width and in the case of a width of feeler of 36° the difference between its arc and its projection in the direction in which the feelers are operated would already cause appreciable differences at the ends of the feeler; it would accordingly no longer be possible to make the front surfaces of the feeler straightlined, they would have to be made arcuate and at the same time the various steps would have to be made of different width. Moreover, the mass of the feelers and therewith the moment of acceleration during their rapid movement would enter into play in a greater extent.

It may appear to be necessary to alter the number of leaflets at different ranges of weighing. Thus it would be necessary for instance in the case of a maximum load of 500 kg to employ, with an accuracy of $1/1000$, 25, that is to say 26 leaflets, as in the case of twenty leaflets one division would correspond to 250 kg, and accordingly the establishment of the measuring figures in decimal order would not be feasible.

It should be added that in the case of some ranges of weighing, e. g. in the case of a range of weighing of 1000 kg and an accuracy of $1/1000$ with twenty, i. e. twenty-one divisions on the feeler disc the stepping of the tens feelers, as well as of the cooperating parts of the leaflets has appeared to be necessary. Notably, in this case one division was equal to 50 units, i. e. to 50 kg. In this range it was necessary to provide five steps on the tens feeler, in view of the fact that the width of the feeler is equal to the distance between two leaflets. Accordingly, if the cooperating parts of the leaflets 2 in the feeler disc were, as in the case of a maximum load of 2000 kg, made without any stepping, it is only the figures 0, 1, 2, 3, 4 which it would be possible to ascertain in this order of magnitude with this feeler. In order to enable the other figures from 5 to 9 to be obtained, each second leaflet 2 has to be constructed five steps lower at the cooperating places.

It is understood that, instead of twenty-one divisions, it is also possible to select a greater number, and that the combination of steppings, of feelers and leaflets can be selected in the case of each range of weighing in accordance with requirements.

Figs. 10 and 11 represents the whole feeler and control device in front of and side elevation. The feelers are—as already mentioned—arranged in a casing 33 fixed on the base plate 35. The tooth systems 23 of the various feelers are engaging with four gear wheels,—not shown—which are fixed on four hollow shafts 36 mounted one into the other. The other end of each of these hollow shafts carries an arm 37, which arms are rotating together with these shafts. On each hollow shaft a gear wheel 38 is loosely mounted which, through the transmission wheel 39, drives the figure roll 40. Each gear wheel 38 is on one part of its periphery fitted with a pawl tooth system 41 into which a pawl 44 fixed on the end of an arm 43 pivotable around the pivot 42 is able to engage. This pawl reaches over all the four gear wheels 38, in such a manner that it holds fast all the four wheels when coming into engagement. One part of the periphery of the gear wheel 38 is cut away and serves as a support for one end of a spiral spring 45 which by its other end is supported on the arm 37. This arm leans under the action of the spring 45 on the stop 46 of the adjacent gear wheel 38. On the solid internal shaft 47 of the set of hollow shafts 36 there is loosely mounted behind the arms 37 a further arm 48 which is fitted with an axial extension 49 projecting over all the four gear wheels 38 and cooperating with the arms 37. Each arm is subject to the force of a spring 50 which on the one hand leans against a fixed stop 51, whilst on the other hand it is hooked into the arms 37. The spring 50 always endeavours to deflect the arms in the counterclockwise sense and at the same time forces them against the extension 49 of the arm 48. On the lower end of the arm 48 a pin 52 is provided on which one arm of the double arm lever 54 leans under the pulling action of the spring 53. The second arm of this lever 54 is by means of a pin 55 supported on a cam 56 fixed on the shaft 57. The shaft 57 carries a further cam 58 which through the pin 59 cooperates with one of the legs of the double-arm lever 43.

In the plate 66 the shaft 67 is supported, which at one of its ends carries a handle (not shown) and at its other end an arm 68. On the shaft 67 a hub 69 having an arm 70 and a cam 71 is loosely mounted. To a pin 70*a* of the arm 70 a spring 72 joins on which in the case of the deflection of the arm is tensioned to the extent of 180°. The pin 70*a* cooperates with a stop 73 provided at the end of the crank 74 of the shaft 57 and is connected with the spring 75. On the plate 65 a rod 62 is guided which at one end is supported on the cam 71 and which with its other end cooperates with one arm 64 of the pressure hammer. The arm 64 is held fast by a pawl 63 which is released by a nose of the arm 54.

In the plate 76 an arm 77 made of tough and thin material is also supported, which at one of its ends carries a triangular plate 78 the width of which is greater than the mutual distance of three marks 2 on the feeler disc 1. On the pin 79 a small light-weight pendulum 80 is mounted, the upper end of which is slotted and fitted with a likewise slotted circular counter-weight 81. This counter-weight serves for balancing the lower longer part of the pendulum 80 which is fitted with a triangular aperture 82. (Fig. 12). In this aperture there is arranged a pin of the extension 49 of the arm 48 in such a manner that in the position of rest of the pendulum the pin can be removed from the aperture 82. The arm 77 passes through an aperture of the base-plate 35 as well as through the slot 85 provided in the slide 84. This slide will under the pressure of the spring 86 become supported on one

end of the lever 87 the other end of which is connected with a guided rod 88 and which pulled by the spring 89 presses the bar on the cam 71.

The method of operation of the apparatus described is the following:

As soon as the pair of scales has adjusted itself into the position of equilibrium, the handle and thereby the shaft 67 is rotated in the direction indicated by the arrow (Fig. 11). The arm 68 will immediately make impact against the arm 70 and will accordingly set the latter and the cam 71 into rotation and will tension the spring 72. During the rotation of the cam 71 the rod 62 is pressed down and thereby the arm 64 and the hammer 65 are deflected against the effects of a spring (not shown) until the pawl 63 drops on the stop of the arm 64 and keeps the latter fixed in this position. After the shaft 67 will have become deflected by 180°, the pin 70*a* will come into contact with the stop 73 of the arm 74. In the case of a slight further rotation beyond 180°, the crank 70 will pass the dead centre position and will from this point onward return automatically in the same direction under the action of the spring 72 into its initial position. The spring 72 is dimensioned in such a manner that during its release it is able to tension the spring 75 as well as all other springs of the apparatus. During this second period, the handle may remain standing still or it may be moved further, but it will not be possible to exert any influence on the further process by its means. This measure, that during driving by the crank the process taking place is not influenced and that it is only by the release of the spring 72 that the operation of the apparatus is started, serves the purpose of preventing any possibility of wilfully interrupting the process of feeler operation by holding the handle fast in an intermediate position in which the feelers are in contact with the feeler disc. During the release of the spring 72 it is at first the rod 88 which is lifted by means of the cam 71 and in consequence hereof the slide 64 is led down by means of the lever 87. During this motion of the slide 64 the prefeeler 77, 78 lifted to a high level, descends until it comes into contact with the internal edge of the leaflets 2 in the disc 1. Should the pair of scales be in a position of rest at this moment it will be possible for the further processes to take place undisturbed as follows:

Simultaneously with the movement of the preliminary feeler 77, 78 the shaft 57 is set into rotation by the cooperation of the stops 70*a* and 73 and the spring 75 is tensioned. During this motion of the shaft 57 the lever 43 will immediately at the beginning be swung out by the cam 71 and the pawl 44 will be lifted from the teeth 41 of the gear wheels 38 against the action of the spring 61. After a deflection of about 30°, i. e. after the preliminary feeler 77, 78 has made impact against the feeler disc, the bellcrank lever 54 will in accordance with the elevation of the cam 56 be lifted around the pivot 42 against the action of the spring 53, so as to enable the arm 48 to be deflected under the pressure of the arm 37 driven by the four springs 50. At the same time the arms 37 are on the one hand moving the feelers through the set of hollow shaft 36 against the feeler disc and on the other hand the figure rolls 40 will be deflected through the gear wheels 33. The deflection of each arm 37 will be effected in such an

extent until the feeler driven by that a
impact against a leaflet 2. The arm 54
by the cam 56 in such an extent as t
each feeler to be moved unhindered u
lowest step. During this motion it is the
ing feeler 25 which will first get into
ment under the action of the spring 37
bring the leaflet in question into the
step position. It is only after the co
of this process that the other feelers w
into contact.

After the figure rolls have been adj
accordance with the feeler motions, the
will reach a recess on the cam 58 and
44 will under the action of the pulli
of the corresponding spring catch into t
system 41 of the four gear wheels 38
thereby bring the figures on the figure
into the central position. Notably, i
otherwise happen, owing to the large
transmission between a step height (a
to 0.4 mm) and a figure size (3–4 mm)
the case of the smallest difference in th
of the steps or of the leaflets the figur
not be in alignment. This correction is
possible by the connection between fe
figure rolls established by the spring
accordingly, the feeler figure adjusted
held fast, the pin 55, will, after a smal
rotation of the shaft 57 drop into the
and the arm 54 will be pulled down by th
53 and will during this motion return,
the arm 48, 49, the arms 37 i. e. the f
a positive manner into the initial posi
the gear wheels 38 are held fast by the
this movement will cause the spring 4
come tensioned. Simultaneously with th
ing-back of the feelers, the nose of the
will come into engagement with the paw
will deflect the latter until the pawl j
from the nose. During this motion the
i. e. the hammer 65 will be released a
sure will be exerted under the effect of
(not shown). The arrangement acco
which the pressure hammer i. e. its
wound up direct by the handle, and no
rest of the control gear, by the spring
the purpose of ensuring that the parts
72, 73, 75 should be released of the su
force of the pressure spring. The adju
ure can also be read on another count
anism connected with the pressure dev
through an inspection hole provided in
ing. Therewith the whole procedure
pleted and the device is ready for a n
operation. The feeler figures remain
for the purposes of remote transmissio
like until at the beginning of the next
ure of operation of feelers the pawl 44
out from the tooth system 41 and th
rolls are, under the action of the tension
45, returning into the zero position.

If, at the beginning of the feeler o
when the preliminary feeler 77, 78 make
against the feeler disc, the latter is in
the preliminary feeler will be carried
the leaflets 2 and the arm 77 of the pre
feeler will swing out the pendulum 80
when operating the driving mechanism
extension 49 of the arm 48 which di
feelers will be unable to find its way
slot of the aperture 82 in the lower en
pendulum 80 (Fig. 12) and this arm w
fore be unable to continue its moveme
feeler operation is accordingly prevent

rest of the procedure can be performed unhindered, only the hammer **64** will not print any figure weight but will print special symbols, e. g. crosses or the like, for indicating an erroneous operation.

If the feeler disc has been in a position of rest at the beginning of the feeler operation and if an impact takes place during the feeler operation, this will not influence the result of feeler operation, as the correcting feeler **25** will hold the feeler disc fixed and the impact will be absorbed exclusively by the yielding coupling (Figs. 4 and 5) provided between the feeler disc and the shaft of the pair of scales.

If the arcuate edge of the preliminary feeler **78** is constructed so as to contain the tooth system of the correcting feeler **25**, the preliminary feeler will be able to replace the latter also at the same time. For this purpose it is necessary that the recess **85** provided in the slide **84** (Fig. 11), which under other circumstances is constructed as a triangle placed on its apex, should be fitted, in addition, with a vertical slot **90** at the stop. The method of operation would in that case be the following: the preliminary feeler is, in the position of rest, kept in the central position by the arm **77** becoming supported in the apex of the triangular recess **85**. When letting down the preliminary feeler, the wider part of this recess **85** will, in case the feeler disc is moved, render a lateral movement of the feeler **77** possible. In case, at the moment when the preliminary feeler makes impact, the feeler disc is at rest, the arm **77** will in case of a further movement of the slide **84** be situated exactly below the recess **90**, or, if the leaflet **2** on which the feelers are to be operated is not in the central step position, slightly sideways thereof. The recess **90** is dimensioned in such a manner, that in the case of this position slightly sideways of the central step position, the arm **77** will still be gripped by it and thereby the feeler disc will, similarly as by means of the correcting feeler **25**, be brought into the central step position.

It would of course also be possible to employ, instead of the mechanical drive by means of the handle. electrical operation e. g. by means of a motor or magnet, in which case it is, instead of the arm **74**, the cam **71** that will be mounted on the shaft **57**, and this shaft will be driven direct by means of the motor or magnet. In the case of this arrangement it is possible to provide for the pendulum **80**, instead of mechanically holding fixed the extension **49** of the arm **48**, to operate a highly sensitive electric contact e. g. thin wires dipping into mercury, which contact will in case of the slightest deflection of the pendulum **80** cut-out the electric drive i. e. prevent the feeler operation, or will return the arms **37** by means of a magnet e. g. with the aid of the arm **48**, **49** into the initial position.

As appears from the foregoing description, the whole process of feeler operation takes place under the action of wound-up springs in a perfectly automatic manner and within a very short time, within about a few tenths of a second, this being rendered possible by the fact that the mass of the parts moved during the operation of the feelers is extremely small and the paths covered are extremely short, so that the feelers can be operated rapidly, and can be stopped without any substantial shocks. In order to control the speed, it is possible to combine with the shaft of the crank **73** a damping device per sê known in connection with pairs of scales.

Fig. 13 illustrates a device which in the case of so-called "additional insertions" makes it possible that the indicating device should indicate and/or print the total result of weighing i. e. the additional insertion plus the weight indicated by the pointer of the pair of scales. The additional insertion is effected in the usual manner by the operation of a hand-wheel or handle. A part driven by the motion represents one part of a coupling yielding in both directions, as illustrated on Figs. 4 and 5, whereas the other part is connected with a Bowden train **99**. This equipment can be built-on to the mechanism described. For this purpose the connection between the arm **37** and the gear wheel **38** at the highest order of magnitude is amplified by a coupling. This coupling consists on the one hand of small countersunk holes **100** provided in the gear wheel **38**, and, on the other hand, of a pointed peg fixed in the resilient arm **37** made of sheet steel. This peg will under the action of the resilient arm **37** project with its point into the countersunk hole **100** and will, in case the arm is moved, carry along the gear wheel **38**. This connection must be sufficiently strong to prevent its being disconnected by the spring **45**. By way of new equipment the following is added: a shart **101**, on which a gear wheel (not shown) engaging with the wheel **38** and connected therewith a cam wheel **102** is mounted. These wheels should only be mounted on the gear wheel **38** of the highest order of magnitude. Further, a plate **103** connected with the Bowden **99**. In accordance with the possibilities of additional insertion, the plate carries a plurality of pegs **104**, whilst its upper edge is fitted with a tooth system. The pawl **105** is supported by means of its stop **106** on a cam (not shown) of the driving shaft **57** of the feelers, whilst its other end projects by means of the pin **107** into the tooth system of the plate **103**.

If now the weighing range of the pair of scales is increased by additional inserted weights and the hand-wheel or handle is rotated by Bowden **99** will move the plate **103** in the direction of the arrow (Fig. 13) until the right-hand peg **104** gets into the position shown in dotted lines and thereby rotates the cam wheel **102** by one tooth division. Accordingly the gear wheel **38** will become turned in the counter-clockwise sense. During this motion the pointed peg of the arm **37** held fast will jump out from the original recess **100** and will drop into the next one. This will cause the gear wheel **38** and the figure roll belonging to it to be rotated—according to the magnitude of the additionally inserted weight by one or more figures, according to what corresponds to the weighing range of the pair of scales. Thereby the figure corresponding to the additionally inserted weight is adjusted on this figure roll. During the next following feeler operation the gear wheel **38** i. e. the figure roll is deflected further in accordance with the feeler figure from this pre-adjusted position, so that in the print on this roll the figure of the additional insertion plus the feeler operation is obtained.

It is understood that the additional insertion should be effected before operating the feeler device. In order, however, to render any mishandling impossible, the possibility of damaging or influencing the apparatus by simultaneous operation is prevented. For this purpose the pawl **105** will in case of the deflection of the shaft **57** immediately engage into the tooth system of the

plate **103**. If at the same time the lever for additional insertion is moved this movement is not transmitted on the plate **103**, but absorbed by the described coupling between the lever for additional insertion and the Bowden train.

Nor can the feeler figure be influenced by holding the handle for additional insertion fixed in the middle position, as owing to the pointed teeth of the plate **103** the pawl **105** will always, in a positive manner, produce a correct position. The motion of the plate caused by an additional insertion is chosen in such a manner that the pegs **104** will in each position of rest permit an unhindered rotation of the cam wheels **102**.

For the usual weighing ranges of one, two or five hundred or one, two or five thousand kg, it would be necessary that in the case of an additional insertion the figure roll for the highest order of magnitude should be rotated by one, two or five figures. In order to keep this motion uniform, a distance of one or more figure divisions is left for one or more additional insertions between the consecutive figures. In consequence hereof the motion for additional insertion will for each weighing range always amount to one figure and the figures will run, e. g. in the case of 5000 kg and two additional insertions, as follows: 0, 5, 10, 1, 6, 11, 2, 7, 12 . . . etc.

Up to now all indicating and printing devices of this kind were mounted at the rear on the head of the pair of scales, and in consequence thereof the simultaneous observation of the scale and the operation of the feeler device was hardly possible. The apparatus according to the invention only takes up a so small amount of room

that it can be fixed without any dim
the scale side of the head of the pair
In Fig. 14 the assembly of the appa
the scale side of the head of a pair of
shown diagrammatically. On the fron
the pointer shaft **6** there is fixed the f
1 according to the invention which p
also carries the pointer **91**. The pointe
structed in such a manner, that it is not
by the feeler device during this motion.
absolutely necessary that the pointer
be fixed on the feeler disc, it may just
fixed on the pointer shaft **8** behind t
disc. The main point is only that th
should during its rotation not collide ag
feeler and indicating device, this being
by the bending shown on the drawi
pointer **91** moves in front of the scale
on a frame **93** of the casing **94**. As
part remains free on the scale between
position and the maximum load—in the
described ½1st part of the periphery—i
which the pointer will never pass, it i
to use this space for the suspension of
and indicating device. At this place a
is fixed on the frame **96** and carries
the base plate **35** of the whole device.
is covered in the usual way by a glass
which has at its centre a sufficiently la
ture for the feeler and indicating de
this base plate the cover **98** is fixed fr
the handle projects and in which an o
a slot is provided for the cards to be i

SÁNDOR

PUBLISHED

MAY 25, 1943.

BY A. P. C.

S. TÓTH

DEVICES FOR THE NUMERICAL FIXING OF THE MEASURING FIGURE OF MEASURING INSTRUMENTS, PARTICULARLY OF PAIRS OF SCALES

Filed Aug. 24, 1939

Serial No. 291,698

2 Sheets-Sheet 1

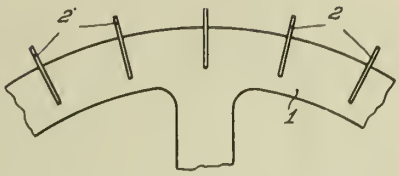

Fig. 1.

Fig. 2

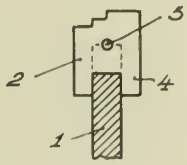

Fig. 3.

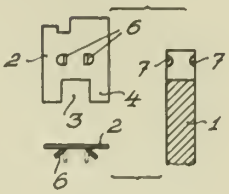

Fig. 4.

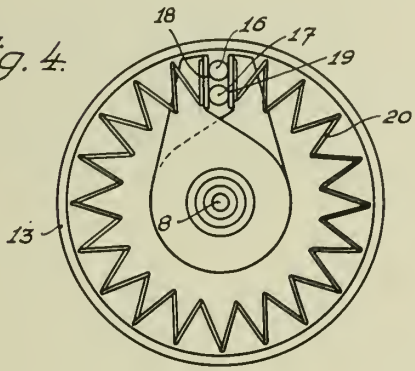

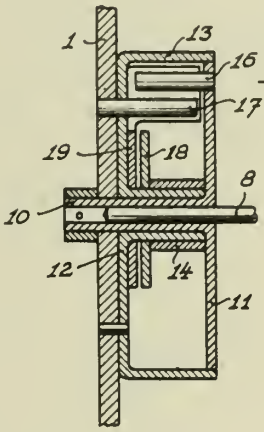

Fig. 5.

Fig. 6.

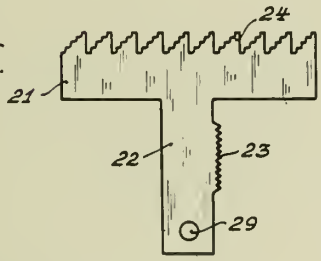

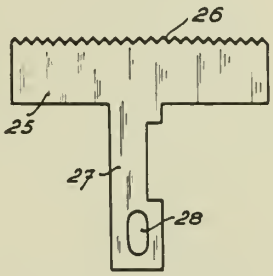

Fig. 7.

Fig. 8.

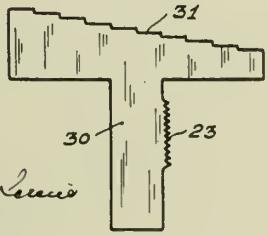

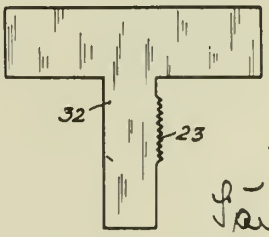

Fig. 9.

Witnesses:

Inventor:

Sándor Tóth

PUBLISHED

MAY 25, 1943.

BY A. P. C.

S. TÓTH

DEVICES FOR THE NUMERICAL FIXING OF THE MEASURING FIGURE OF MEASURING INSTRUMENTS, PARTICULARLY OF PAIRS OF SCALES

Filed Aug. 24, 1939

Serial No. 291,698

2 Sheets-Sheet 2

Fig. 10.

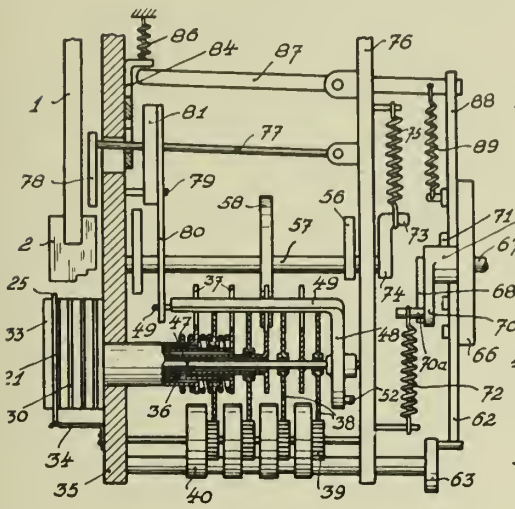

Fig. 11.

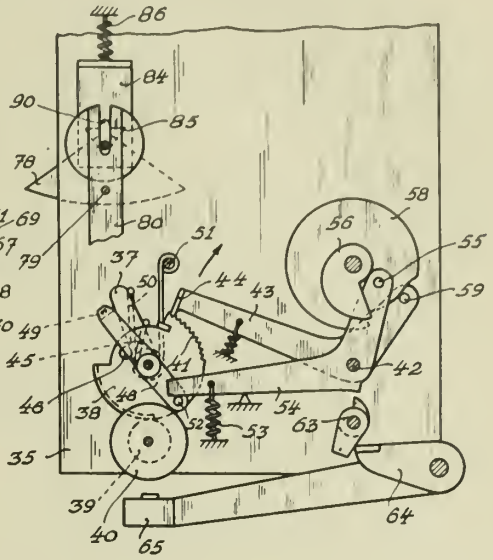

Fig. 12.

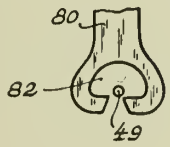

Fig. 13.

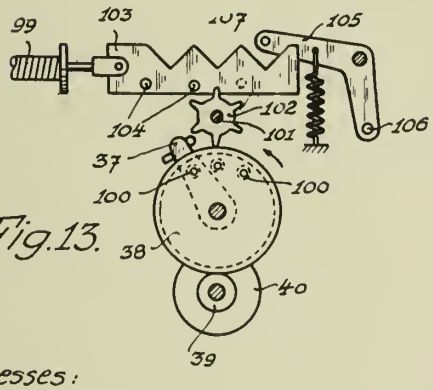

Fig. 14.

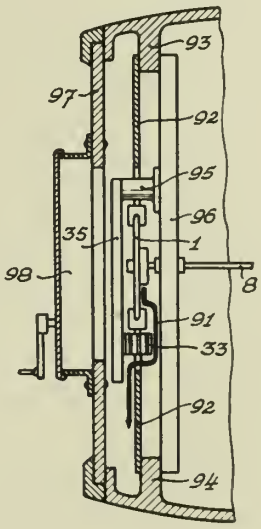

Witnesses:

Inventor:

Sándor Tóth

Published May 25, 1943

Serial No. 292,382

ALIEN PROPERTY CUSTODIAN

METHOD OF AND APPARATUS FOR THE CONTINUOUS PURIFICATION OF SUSPENSIONS OR SLUDGES, ESPECIALLY OF FIBROUS PULPS OF THE PAPER INDUSTRY

Helmuth Banning, Duren, Germany; vested in the Alien Property Custodian

Application filed August 29, 1939

This invention relates to a method of, and apparatus for, the continuous purification of suspensions or sludges, especially of fibrous pulps of the paper industry, by means of a centrifugal apparatus having a fixed outer wall guiding the pulp. The invention aims at a centrifugal method which is not interrupted by a periodical emptying out of the heavy particles accumulated in the centrifugal spaces.

In the case of the known types of centrifugal apparatus a compacted firm cushion of fibres is formed at the closed wall of the rotary centrifugal drum, and the heavy contaminations accumulate in and on that cushion. This is disadvantageous in that the centrifugal drum becomes after a certain period of operation, filled with these retained particles of dirt, whereupon the apparatus has to be stopped for cleaning purposes.

Centrifugal machines are also known which act as centrifugal sorting machines, the suspension of pulp being forced through a rapidly rotating perforated drum. In the case of these sorting machines, the contaminations are only sorted out according to the widths of the perforations of the perforated drum. Contaminations are retained in front of the sieve (considered in the direction of the current) while the fine fibres pass through it. The apparatus of these known machines is due to the fact that the sieves are very liable to clogging.

Centrifugal machines also acting as centrifugal sorting machines are also known, where the pulp and the contaminations of greater specific gravity pass through a rapidly rotating drum sieve to a chamber outside the drum. In such cases, the contaminations are mainly separated out by gravity in a casing which is conically widened in the direction towards the outlet. Thus, the outer chamber of the centrifugal machine contains the contaminations as well as the pulp to be purified, the two being not spacially separated. The drum sieve only serves the purpose of retaining contaminations of greater dimensions. As the contaminations and the pulp to be purified are present side by side, it cannot be avoided that contaminations get into the outlet for the pulp to be purified.

In order to avoid these disadvantages, it is, according to the invention, proposed to produce in a fixed casing a centrifugal field of force, comprising inner and outer zones, by means of a drum provided with apertures, the zones being separated by the wall of the drum. The contaminations of greater and lesser specific gravity contained in the suspensions, and the latter, are passed through the interior of the drum in axial direction, and the contaminations of greater specific gravity are allowed to pass through the apertures in the drum to the outside. In this connection it is convenient to keep in an axial movement the suspension which has passed to the outside and which contains the heavy contaminations.

In order to prevent contaminations from returning from the outer space into the inner space of the drum, and in order that the purified pulp and the contaminations are forced out of the casing, a super-pressure is conveniently maintained in the inner spaces of the zones.

As the spaces for the pulp to be purified and those for the contaminations to be separated therefrom are, to a large extent, separated from each other in the process according to the invention, and in contradistinction to the known processes, a particularly effective separation of the pulp to be purified and of the contaminations is obtained in a continuous operation. The purified pulp may be passed on for further use without being subjected to any further purifying operation. When purifying a suspension of paper pulp, the purified pulp may, for example, be passed on direct to the paper machine.

In the apparatus for carrying out the process according to the invention, the sludge or pulp suspension to be purified is introduced near the shaft into a fixed centrifugal casing which is closed on all sides. A drum perforated in some places rotates with high speed inside the centrifugal casing, imparts rotation to the pulp and divides the centrifugal space into two separate centrifugal zones. The suspension to be purified enters the inner centrifugal zone through an aperture in the end wall of the casing and leaves it, purified, at the other end. The contaminations pass through the apertures in the centrifugal drum and collect in a suspension of pulp at the wall of the outer casing, which suspension is also subjected to the centrifugal effect and becomes more and more dense towards the outer side. The contaminations are directly withdrawn from the outer centrifugal zone either continuously or periodically.

Sedimentation along the drum in the inner centrifugal zone may, in the case of the apparatus according to the invention, be repeatedly interrupted by substantially radial surfaces which deflect the current of pulp either towards the inside or towards the outside, thereby facilitating the separation of the contaminations. The contaminations are retained by the surfaces, in front of which the passage apertures in the drum are preferably arranged. The contaminations pass through these apertures into the outer zone. Sedimentation in the outer zone may also be effected in separate steps, the heavy substances being collected at the wall of the centrifugal body, perhaps by ribs or shoulders, from where they are led off separately.

The whole length of the two centrifugal zones

is fully utilized for purifying, the pulp in the inner zone being quickly accelerated to the rotational speed of the drum by means such as a pump, and, after purification, being removed from the centrifugal machine at once. As a further modification of the centrifugal machine, the outer wall thereof may, for example, be given a special conical shape so as to increase the percentage of contaminations in the pulp at the point of withdrawal. Similarly, a definite control of the centrifuging and of the sedimenting operations and of the withdrawal of the contaminations may be effected by providing inside the centrifugal space a circuit from the inner to the outer zone and back to the inlet side.

In the drawings, a number of embodiments of apparatus according to the invention are diagrammatically shown by way of example.

Fig. 1 is a vertical, longitudinal section of a centrifugal machine,

Figs. 2 and 3 are side views of centrifugal machines having modified casings,

Figs. 4 and 5 are vertical, longitudinal sections of centrifugal machines with different means for guiding the pulp,

Fig. 6 is a vertical, longitudinal section of a different embodiment of a centrifugal machine,

Fig. 7 is a cross-section of a centrifugal drum, and

Fig. 8 is a view of an end face of a centrifugal drum.

The centrifugal machine consists, for example, of a cylindrical casing 1, at one end face 2 of which the suspension is admitted through a curved tube fitting 3. The suspension leaves through the curved tube fitting 5 at the opposite end wall 4. The centrifugal shaft 6 is situated inside the casing, has its bearings outside thereof, and is rapidly rotated by means of a suitable drive. Inside the fixed centrifugal casing, the shaft carries the displacement body 7 and, by means of radial arms 8, the perforated centrifugal drum 9. For the purpose of accelerating the pulp admitted through the tube fitting 3, the arms at the front end of the displacement body 7 are shaped to form vanes 10.

It is convenient to provide at the end of the rotary centrifugal drum 9, connected either with the centrifugal drum itself, or with the casing 1, an annullar shoulder, or to arrange the outlet for the pulp in such a manner, that the inner width of the pulp outlet aperture of the casing is smaller than the internal diameter of the rotary centrifugal drum. In the case of such an arrangement, a zone of reduced axial speed of flow forms in the inner space of the centrifugal drum near its wall, and the dirt particles to be separated out come to rest in that zone and can be forced radially to the outside. The inlet aperture leading into the inner space of the casing is of a smaller cross-section than the outlet aperture in order to utilize for the further movement of the pulp the excess pressure of the pulp which is being discharged and the kinetic energy imparted to the pulp.

Fitted to the outer wall of the casing is a tube 11 for the withdrawal of the suspension accumulated inside the wall, which suspension contains the particles of dirt. Withdrawal can either be effected continuously in small quantities, or the aperture is opened periodically as soon as considerable quantities of dirt have accumulated inside the outer wall.

The displacement body 7, which may be rotary or fixed, forces the admitted pulp, which moves along the shaft, to flow outward, where rives in the zone of influence of the rota trifugal drum 9 and is also rotated. Th of pulp following it forces it along the d ing a perforated wall, so that it fills the ternal space of the closed casing 1 of trifugal machine. While the pulp passe the centrifugal zone along the wall of which may, for example, be perforate crease in the density of the suspension the direction towards the outer wall, increase is limited when eddying curr the fixed wall prevent further densificat heavy contaminations contained in th of pulp are separated through the ape the wall of the drum and collect in th sion contained between the fixed wall rotating wall of the drum. The purifie the other hand, flows along the inner w perforated drum to the other end of t casing and leaves through an opening i wall.

It is advantageous to accelerate the pulp initially, by a radial system 10 of the circumferential speed of the rota forated drum, or nearly to that speed. parts to the pulp the required circum speed already at the front end of the drum, so that the whole length of the la be utilized for the separation of the he ticles. The fixed casing may be so co that the dirt separated out collects mos vicinity of the connecting fittings of th According to Fig. 2, the outer shell of t 31 is constructed conically, and the t connected at a point where the diamet cone is the greatest, and where the pa dirt mainly collect. The perforated may also be constructed conically.

It is advantageous to have the outer w casing widening in the direction towards and not in the direction towards the order to keep the collecting point of th far as possible from the outlet *d* for th pulp.

Fig. 3 shows a centrifugal machine of having an outer shell 32 set off in step 11 are connected to each end of a step. of a cylindrical outer shell, an outer sh conical steps of any other type may als ployed (Fig. 5). A further improveme purifying process is obtained by arrangi lar shoulders 12 inside the rotating dr of rings 14 inside the fixed outer shel shown in Fig. 1. There, the displacem 37 carries rings 13, and the rotating carries annular shoulders 12 projecting the inside, the pulp being alternatingly to the inside and to the outside by the these parts. The pulp flowing along is up or obstructed by these rings, whereby flow of the pulp is caused in these p also eddying currents at the edge of t This favours a deposition of the dirt in the rings and the passing thereof thr holes in the drum.

The rings 12 are conveniently arrange en conically in the direction of the a so that heavy particles may deposit be rings, being separated out of the pulp over the edges of the rings.

It is also advantageous to sub-divide centrifugal zone by annular shoulders der to prevent a movement of the dirt outer wall towards the outlet of the puri

The largest dirt particles will deposit in the first section of the outer centrifugal zone, and comparatively small proportions of dirt will be washed through the pipes 11 of the sections gradually nearing the outlet. The provision of the rings 12—14 results in that the dirt is thrown back into the preceding zone in which it was separated out, so that dirt, once it has been separated out, can no longer reach the outlet end of the centrifugal machine.

According to Fig. 5 the portions of the fixed casing 1 form conical sub-divisions. In order to obtain the advantages described above, the cones forming the casing widen in the direction towards the outlet for the purified pulp and are connected with the adjoining conical portion by radially disposed surfaces. The tubes 11 are attached at the bottom of the centrifugal machine in front of the respective radial surfaces. Radial ribs 15 are conveniently provided on the outer shell of the centrifugal drum 36, deflecting towards the outer wall the heavy particles separated out in the outer zone. In order to enhance the passage of the heavy particles through the drum, the axis of rotation of the drum may be slightly eccentrically arranged relatively to the casing so that reductions and increases of pressure alternate at the circumference of the drum.

According to Fig. 5, the inlet side of the displacement drum 35 is constructed as a rotor 34 of a pump. A different system of guiding the pulp in the inner zone of the centrifugal drum 36 is obtained by an alternating arrangement of radial partition walls 16 between the drum 36 and the displacement body 35. Openings 17 are provided in the partition walls and are alternatingly disposed near the drum and near the displacement body, or half way between the two, whereby passages for the pulp are formed at different distances from the axis of rotation. This results in that even the finest contaminations are separated out, the specific gravity of which approximates that of the pulp fibres.

Fig. 6 shows a construction of the casing 31 having a helical inlet 18 for the pulp and a helical outlet 19 for the pulp. This permits a utilisation of the kinetic energy of the pulp as admitted, in order to impart a rotary movement to the admitted pulp, whereby a saving in energy is obtained. Constructing the outlet portion spirally permits achieving a higher outlet pressure. In the case of this embodiment, the casing 33 is, for example, conically widened in the direction towards the inlet, slightly first and more later, whereby an annular pocket 20 is formed from which the dirty pulp is withdrawn. A conical tube 21 surrounding the shaft is provided for the retention of the light constituents. That tube receives the light contaminations which, in view of the centrifugal force, move towards the shaft, so that they may be withdrawn through the pipe 22.

The construction of the rotary perforated drum 9 may also vary, depending on the type of suspension to be purified. For the separation of finer contaminations it is sufficient to use a shell perforated by fine holes, while larger perforations are provided for the purification of pulp having coarser contaminations.

When purifying pulp containing a small proportion of contaminations, it suffices to provide the perforated drum with a rotating row of holes of a suitable diameter closely in front of the rings 23 projecting inwardly in the drum. A suitable embodiment is also obtained if the drum is provided on the inside or on the outside with ribs extending in the direction of the axis, and if circularly closed slots or else interrupted slots are milled in the shell of the drum.

A convenient embodiment of a centrifugal drum is shown in Fig. 7. Rings 24 serving for the retention of the contaminations of the suspension carry ribs 25 which extend axially and leave between each other slots through which the heavy particles pass.

An undesired circulation of the pulp from the outer to the inner centrifugal zone, particularly at the outlet end of the rotating drum is prevented thereby that the rotating drum 29 is provided at its end with annular rings 26 which are opposed by inwardly extended flanges of the casing 33.

Fig. 8. Channels 27 are provided in the outer surfaces of the annular shoulders 26, or corresponding ribs are attached thereto, their direction being approximately radial. By means of a suitable width of these rings, it is possible to produce a suitable current between the flange of the casing 33 and the rotating annular shoulder 26, which forces the purified pulp from the inner zone into the outer zone so that separated particles of dirt are safely prevented from passing from the outside to the inside into the purified pulp.

The passing of dirt through the drum, and an improvement in the purification of sorted pulp, or an increase in the output, is obtained by a pipe-connection 28 (Fig. 6) between the outer zone and the pulp inlet, through which pipe connection a certain proportion of partly purified pulp is continuously withdrawn from the outer part of the casing and supplied back to the inlet. In this connection it is convenient to withdraw that quantity of pulp not at the outer circumference of the casing, where the greatest proportion of dirt collects, but at a point somewhat nearer to the axis.

On the other hand, it is also possible to withdraw continuous current of pulp at a point of the outer centrifugal casing, and to purify it in a second apparatus, the purified pulp being either supplied to the inlet of the first centrifugal machine or passed into manufacture as purified pulp. In the case of large plant it is also possible to arrange a number of centrifugal machines side by side, and to serve them, if desired, by a common supplementary centrifugal machine or other purifying device.

A further mode of procedure is characterized by the supply of water under pressure to the outer purifying zone of the centrifugal machine. By means of such water, the separated heavy particles may be washed to free them from good pulp, thereby reducing the proportion of pulp leaving the centrifugal machine along with the heavy material. The centrifugal process according to the invention is suitable not only for the purification of fibrous material, but also for sludges of all kinds, e. g. for the purification of kaolin.

HELMUTH BANNING.

PUBLISHED

MAY 25, 1943.

BY A. P. C.

H. BANNING

METHOD OF AND APPARATUS FOR THE CONTINUOUS PURIFICATION OF SUSPENSIONS OR SLUDGES, ESPECIALLY OF FIBROUS PULPS OF THE PAPER INDUSTRY

Filed Aug. 29, 1939

Serial No. 292,382

2 Sheets-Sheet 1

Fig.1

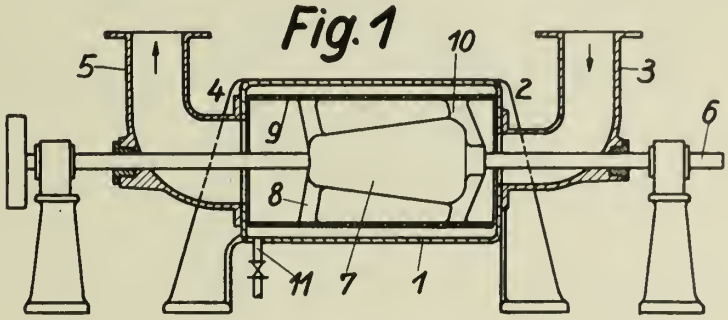

Fig.2

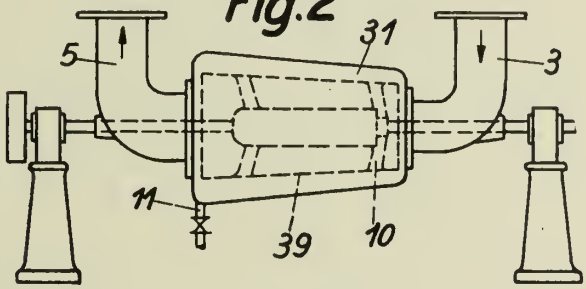

Fig.3

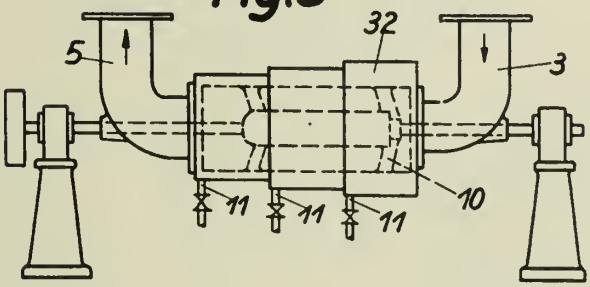

Inventor

A. C. Bierman

PUBLISHED

MAY 25, 1943.

BY A. P. C.

H. BANNING

METHOD OF AND APPARATUS FOR THE CONTINUOUS PURIFICATION OF SUSPENSIONS OR SLUDGES, ESPECIALLY OF FIBROUS PULPS OF THE PAPER INDUSTRY

Filed Aug. 29, 1939

Serial No. 292,382

2 Sheets-Sheet 2

Fig.4

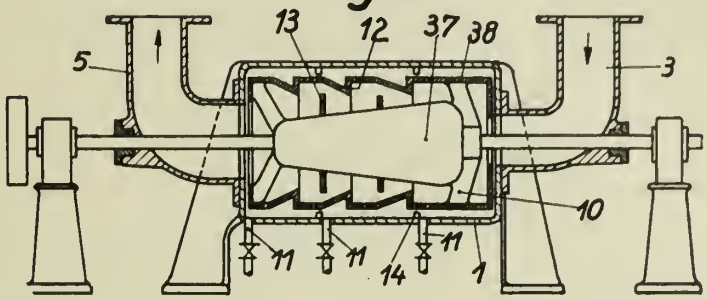

Fig.5

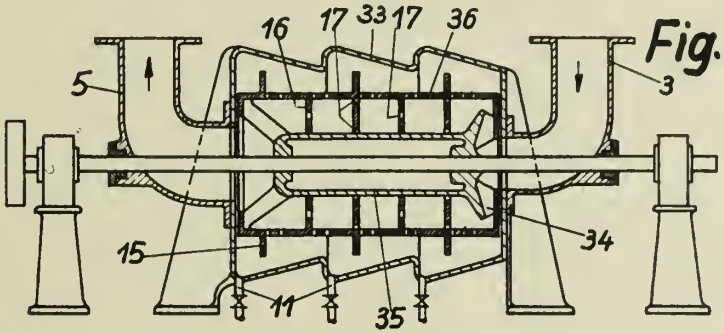

Fig.6

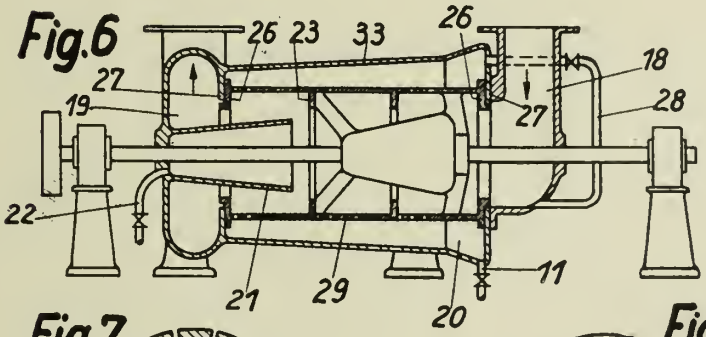

Fig.7

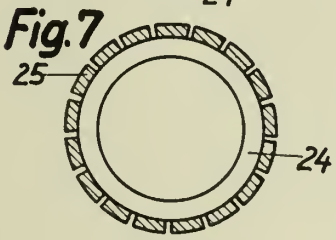

Fig.8

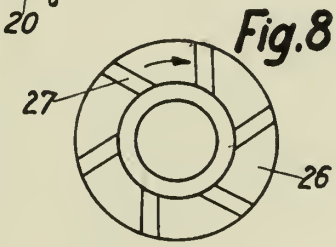

Inventor:

H. C. Banning

Published May 25, 1943

Serial No. 292,640

ALIEN PROPERTY CUSTODIAN

AUTOMATIC LOCKING DEVICE FOR UNDERCARRIAGE

Jean Mercier, Neuilly-sur-Seine, France; vested in the Alien Property Custodian

Application filed August 30, 1939

The present invention relates to a method for the automatic locking of a retractable aeroplane undercarriage, as long as the aeroplane rests upon the ground, in order that it shall be impossible for the pilot to make any improper movement which would cause an undue lifting of the undercarriage, but permitting in all cases the lowering of the undercarriage.

The invention is more specially applicable to undercarriages which are lifted by jacks, and it consists in locking the feeding conduit of the jack for the lowering, forming the discharge conduit for the lifting, by means of a valve device controlled by the compression of the elastic jointed frame of the undercarriage, by the action of the weight of the aeroplane.

The accompanying drawing gives an example of realization.

Figure 1 represents diagrammatically the locking system, with the valve device controlled by the compression of the elastic frame.

Figure 2 represents a valve system permitting to avoid the use of the clack valve shown in Figure 1.

In Figure 1, an aeroplane 1 is provided with a retractable undercarriage, whose elastic frame comprises a stationary part 2 on which is mounted, in an elastic manner not represented in the drawings, a wheel journal 3. A hydraulic jack 4, supplied by two pipes 5 and 6, controls an undercarriage. A valve 7, which is mounted in the feeding pipe 5 used for the lowering of the undercarriage, allows the fluid to circulate in the direction for the admission to the jack, but prevents the circulation in the contrary direction.

A valve device 8, which is mounted on the stationary part of the elastic frame 2, is provided with two pipes 9 and 10, which connect it with the pipe 5. 9 is connected with the pipe 5 on the lower side of the valve, and 10 is connected on the upper side. The valve device comprises a slide-valve 11 actuated by a rod 12 which is provided with a stop 13 adapted for a contact made by a stop 14 secured to the journal of the wheel 3. When the undercarriage is lowered, the aeroplane being on the ground by the action of the compression of the system 2—3, the stops 13 and 14 are not in contact, and a reaction spring 15, used with the rod 12, holds the slide-valve 11 in place, and thus the pipes 9 and 10 are not in communication. When the aeroplane starts from the ground, the system 2, 3 expands, the stop 14 makes contact with the stop 12, thus actuating the rod 12, in spite of the contrary effect of the spring 15 and thus the pipes 9 and 10 are connected together. At this time, the fluid contained in the jack finds a way for discharge through the pipes 5, 9, 10, 5, thus short-circuiting the valve 7, and this path is stopped off when the aeroplane is on the ground, which prevents, in this case, the fluid contained in the jack from being discharged, thus causing the rise of the undercarriage.

It is evident that the embodiment described is not limitative, and that other embodiments, which only differ from the aforesaid by details of construction, are also comprised within the scope of the invention. Thus, instead of controlling the valve device by mechanical means, use may be made of an electro-mechanical device, an electric contact being closed for instance by the effect of compression of the elastic jointed frame, thus closing the operating circuit of a valve device.

Moreover, it is not always necessary, and this will depend upon the use in question, to provide an anti-return valve. In the above described embodiment, this valve only serves to prevent the discharge of the fluid from the jack, when in the lowered position, while permitting the admission of this fluid for the lowering, even in the case in which, for any reason, the valve 8 should remain in the closed position, which it should not have except when the jack is expanded and the aeroplane is on the ground.

It is further possible to conceive, for instance, a device as shown in Figure 2, in which the clack-valve and the valve device are combined in a single apparatus. In this embodiment, the combined apparatus comprises a body 16 in which is formed a chamber 17 communicating on the one hand with a pipe 18 (corresponding to the pipe 5 of Fig. 1, located between the clack-valve 7 and the jack) and on the other hand with a pipe 19 (corresponding to the part of the pipe 5 situated between the clack-valve and the distributor of fluid, in Fig. 1), a ball 20 controlled by a spring 21 is placed between the pipes 18 and 19. A rod 22, brought back by a spring 23, can impel the ball, by the action of a lever 24, operated by the movement of compression or expansion of the undercarriage.

When the undercarriage is compressed, the lever 24 is displaced in the direction of the arrow, and the spring brings back the rod 22. The ball 20 fits upon its seating; the supply circuit of the jack is cut off in the direction from the jack to the feeder, but is always open in the direction of the feeder to the jack. On the contrary, when the undercarriage has expanded, the aeroplane

having risen from the ground, the lever **24** raises the rod **22** and drives the ball **20** against the spring, and thus the fluid contained in the jack can be discharged in the direction of the jack to the feeder, and the undercarriage can be raised. Obviously, the control which acts by means of the spring in the device herein described may also be constructed in such manner as to act positively in either direction, according to the relative position of the parts forming the elastic jointed frame.

In like manner, the relative movement of the control with reference to the fixed part of the elastic frame may be transmitted to the valve device, which is situated at any point, by ible distant control device, or the like, in case the closing device may be placed body of the jack itself, so as to prevent all of breaking a pipe. It is evident that th tem is also applicable to the case in which jacks are used for the control of an elastic ed frame.

One may also add to the valve device tarding device with dash-pot, or a rela delayed action, which permits of maint the fastening for a certain time after the plane has started up.

JEAN MERC

PUBLISHED

MAY 25, 1943.

BY A. P. C.

J. MERCIER

AUTOMATIC LOCKING DEVICE FOR UNDERCARRIAGE

Filed Aug. 30, 1939

Serial No. 292,640

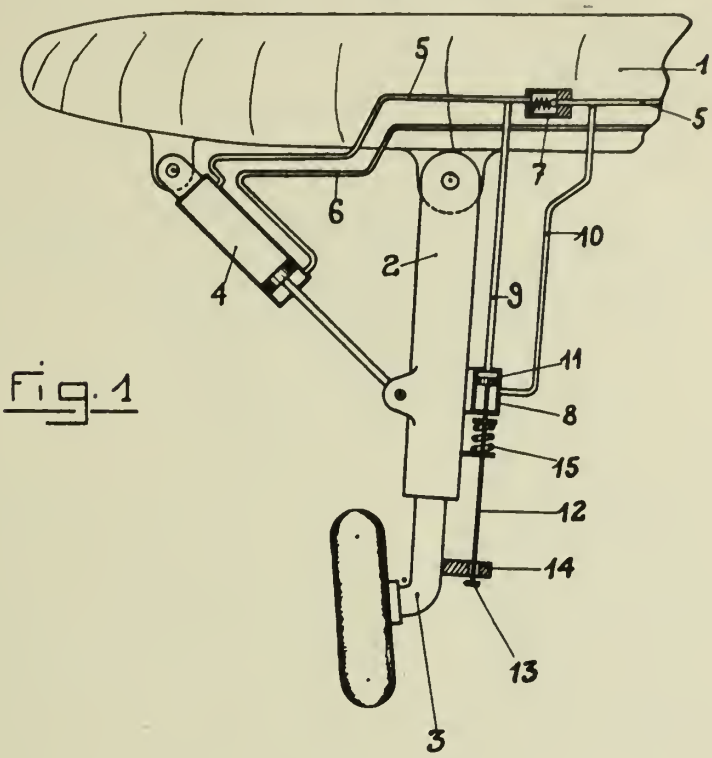

Fig. 1

Fig. 2

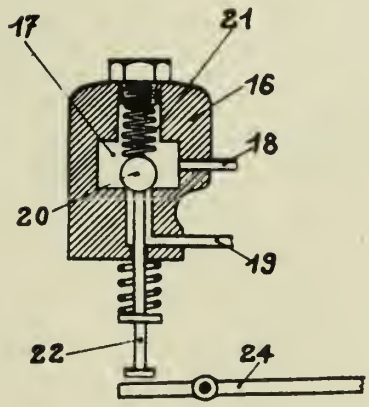

Inventor
Jean Mercier
By Mocks Blum
Attorneys

Published May 25, 1943

Serial No. 293,043

ALIEN PROPERTY CUSTODIAN

STEAM TURBINES AND MORE PARTICULARLY TO A DISC THEREFOR, PROVIDED AT BOTH SIDES WITH BLADES

Ernst Gente, Berlin-Siemensstadt, Germany; vested in the Alien Property Custodian

Application filed September 1, 1939

This invention relates to steam turbines and more particularly to a disc therefor, provided at both sides with blades.

Steam turbines with radial admission of the working fluid, i. e. a particular type of centrifugal machines have been already proposed in which the blade rims are arranged on a disc provided with blades at one side thereof and which has such a thickness as to behave as a substantially rigid body with respect to the shearing stresses to which the disc is subjected. Also an elastic disc of a very small thickness resistant to shearing and which may be provided at one or both sides with blades is well known in the art. In the case of a blading at both sides of the disc, webs which deform approximately in the form of an S as a result of the shearing forces acting thereon are provided between the blade rings disposed at both sides of the disc, irrespective of whether the blade rings are arranged in staggered relation or not. The deformation may, however, be considerably reduced by arranging the blade rings disposed at both sides of the disc in stepped relation in such a manner that the outer diameter of the ring at one side is equal to the inner diameter of the following ring of the other side. In this manner the webs are eliminated and the disc becomes more rigid.

The essence of the present invention consists in the fact that the staggered blade rings overlap one another an amount which is the greater, the higher the stress will be. In this manner a disc is obtained whose cross-section has substantially the form of a cone.

In order that the invention may be more readily understood, one embodiment thereof will now be described with reference to the accompanying drawing.

The blade rings R_1 arranged on the one side and the blade rings R_2 on the other side are machined from the material of the disc S. The disc to which the working fluid is admitted at both sides thereof is naturally stressed to a greater extent at root than at the outer periphery. In order to take this fact into consideration the disc is designed according to the invention in the following manner: The blade ring R_1 and the blade ring R_2 overlap each other by an amount s_a. This amount of overlap is not constant throughout the entire diameter of the disc but increases with increasing stress, so that the greatest stress is taken up by the overlap s_1. In this manner a new disc type is obtained which is neither a rigid disc nor an elastic disc resistant to shearing.

The amount by which the overlap is to be increased is a matter to be judged by the designer in accordance with the permissible values of the strength of the material under consideration.

ERNST GENTE.

PUBLISHED

MAY 25, 1943.

BY A. P. C.

E. GENTE

STEAM TURBINES AND MORE PARTICULARLY TO A DISC THEREFOR, PROVIDED AT BOTH SIDES WITH BLADES

Filed Sept. 1, 1939

Serial No. 293,043

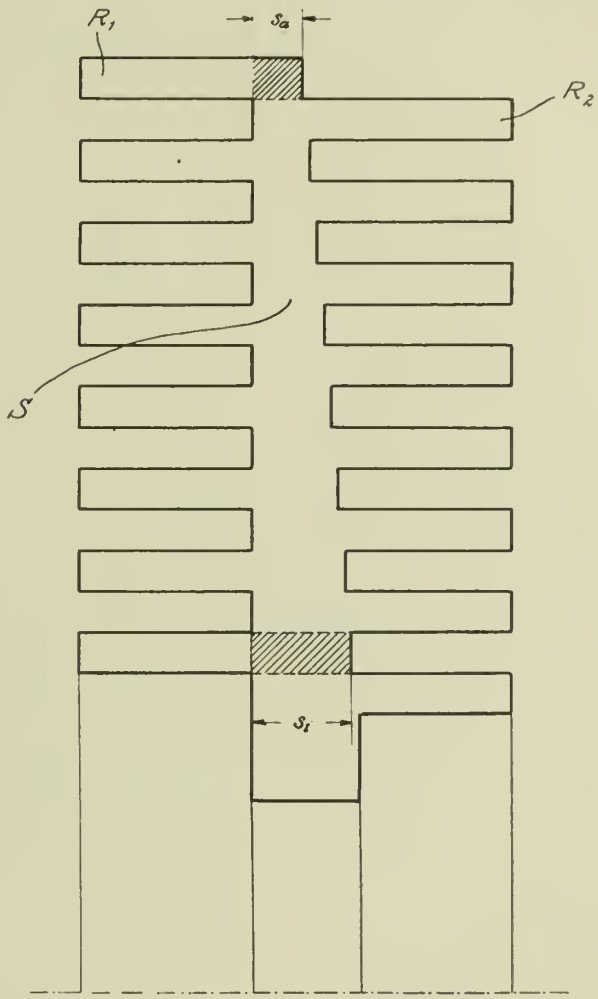

Inventor:
Ernst Gente
By: Richardson and Geier
Attys.

Published May 25, 1943

Serial No. 293,149

ALIEN PROPERTY CUSTODIAN

PIPE JOINT PACKING MEANS

Pierre Boissou, Pont a Mousson, Meurthe et Moselle, France; vested in the Alien Property Custodian

Application filed September 2, 1939

It is a matter of known practice to utilize, for the assembling of pipes used for conduits and consisting of cast-iron, reinforced concrete or other material and containing a fluid under pressure, automatic packing members having such form that their fluid-tight contact with each of the parts to be assembled will be assured by the pressure of this fluid itself. Such packing members usually comprise a groove (or cavity) which is turned towards the interior of the pipe and in which the pressure is exerted, said groove being situated between two tongues which are thus applied against the walls of each of the pipes to be assembled.

The present invention consists of an improved packing member of this type, which is characterized by the fact that the surfaces of contact between the packing member and the pipes have their generatrices substantially parallel to the longitudinal axis of the piping.

Owing to this arrangement, the position of the contact surfaces is not substantially modified by relative angular and longitudinal displacements of the two pipes, so that the fluid-tightness is not affected by such relative displacements.

According to a further feature, the packing member comprises a solid part which succeeds the said tongues and whose flattening when the pipes are assembled will cooperate with said tongues to ensure a perfect sealing.

The invention further consists of a pipe adapted for the use of the said packing member, said pipe being characterized by the fact that it is provided at one end at least with a groove or recess adapted to accommodate said packing member.

According to a further feature, the end of the pipe which cooperates with the end having the groove adapted to receive the packing member is slightly tapered or spherical, or of like form, in such a way that when the two pipes are fitted together, it will cause a radial flattening of the said packing piece.

Further features will be set forth in the following description.

In the accompanying drawings, which are given solely by way of example:

Fig. 1 shows an assemblage according to the invention, with parts broken away.

Fig. 2 is a partial section of the packing member on a larger scale.

Fig. 3 is a section of a packing member mounted between two pipes whose longitudinal axes are disposed at a certain angle.

Figs. 4 to 9 are longitudinal radial sections of modified forms of packing members according to the invention.

Fig. 10 shows the assemblage of two pipes by means of a sleeve.

In the embodiment shown in Figs. 1 to 3, the invention is applied to the assemblage of two pipes **1** and **2**. The said pipes may be made in one piece, for instance of cast-iron, steel, concrete or any other material; they may also consist, for example, of plain or reinforced concrete, provided or not with a winding for transverse reinforcement and/or with metal end members. Each of these pipes has a spigot end **3** and a bell **4** whose inner surface **5** is slightly tapered and flaring. The spigot end **3** comprises, in a projecting part a recess or groove **6** whose bottom part may be tapered, as illustrated, or cylindrical or of any other shape. In the said groove **6** is located a ring **7** which forms a packing member. It comprises a channel **8** (Fig. 2) facing the inner end of the bell **4**, and forming two tongues **9** and **10** adapted to make a fluid-tight contact with the tapered inner surface **5** of the bell **4** and with the bottom of the groove **6**, respectively. At the rear of the tongues, the packing member is continued by a solid part of a relatively great length.

The packing member **7**, according to the nature and the pressure of the fluid to be conveyed, may consist of solid rubber, or of canvas-backed or reinforced rubber. Its outer surface may be separated from the said fluid by a protecting layer of lead, synthetic resin, or any other suitable material. For certain particular purposes, use can be made of rings of any other plastic material, such as asbestos, graphite-asbestos, copper, lead, etc.

Preferably, the said packing member bears against the lateral walls **11** and **12** of the groove **6**, and will thus be held in the longitudinal direction.

In the free state, that is, before the assembling, the packing member **7** has an inner diameter which is slightly less than the diameter of the bottom of the groove **6**, so that the packing member will be applied upon this bottom when mounted thereon. Moreover, the radial thickness of the packing member is somewhat greater than that of the annular space between the two pipes which is adapted to accommodate the packing member. Therefore, when the two pipes are assembled by bell and spigot fitting owing on the one hand to the tapered surface **5** of the bell **4**, and on the other hand to the provision of the lateral abutments **11** and **12**, the solid part of the packing member **7** will be radially flattened,

This solid part thus aids in the fluid-tightness before the piping is filled and is subjected to pressure, which pressure has the effect of applying, in the known manner, the tongues or lips **9** and **10** against the corresponding walls of the two pipes, with a force which is greater according as this pressure is greater. This affords an immediate fluid-tightness which is more complete than with known automatic joints, particularly at the time of the filling of the piping, which is thus facilitated, and at the time of emptying the piping there will be no danger of infiltration from the exterior.

The packing member according to the invention is readily adapted, without prejudice to the fluid-tightness, to considerable relative longitudinal and/or angular displacements of the pipes, as shown in Fig. 3, in which the axes of the pipes form an angle x. In fact, on the one hand, the relatively considerable longitudinal displacements will cause but a slight variation of the radial thickness of the operative part of the recess **5**, owing to its small taper, and on the other hand, the angular displacements will not cause any substantial variation of this thickness. This advantage is particularly important for piping buried in the ground, which is subject to settlings or displacements of the ground, and further, for piping which is subject to considerable variations of temperature as the expansions and contractions have no effect upon the fluid-tightness of the joint.

In addition to the aforesaid advantages for the filling and bleeding of the piping, the packing member according to the invention is quite superior to the automatic joints hitherto employed which only preserve their fluid-tightness provided that the adjacent pipes are not subject to any substantial relative movement.

Moreover, the packing member according to the invention is much simpler and more economical than the known non-automatic joints which require the use of special members for the compression of a packing ring.

Furthermore, the form of the groove **6** which is closed on three sides, greatly facilitates the exact mounting of the packing member, the assembling of the pipes at the working ground, and thus a good preservation of the joint.

Fig. 4 shows a modification in which the pack-

ing member **7** comprises a groove or cl
on the outer side. The said groove f
tongues **14** and **15** which still further
the tightness of the joint, where the pi
be subjected in the interior to an impor
uum. Moreover, in this modification, t
6 containing the packing member is f
the wall of the pipe, which does not
a projecting part as shown in Figs. 1 to
thermore, the inner surface **5** of the b
a spherical surface, whereby still greate
deflections of the pipes are permitted.

In the modification shown in Fig. 5, t
ing member is located in a groove **1**
in the inner surface of the bell **4**. T
end **3** comprises a part **17** of tapered,
or like form, whose diameter decrease
the end, which is not grooved, and
ensure the radial compression of the
member **7** upon assembling the pipes.

The groove **6**, instead of being for
projecting part at the exterior of th
shown in Figs. 1, 2 and 3, or of being f
the wall of the pipe as shown in Figs.
may be formed between an abutment **1**
by the pipe **1**, and an abutment **18** wh
cured by hooping, as shown in Fig. 6, or
ing, screwing, etc.

In the modification shown in Fig. 7, t
6 is formed in a ring **19** which is sec
instance by welding at **20** and **21**, to th

Fig. 8 shows another modification
the abutment at the end is eliminated.

If desired, the packing member nee
provided with tongues on the outer s
ticularly in the case of piping which is
to a permanent vacuum, as shown in Fi

The packing member can be used not
straight pipes, but also for couplings a
of cocks and valves. It can even be
rings or sleeves **21** (Fig. 10) employed
assembling of two pipes **1** and **2**.

It is obvious that in all cases, each
ment may have at each end either a
a female part.

Obviously, the invention is not limite
embodiments herein described and show
are given solely by way of example.

PIERRE BO

PUBLISHED

MAY 25, 1943.

BY A. P. C.

P. BOISSOU

PIPE JOINT PACKING MEANS

Filed Sept. 2, 1939

Serial No.

293,149

2 Sheets-Sheet 1

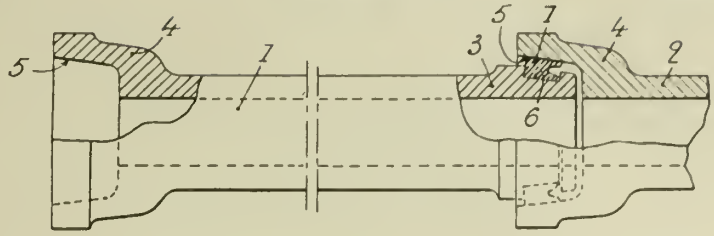

Fig. 1

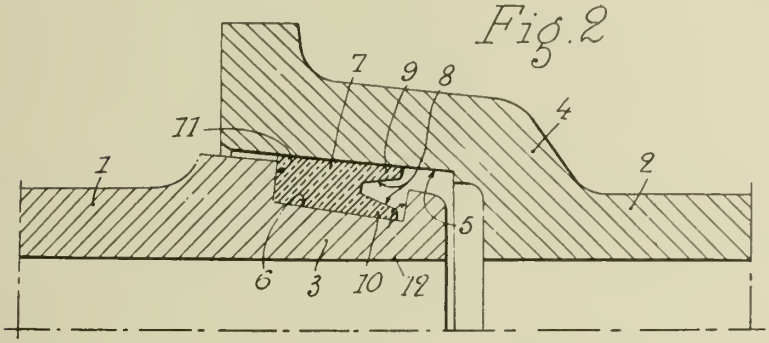

Fig. 2

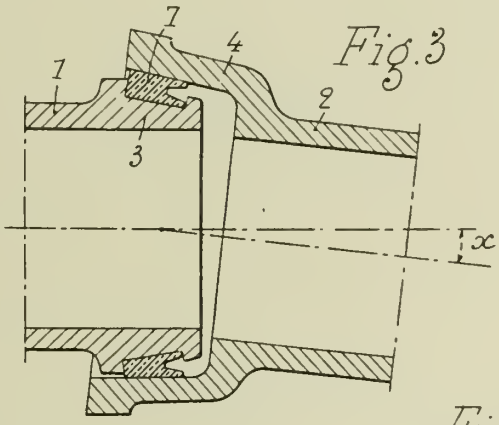

Fig. 3

Fig. 4

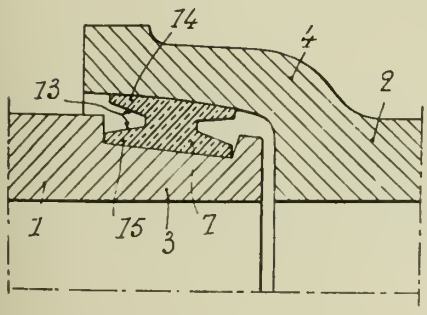

Fig. 5

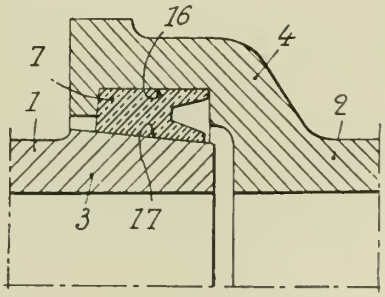

INVENTOR

Pierre Boissou

BY Stellmann

HIS ATTORNEY

PUBLISHED

MAY 25, 1943.

BY A. P. C.

P. BOISSOU

PIPE JOINT PACKING MEANS

Filed Sept. 2, 1939

Serial No.
293,149

2 Sheets-Sheet 2

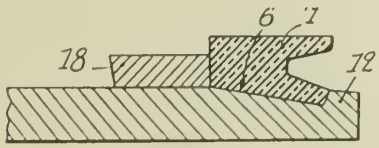

Fig. 6

Fig. 7

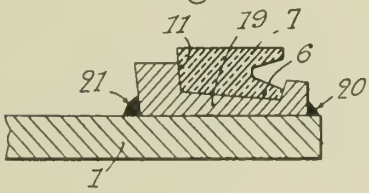

Fig. 8

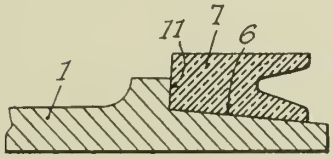

Fig. 9

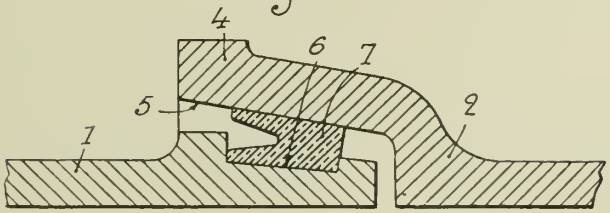

Fig. 10

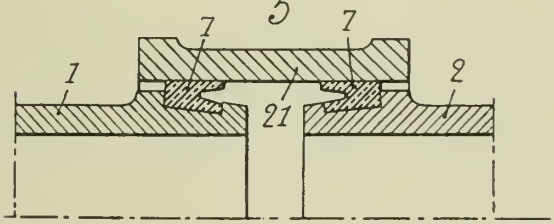

INVENTOR

Pierre Boissou

BY Otto Munk

HIS ATTORNEY

Published May 25, 1943

Serial No. 293,496

ALIEN PROPERTY CUSTODIAN

TONE ARMS

Manlio Marzetti, Milan, Italy; vested in the Alien Property Custodian

Application filed September 5, 1939

It is known that in connection with tone arms of talking machines it is useful the angle included between the particular radius line of the record disk which extends through the contact point of the scanning needle with the disk record groove surface and the line being the orthogonal projection of the axis of the scanning needle on said record disk, is 90° or so close to 90° as possible, and further it is useful that during the scanning of a record said angle undergoes a so little variation as possible along the passage of the scanning disk from the outermost groove of the disk record to the innermost groove thereof.

Having in mind that due to practical requirements the tone arm must be pivoted at a point close to the record disk for its angular motion across the record disk in the period a record is scanned, the above defined angle necessarily undergoes a variation during the scanning motion of the tone arm; to minimize such an objectionable variation, tone arms have been suggested in which the orthogonal projection of the scanning needle axis on the record disk is inclined to a large angle with respect to the plane extending through the vertical axis the tone arm turns about during the record scanning operation and through the point where said scanning needle contacts with the record groove surface.

The conditions so arising cause the tone arm to be non-symmetrical and accordingly it is subject to unbalanced vibrations under the action of the needle oscillations, said vibrations including high-order harmonics which affect the tone arm performance.

This invention has for its object a tone arm for talking machines in which the orthogonal projection of the scanning needle on the record disk may extend at any desired angle with respect to the plane extending through the rotary axis of the tone arm and the contact point of the needle with the record groove surface, said tone arm being on the other hand made symmetrical with respect to the plane perpendicular to the record disk in which the needle axis lies, and further said first named plane is perpendicular to the horizontal axis about which said tone arm is mounted to oscillate for its vertical movements with respect to the record disk.

The tone arm of this invention still has the advantage that it requires a reduced space.

A tone arm according to this invention is shown on the annexed drawing and

Fig. 1 is a plan view thereof,

Fig. 2 is a fragmentary section on line 2—2 of Fig. 1, and

Fig. 3 is a section on line 3—3 of Fig. 1.

In the illustrated embodiment the tone arm 1, which includes pick-up means of any preferred and well known construction, includes a horizontal arm 1 mounted to rotate on the board plate 4 of a talking machine case not shown, by means of a spindle 2 fast with said arm 1 and a bearing 3 fast to said board plate 4 at a point adjacent tothe periphery of the record carrying turn plate 5, this turn plate 5 being rotatable around its centre 0 and being driven by a motor not shown, as conventional.

An upright 6 is fast on the end of the arm 1 and a fork member 7 is fast on the top of said upright 6; the fork member 7 carries a horizontal pivot pin 8 whose axis lies in a direction substantially parallel with the arm 1. The tone arm 9 is mounted to oscillate on the pivot pin 8 and the longitudinal axis x—x of the tone arm 9 extends substantially perpendicular to the axis of pivot 8; said tone arm 9 carries a scanning needle 10 at its free end and has a configuration which is entirely symmetrical with respect to a plane perpendicular to the turn plate 5 and extending through said longitudinal axis x—x of the tone arm 9 and having the axis of the scanning needle 10 lying therein.

Owing to the described arrangement, the axes of the spindle 2 and pivot pin 8 have an invariable respective position and the distance intermediate the longitudinal axis of the arm 9 and the axis of spindle 2 is comparatively large.

The longitudinal axis x—x of the tone arm 9 and the vertical axis of the spindle 2 may be said to be askew to each other in the meaning that said axes are not parallel with nor intersect each other.

During the scanning of a record located on and driven by the turn table 5, the tone arm 9 whose pivot pin 8 is fast with the arm 1, rotates around the vertical axis of the spindle 2 and the orthogonal projection of the scanning needle axis on the record disk and turn table (which coincides with axis x—x in Fig. 1) is held at an angle which is substantially constant with respect to the record disk radius line which extends through the point of contact of the scanning needle with the record disk groove.

The above stated condition, combined with the condition that the tone arm 9 is symmetrical with respect to the plane in which the axis of the scanning needle lies and which is perpendicular to the record disk, and with the further condition that the vertical oscillations of said tone arm occur about the axis of the pivot pin 8 which is perpen-

dicular to the plane of symmetry of the arm **9**, secures the above suggested conditions of operation.

The arm **1** may be located below the plate board **4** of the talking machine case, said board being in turn below the turn plate **5**; for such a purpose the plate board **4** is provided with an arc-shaped slot, having its centre on the a spindle **2** to enable the upright **6** to exten the base board **4** and to oscillate about of the spindle **2**, the pivotal means **2**, **3** depending from the base board **4**.

MANLIO MAR

PUBLISHED

MAY 25, 1943.

BY A. P. C.

M. MARZETTI

TONE ARMS

Filed Sept. 5, 1939

Serial No.
293,496

Fig. 1

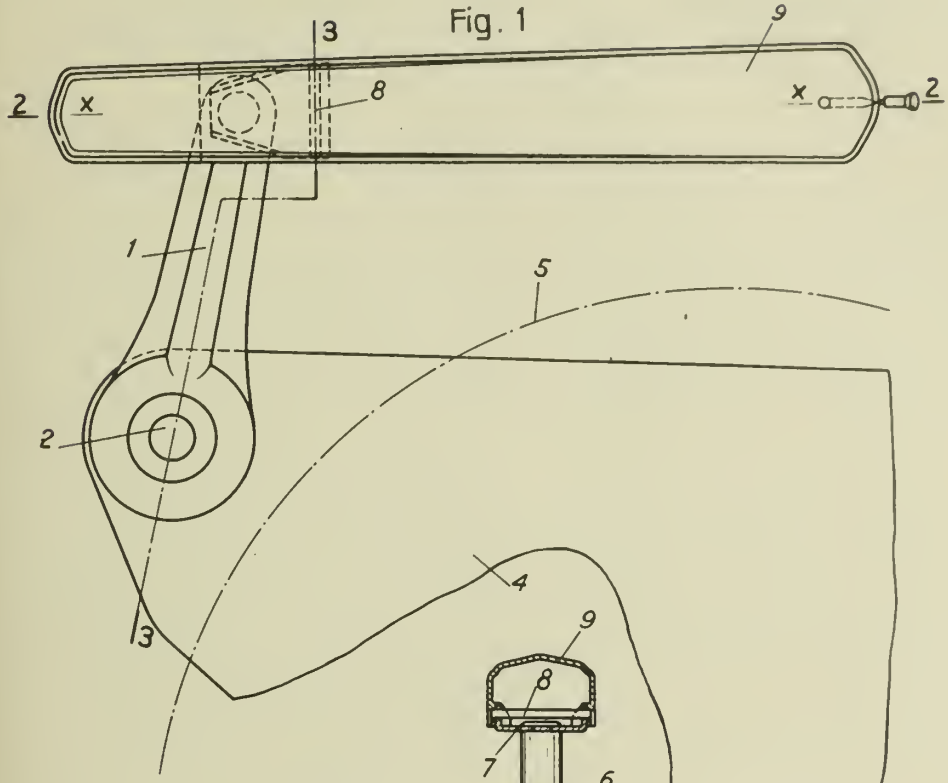

Fig. 3

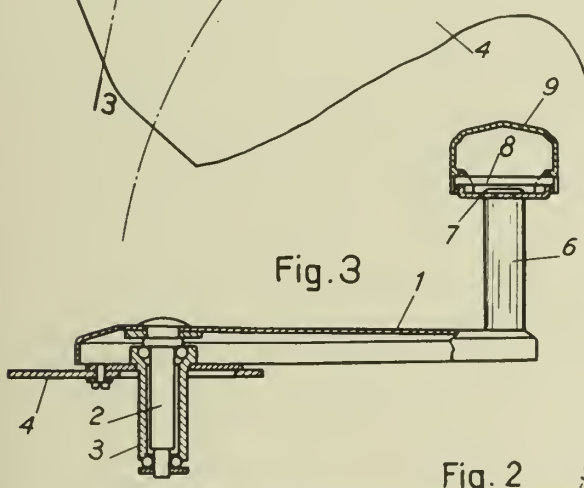

Fig. 2

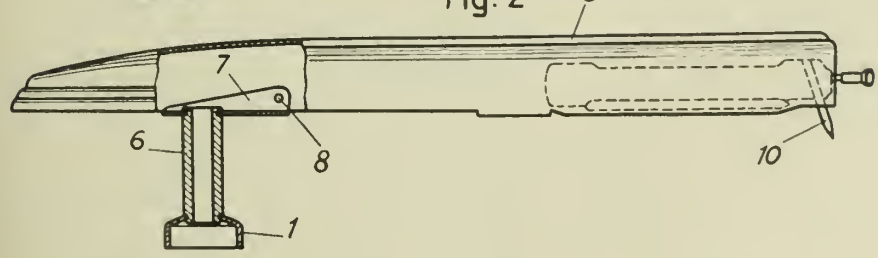

Inventor:
M. Marzetti,
By E. F. Wenderoth Atty

Published May 25, 1943

Serial No. 294,520

ALIEN PROPERTY CUSTODIAN

VEHICLE SPRINGING

Josef Müller, Stuttgart, Germany; vested in the Alien Property Custodian

Application filed September 12, 1939

This invention relates to the springing of a rigid axle, more particularly the rear axle of a motor vehicle, which is supported with reference to the frame by a strut or radius rod arrangement in such manner that it can pivot with respect to the frame against the action of helical springs, not only about a central longitudinal axis but also about a transverse axis determined by the pivotal attachment of the strut or radius rod arrangement to the frame.

In the known springing arrangements, the springs constructed as displacement springs, e. g. helical springs were arranged exclusively or at least in part on the side of the axle remote from the point of pivotal attachment of the struts or radius rods to the frame. In contradistinction thereto the invention provides such an arrangement of the helical springs—more particularly a single spring for each wheel side—that they are disposed exclusively on the same side of the straight line passing through the centres of the wheels as the point of pivotal attachment of the strut arrangement to the frame, and preferably they are disposed close to the wheels.

Such an arrangement has the important advantage—apart from the structural advantage that the space on the other side of the axle is not occupied by the helical springs and consequently can be used for other purposes—that the springing can be adapted to desired circumstances in the particularly effective manner, above all in such manner that the vehicle has an increased stability on curves.

In the annexed drawing, the rear axle of a motor vehicle is shown diagrammatically in plan view in Figure 1 and in side view in Figure 2.

The road wheels R are arranged on a rear axle H which is supported forwardly with respect to the frame by means of struts or radius rods S which are connected with the axle, to form a triangle for example. The strut arrangement is pivotally connected to the frame by a ball joint O. Further the axle can be supported against lateral displacement relatively to the frame, in that for example the axle is guided by a joint G guided vertically with respect to the frame. This guidance may be effected by elastic rollers travelling in a vertical guideway arranged in the longitudinal central plane of the vehicle, or by a pair of links or similar means, in such manner that the axle can execute simultaneously on up and down movement about the axis A—A and a pivotal movement about a central longitudinal axis B—B. The springing is effected by helical springs in the example illustrated. For comparison purposes, spring positions in accordance with the invention are shown at F_2, or F_3, and a known spring position is shown at F_1.

With similarly directed equal displacements of the wheels about the axis A—A, any spring F or its spring power P will exercise against pivotal movement of the axle a restoring moment $M_A = P.a$, which is assumed to be the same in all cases for the same displacement of the wheel. Thus

$$M_A = P_1.a_1 = P_2.a_2 = P_3.a_3$$

As

$$P_2 = P_3 = \frac{a_1}{a_2} \cdot P_1$$

and (for a wheel displacement x)

$$x_2 = x_3 = \frac{a_2}{a_1} \cdot x_1$$

there results for the spring F_1 a stiffness

$$f_1 = \frac{P_1}{x_1}$$

and for the springs F_2 and F_3, a stiffness

$$f_2 = f_3 = \frac{P_2}{x_2} = \frac{P_3}{x_3} = \left(\frac{a_1}{a_2}\right)^2 \cdot f_1$$

Thus with the same restoring moment with respect to the transverse axis A—A, the spring stiffness is inversely proportional to the square of the distance of the spring from this transverse axis. For restoring moments about the longitudinal axis B—B, which for example come into consideration for tilting of the vehicle body on curves, the following values are obtained:

(1) For the spring F_1, a restoring moment

$$M_B = P_1.b_1$$

(2) For the spring F_2, a restoring moment

$$M_B = P_2.b_2$$

or as

$$P_2 = \frac{a_1}{a_2} P_1$$

and

$$b_2 = \frac{a_2}{a_1} \cdot b_1$$

$$M_{B_2} = P_1.b_1 = M_{B_1}$$

i. e. all springs arranged on the straight lines O—F_1 and giving the same restoring moment about the axis A—A also give the same restoring moment about the axis B—B; the spring F_1 can thus always be replaced by equivalent springs arranged on these straight lines (i. e. along the struts S in the case shown in the drawing).

(3) For the spring F_3 the following restoring moment is exerted about the axis B—B:

$$M_{B_3}=P_3^1.b_3=P_3^1.b_1$$

As in this case the displacement of the springs F_3 and F_1 is the same,

$$P_3^1=\frac{a_1}{a_3}\cdot P_3=\left(\frac{a_1}{a_3}\right)^2\cdot P_1$$

Correspondingly

$$M_{B_3}=\left(\frac{a_1}{a_3}\right)^2\cdot P_1.b_1=\left(\frac{a_1}{a_3}\right)^2\cdot M_{B_1}=\frac{f_3}{f_1}\cdot M_{B1}$$

Thus under the above conditions and with the springs arranged on a line parallel to the longitudinal axis B—B, the restoring moments of the springs about this longitudinal axis are proportional to the stiffness of the springs and thus inversely proportional to the squares of the distances of the springs from the transverse axis A—A.

If, for example, $a_3=\frac{3}{4}a_1$, then with equal springing of both springs F_1 and F_3 with respect to obstacles encountered by a road wheel (restoring moment about the axis A—A), the stiffness on curves of the spring F_3 is 16/9 i. e. almost twice as much as the stiffness on curves of the spring F_1.

In general, it follows therefrom that, assuming an equal restoring moment about the axis A—A, all springs arranged top left of the straight line O—F_1 will have a greater stiffness on curves the farther they are away from the straight line O—F_1, the points of equal stiffness on curves (i. e. equal restoring moment about the axis B—B) lying on straight lines which pass through the pivot point O and some of which are indicated at *g* for example. Similarly by arranging the springs (in Fig. 1) bottom right of the straight line O—F_1, the stiffness of the springs on curves will be smaller until the value of zero is reached when the springs are arranged on the straight line B—B itself.

Conversely instead of increasing the s
on curves with the same obstacle springi
same arrangement of the helical springs c
a softer obstacle springing with the sam
bility on curves, the latter determini
choice of spring stiffness.

By the arrangement of the helical spr
accordance with the invention in such r
that they lie between the straight line
joining the centres of the wheels, and th
of attachment O of the strut arrangement
transverse axis A—A passing through th
O, the stability on curves and the c
springing can be adapted to the desired
tions in a particularly effective way, an in
stability on curves being desired as a rule

When there is combined movement, a
there is pivotal movement about the axi
as well as about the axis B—B, for exampl
one road wheel only is lifted, a springing
tained which has the properties of both k
springing.

Thus, according to the predominance
or the other mode of movement, a restori
ment will be exerted which approximate
or less to that about one or the other ax

In the practical construction, abutme
the helical springs could be provided la
on the struts or radius rods, on the axle
the brake supports or the like, unless the
bear directly against the axle or its strut
upper ends of the springs suitably bear
against the longitudinal bearers of the
which may be stepped upwardly at the
as shown in Figure 2. Instead of a helical
any other displacement spring arrange
similar manner can be used. Also, in p
the triangular strut or radius rod arran
for the axle as shown diagrammatically
drawing, any other strut or radius rod a
ment giving a similar effect can be used.

JOSEF MÜL

PUBLISHED

MAY 25, 1943.

BY A. P. C.

J. MÜLLER

VEHICLE SPRINGING

Filed Sept. 12, 1939

Serial No.
294,520

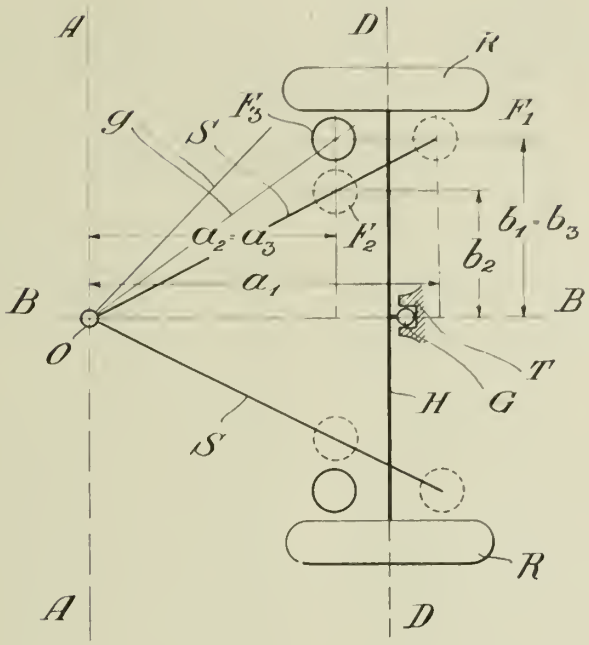

Fig. 1.

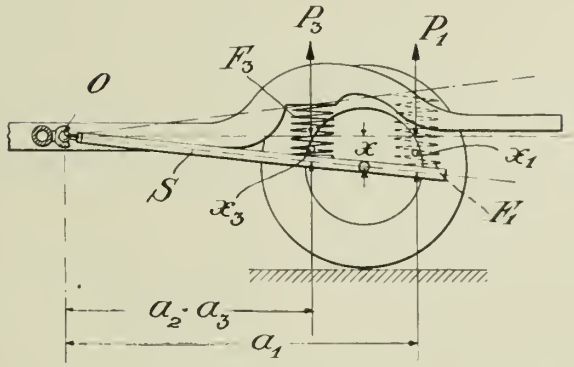

Fig. 2.

INVENTOR
JOSEF MÜLLER
BY A. A. Ulrich
ATTORNEYS

Published May 25, 1943

Serial No. 295,224

ALIEN PROPERTY CUSTODIAN

RECORD CONTROLLED MACHINE

Michael Maul, Berlin-Johannisthal, Germany; vested in the Alien Property Custodian

Application filed September 16, 1939

This invention relates to record controlled machines and more particularly to such machines adapted to be controlled by and in accordance with the graphical characters formed on the control records.

In the art "analysis" of "data-carriers" is effected in many different ways, chiefly in such manner, that the data-carriers supervise the control of machines in a certain manner. Examples thereof are printing telegraphs and type setting machines which are controlled by perforated tapes; the latter represent the data-carriers upon which the data are symbolically provided by perforations. In other branches of the art the data-carriers used for the control are provided in form of tickets or cards. To a large extent particularly in the accounting art in the most general sense, such as for instance in bookkeeping and statistics, the analysis of data provided upon cards takes place, though also in this instance the provision of the data upon tapes has become known. The "analysis" of the data carriers can take place in this branch of art in a different manner, either by ordering according to certain characters or numbers, or by accumulation of the latter ones, or by any other calculatory compilation or handling of the data. Due to their physical provision the data may effect a control of machinery, as it is, for instance, the case in the well known perforated record card system.

Now, it has already been suggested to depart from the perforations for the purpose of representing the data upon data carriers for the control of machinery and to represent the data only by graphical characters and to use the same themselves for the control of machinery; this affords the advantage of a quite considerable saving of paper and the immediate analysis of the easily readable data (see for instance U. S. Patent No. 2,000,403). Since the graphical characters must cause distinct controlling effects depending upon their meaning, of course, they must also differ from each other in a certain manner perceivable by machinery. Among the known suggestions there is now one according to which four predetermined "index-positions" (constituting the "index-position-system") are analyzed in each numerical graphical character provided upon the data carrier; certain positions are covered by the character, and these positions may be designated as index-marks of the graphical character. The configuration of the characters is so chosen that a distinct combination of index-marks is obtained for each character, whereby the graphical character is unequivocally determined (in this connection also single marks must be understood as "combinations" as is general terminology). Due to the above mentioned distinctness of the configuration of the printed characters, the analysis of the characters photoelectrically and the control of devices in accordance with the meaning of the analyzed characters may then take place.

Accordingly, an object of the present invention resides in the provision of means controlled by the printed characters on suitable data carriers or records, each of the characters having such configuration that the index-marks of the various characters are all upon one and the same straight line and only a single photocell is used for the analysis of a character, which due to the relative movement between the photocell and the data carrier will analyze successively the index positions lying upon the straight line and will cause in accordance with the distinct combinations of the analyzed index-marks the control of a character manifesting machine in a distinct manner.

The successive analysis of the index positions by the single photocell may be caused in various manners by the relative movement between the cell and the index positions. The preferred case is that the data carrier is moved past the photocell. This movement may take place step by step, it is, however, preferably effected by uninterrupted movement of the data carrier in order to increase the operation speed. Machines have also already become known wherein the relative movement between the analyzing means and the data carrier is reverse, i. e. wherein the data carrier is stationary and wherein the analyzing means is moved past said carrier. In a similar manner, of course, also in the present invention the relative movement between the photocell and data carrier could take place if this is deemed desirable. It may be seen that through the arrangement according to the invention an essential simplification is attained insofar as compared with the known suggestion instead of a plurality of photocells only a single one is necessary for the analysis; moreover, under certain circumstances it is also possible to attain through the analysis of the card while the same is in uninterrupted motion an increased operation speed.

In a preferred embodiment of the invention graphical characters are applied whose index-marks are upon a vertical of the characters, and analysis takes place in a simple manner thereby that the characters are moved along this vertical past the photocell, as this is for instance done

with the perforated card columns in record cards upon the passage past a single analyzing brush. However, it has also already become known and it is quite usual for instance in the art of telegraphy, to analyze the characters (for instance hole combinations) of a number or of a word one by one in cross direction of the characters and in the art of perforated record cards this type of analysis is known under the term "endwise analysis." Such an endwise analysis is attained according to the invention by graphical characters so configurated that their index-marks are upon a horizontal of the characters and the characters are moved along said horizontal past the photocell. If data carriers are used having characters so chosen that for all characters of a set of characters index-marks are obtained upon a vertical as well as upon a horizontal line, such data carriers may be selectively analyzed in any one of two different manners by moving the characters either along the vertical line or along the horizontal line past the photocell.

Analogous to a known suggestion wherein the hole combinations are formed in a distinct manner by points and slots (see for instance U. S. Patent No. 1,976,352), according to the invention the control of machinery may also be effected by graphical characters wherein the index-marks are formed by point-like as well as by line-like sections of the characters, so that for the identification of the characters distinct combinations of index-points and index-lines are obtained; however, in this instance it is assumed that an index-line extends at least over a length corresponding to two index-positions. Index-points and index-lines pass one by one by the photocell and the analysis takes place in such manner that the analyzing device responds in a distinct manner upon two adjacent index-positions depending thereupon whether they are occupied by two single index-marks or by an index-line of the character.

The control of machinery according to the invention may be applied in various manner as has already been mentioned in the introduction in connection with the known control of machinery by data carriers. In the following therefore only a few embodiments are essentially diagrammatically illustrated and described; namely, the control of a sorting machine for record cards, the control of a tabulating machine for the cards, and the control of a telegraph or teletype printing device by a printed tape.

Other objects of the invention will be pointed out in the following description and claims and illustrated in the accompanying drawings, which disclose, by way of example, the principle of the invention and the best mode, which has been contemplated, of applying that principle.

In the drawings:

Fig. 1 shows in a greatly enlarged scale the configuration of the graphical characters applied. In the first and third row the characters themselves are indicated and in the second and fourth row the characters are shown in dotted lines, as well as the associated combination of index-marks in each character.

Fig. 2 illustrates a record card **10**, carrying four lines *a*, *b*, *c*, *d* of graphical characters.

Fig. 3 is a diagrammatic view of a sorting machine for record cards according to Fig. 2.

Fig. 4 is a section through the front part of this machine.

Fig. 5 illustrates in an enlarged scale the light-

electric analyzing arrangement for th
machine.

Fig. 6 is the wiring diagram of the sor
chine.

Figs. 7, 8, 9, 10 and 11 illustrate essent
grammatically a tabulating machine
controlled by cards according to Fig. 2.

Fig. 7 shows a top view upon the a
spot past which the record is fed for
analysis."

Fig. 8 is a section through the analy
vice according to line **8—8** of Fig. 7.

Fig. 9 illustrates the mechanical pa
tabulating machine; namely, the printi
and the accumulator control taking pla
cordance therewith.

Fig. 10 shows the wiring diagram of
ulating machine.

Fig. 11 shows one of the translato
which are applied in Fig. 10 and whic
dicated in the latter figure merely by

Fig. 12 shows graphical characters
the index-marks are formed by ind
and index-lines and wherein an index-
system is provided upon the horizontal
upon the vertical. The manner of ill
is essentially the same as in Fig. 1.

Fig. 13 shows a record card with t
acters illustrated in Fig. 12, said chara
ing again arranged in four lines *a*, *b*, *c*,

Fig. 14 illustrates diagrammatically
lator device serving for the analysis
acters according to Figs. 12 or 13 respe

Figs. 15*a*, 15*b*, and 15*c* illustrate in
enlarged scale the letters of the alph
the numerals as well as some punctuat
acters; in the same manner as in the ill
according to Fig. 1, the vertical and the
tal index-position-system is indicated
however, all characters must be disti
each other, in the present instance s
positions are necessary.

Fig. 16 shows a part of the printed t
which the characters according to the
tion in Figs. 15*a* to 15*c* are indicated.

Fig. 17 illustrates diagrammatically
rangement for a telegraph apparatus
typewriter which is controlled by a tap
ing to Fig. 16.

Now, first a sorting machine for card
ing to Fig. 2 shall be explained as it is i
in Figs. 3 to 6. The sorting machine i
in Fig. 3 is provided in the usual manne
sorting pockets for the numerals 0 to 9
R-pocket for unrecorded cards. The
are inserted into the magazine. The
drives by means of the crank drive 1
ciprocating card gripper knife **13** by w
cards are advanced and are then fed by
rollers **14** at first past the analyzing d
then into the sorting pockets. Sorti
place in the known manner in such way
cards are fed between sorting chutes 1
armature of the sorting magnet **16**. Th
magnet **16** is energized at a differential
responding to the meaning of the analy
acter, so that the corresponding chutes
the card can be lowered while the chut
upon the card are retained by the sam
the card will pass between two chutes
be fed by the rollers **14** into the corre
pocket. The light-sensitive device is pr
a carrier **20** (Figs. 4 and 5) and is adjus
known manner across the card upon th
card column by means of the spindle **23**

by a crank 24. The selection of the desired line takes place by a line selector still to be explained.

Analyzing arrangement

The carrier 20 accommodating the photocell arrangement has carrying rollers 22, running upon cross bars 21, so that the carrier 20 may be adjustable through the spindle 23 for the purpose of column selection. The photoelectric analyzing arrangement comprises a light source 28 the rays of which are concentrated upon the card 10 by the system 35 of lenses for analyzing the index-positions. Depending thereupon whether a light or dark index-position (in the latter instance accordingly an index-mark) is being analyzed, much or almost no light will be reflected from the card and will be concentrated by the system 30 of lenses which directs the light to the photocell 31; the latter will become effective each time if the value of the light rays projected thereon becomes a minimum. The electric supply to the light source 28 is effected by cross running contact bars 26 on which slide contact pins are resiliently mounted in the carrier 20, and in the same manner the photocell 31 is connected to the cross running contact bars 27.

The operation is now as follows: By means of the line selector 44 the line is selected which shall be effective to control the sorting operations, and then the carrier 20 is adjusted by rotation of crank 24 (Fig. 3) to select the desired column according to which sorting shall take place within the selected line. Then only the character of a single line will be analyzed at one time, and the four index-positions will be analyzed one by one. The sorting impulses initiated by each position (if they are occupied by index-marks) control a translator which governs the sorting chute operation in accordance with the meaning of the characters. In the present embodiment there is also a storing mechanism provided which is known per se (see U. S. patent No. 2,025,602) and which operates as follows: In one analyzing cycle a first storing device is controlled in accordance with the analyzed character; between two operating cycles the setting of the first storing device is transferred to the second storing device and immediately thereafter the first storing device is again restored so that it is free to be controlled by the next card; and while in the next operating cycle the first storing device is controlled by the next card, the sorting chutes are controlled from the second storing device in accordance with the result of the analysis of the preceding card. Before the transfer of the setting from the first to the second storing device the second storing device is restored to normal before a second entry is made.

In the wiring diagram in Fig. 6 the light source 28 movable along the contact bars 26 is connected to the lines 40 and 50. Between these lines a resistance 41 is inserted having connected to one terminal thereof the grid resistance 51 and to the other terminal the relay 47 which in turn is connected to the anode of an amplifier tube 46. Between the said grid element and the resistance 41 there is a parallel circuit connected to the grid resistance 51 including the photocell 31 which is movable along the contact bars 27. Since the light rays impinging on the cell are only interrupted by the dark index-marks of the characters, the relay 47 is always energized (when the machine is supplied with current) and will therefore keep its contact between line 49 and armature 48 open. The line 58 branching from the armature 48 of relay 47 leads to the line selector 44. Depending thereupon whether a character in the *a*, *b*, *c* or *d* line shall be assorted, this line selector is adjusted to any one of the lines 59*a*, 59*b*, 59*c*, or 59*d*. A commutator arm 43 in a commutator generally indicated at 42 is moving synchronously with the passage of the index-positions in the focus of the systems of lenses and may establish connections one by one between the four contact pieces in the contact bar of the contact arrangement generally indicated at 45*a*, 45*b*, 45*c*, and 45*d*. Since the movement of the arm 43 takes place exactly synchronously with the analysis of the index-points, the four translator magnets 60 are connected one by one to the line 58 upon the passage of each line of characters, however, only upon the passage of that line to which the line selector 44 is adjusted. Each time an index-mark passes in the focus of the system of lenses, the armature 48 will temporarily drop and then a flow of current will be established from line 40 to the coordinated translator magnet 60. The energization of the translator magnets 60 is therefore controlled by a character in the selected line of the selected deck and in the same combination as is indicated by the index-mark combination of the analyzed character. If a magnet 60 is energized it will raise its armature 61 so that the pawl 64 belonging to the first storing device will be drawn to the left and after analysis of a character the pawls 64 will be adjusted in the same combination as has been indicated by the index-marks of the character. Now, between two subsequent operating cycles the second storing device must be reset, and after this resetting operation the parts 66 and 67 are in the position as shown in Fig. 6. Shortly thereafter the transfer of the setting from the first to the second storing device will take place. This is effected by positioning the bar 69 to the left by a cam so that the bell crank 63 will press the released pawls 64 by means of bars 65 downwardly and thereby the lever 66 will be engaged behind the pawls 67. In this manner the setting representing the character is now transferred to the second storing device constituted by the parts 66, 67 to which storing device the translator generally indicated at 70 is also associated and which now controls during the second operating cycle the sorting means in accordance with the character analyzed in the preceding operating cycle. The necessary resetting of the second storing device is effected by the cam controlled movement of the bar 68 to the right whereby the parts will again be brought in the position shown in Fig. 6. Resetting of the first storing device which must take place shortly after the said transferring operation is effected by the cam controlled movement of the bar 62 to the right. The lines connected to the translator 70 are analyzed in a known manner by a commutattor 75; at the predetermined timed interval corresponding to the meaning of the character the sorting magnet 16 will receive an electrical impulse over the selected translator line so that the card will be fed into the pocket corresponding to the character. The relay 76 establishes a stick circuit for the magnet 16 which is again interrupted by a contact controlled by cam 77.

In Figs. 7 to 11 the tabulating mechanism is diagrammatically illustrated, wherein it has been assumed that, contrary to the analysis in the described sorting machine, an "endwise analysis" of the cards is concerned. As is shown in Figs. 7

and 8, for this purpose there is provided for each numeral line an analyzing device in a carrier 81 so that four analyzing carriers 81 are arranged side by side. These carriers and the light sources mounted therein as well as the photocell must, of course, be comparatively small; however, with the sizes illustrated this is well possible because nowadays photocells and light sources can be manufactured having only a diameter of 10 to 15 mm. Feeding of the cards 10 takes place in cross direction through the feed rollers 82 and in the same manner as has been indicated in Fig. 5 the index-points of a character pass one by one in the focus of the light-responsive system. The light source is here indicated at 84 and the photocell at 83. The difference in the analysis as compared to Fig. 5 is only that in case of Figs. 7 and 8 the index-marks upon the horizontal of a character are analyzed. The mechanical part of the tabulating machine as it may be applied in connection with the analyzing device according to Figs. 7 and 8 is illustrated in Fig. 9 which is well known in the art (see U. S. patent No. 1,791,-762). It is assumed that for each column of the card a device according to Fig. 9 is provided consisting essentially of a drive bar 85 having on the upper end a set of types 86 and being provided with a toothed frame adapted to engage into the gear 87 of the counter. The bar 85 is raised by the driver 91. In accordance with the meaning of the character to be entered, the controlling magnet 89 is energized at a differential time to release thereby the locking pawl 88 so that the bar 85 will be locked in its movement. Thereby in a known manner the type of the set of type 86 which corresponds to the analyzed character will be adjusted in printing position and then when the gear 87 is rocked in engagement with the toothed frame, upon the back stroke of the bar 85 the corresponding amount will be entered into the accumulator. The mechanical gear connection which is not illustrated is now provided in such manner that the feed device 82 of Fig. 7 is in operating connection with a device according to Fig. 9 in the following manner: The cards 10 do not follow each other immediately in succession because between the analysis of two cards there is always an idle cycle, i. e. there is a space corresponding to one card. In the first half cycle therefore the analysis of the card and the adjustment of the translators still to be described will take place, while in the second half (in which instance the analyzing device is idle) raising of the controlling bars 85 takes place and therewith printing and entering of the analyzed amounts; the controlling bars are then restored at the end of the second half cycle, as is known in machines of this type. The electrical wiring of this arrangement is diagrammatically indicated in Fig. 10. For each line there is, of course, an analyzing carrier 81 and in the device shown in Fig. 10, only the mechanism necessary for analyzing a single line is shown. The manner of operation follows readily from the previous explanations: When an index-mark is analyzed the relay 47 is deenergized and the contact between 48 and 49 will be closed. The translator magnets will therefore again receive current in accordance with the analyzed index-mark combination over line 58. The line 58 is connected to the ring 92 which is connected through the contact arm 93 one by one with the contact pieces of the set of contact pieces 95*p* etc. to 95*b*, 95*a* of the commutator 95, each of said sets of contact pieces consisting of four pieces. The four contact pieces 95 are connec four translator magnets of a translator Accordingly, in the illustrated instanc 95*a* to 95*p* of contacts 95 are provided commutator 95 since one line consists umns and since, of course, a correspond ber of translator units 200 as well as c magnets 89 and controlling bars 85 are vided for this line; in the drawing, how several of them are illustrated. The a tates once in the first half of the opera and in the second half it makes a furth tion; however, it may become effective o first half cycle since the common line c is kept closed by a cam only in this first in the second half cycle no cards are ana entry of the stored or analyzed data i into the printing and accumulating m Fig. 11 illustrates a translator device of the translator magnets and the line generally indicated at 200. For reason plicity this translator device is indicat 10 only by a rectangle. Each translato cludes four translator magnets 60 c in a known manner selector bars by rai armature and raising therewith the sel which in turn, by means of the contacts thereon, will select at one time only o different lines in accordance with the of the analyzed character. In a comm these lines are analyzed one by one and later the controlling magnet 89 will be which will then supervise the controlli (Fig. 9) in accordance with the analy acter. In the present instance only an known translator, i. e. a translator wi serial storing device previously expl necessary. The adjustment of the trans take place, as has been assumed, durin half of the operating cycle and the c the recording mechanism only during t half. The translator can then remain in this second half of the operation may cause the control of the registerin nism. It is only after this control has fected that the translator is restored in manner through a restoring bar to its h tion so that also the shift bars may aga into the position shown in Fig. 11, w have been held in raised position du adjustment by the armatures of transla nets 60 acting as pawls.

The control of the described sorting lating machine can, however, also be cards according to Fig. 13 in which th ters have a configuration as shown in an scale in Fig. 12. It is then only necessa vide three contact spots 101 (Fig. 14) the four contact spots 95 (Fig. 10) these three contact spots control impu be derived so that the five controlling 102 will receive such adjustment tha translator lines supervised by said mag time only one line; namely, the line co ing to the analyzed character will be For this purpose a device known per s used, as it is for instance described in ent No. 2,065,864, and which therefore briefly be explained herein.

Fig. 14 illustrates the modificatio translator device in the case that the s be used in a sorting machine of the typ described and that control shall be ef cards according to Fig. 13. The pho analysis takes place therein in the sam

as in the previously described sorting machine by light source 84 and photocell 83 which govern the relay 47. The same controls by its armature 48 a contact over which a current impulse may flow from line 49 to the above mentioned line selector 44. The distributor commutator to which the line selector 44 is in connection depending upon the selected line, has however, in the present instance for each line instead of four only three contact pieces 101, because for each character only three index positions are provided. There are, however, five translator magnets 102 provided. In order to derive an additional controlling effect from the occupation of the index-positions by an index-line, in the present instance a line 114 branches from the line selector 44 which line may be connected by a contact 106 to the magnet 102—I. The magnet 102—II may be connected by a contact 107 to the magnet 102—X; further, the line 114 may be connected by a contact 109 to the magnet 102—II while the magnet 102—III may be connected by a contact 110 to the magnet 102—Y. The contacts 106, 107 are closed by the armature 105 upon energization of magnet 102—I and the contacts 109, 110 through the armature 108 of magnet 102—II. Since the mechanism shall be used for a sorting machine, in the present instance again provision for storing has been made in the form of two storing devices which operate in series. Since, however, this arrangement is the same as in the previously described example, for reasons of simplicity it is indicated in Fig. 14 only by a casing 140. The selection of the translator lines is again effected by shifting of the contacts by means of the shift bars 115 of the translator.

If only index-points are analyzed, the manner of operation follows readily from the previous description because then only the magnets 102—I, 102—II and 102—III are energized. The manner of operation in case of analysis of an index-line will be seen from the following explanation in connection with the analysis of the numeral "1": The numeral "1" is characterized by an index-line extending over all three index-positions, in the present instance, of course, the analysis according to the vertical of the numeral being assumed. Upon the passage of the lowermost index-position the magnet 102—I will therefore be energized and the corresponding shift member in the first storing device will therefore be adjusted. Since, however, the first and the middle index-points are now connected to each other, thus forming an index-line, the armature 48 keeps its contact closed and therefore, though the arm of the commutator will again leave the first contact piece 101, the current over the magnet 102—I will not be interrupted since the same will receive current furtheron over line 114 and contact 106. If then the middle contact piece 101 is engaged by the commutator arm, the magnet 102—II will receive a controlling impulse. Simultaneously, however, also a controlling impulse will be sent over contact 107 to the magnet 102—X so that the controlling means of the latter will now also be adjusted. Since between the second and third index-position the armature 48 will still keep its contact closed, the magnet 102—II will be energized by the current flow over line 114 and contact 109 and will therefore remain energized. If then the third index-position is analyzed, the magnet 102—III will receive a current impulse. Simultaneously, however, a current impulse will flow over contact 110 to the magnet 102—Y. Therefore, after analysis of a character all five magnets 102 have been energized. If this adjustment is transferred in the following operation cycle upon the second storing device, all controlling bars 115 will be raised and it will be seen that in this instance actually the line corresponding to the character "1" has been selected. The same may then again cause the control of the sorting chutes in the described manner.

For the remaining characters the controlling operations will take place in a corresponding manner, depending thereupon whether an index-point or an index-line is analyzed. It is, of course, obvious that the arrangement according to Fig. 14 may also be applied in the wiring according to the Figs. 10 and 11, so that a tabulating device for cards according to Fig. 13 is obtained. The wiring of Fig. 14 must then only be adapted to the translator key for the index-marks upon the horizontal.

The Figs. 15*a*, 15*b*, 15*c* illustrate in a greatly enlarged scale the letters of the alphabet, the ten numerals and some punctuation characters. In the same manner as in Fig. 1 the index-position-systems and the index-marks are indicated. It will be seen that two index-position-systems are provided, one upon a horizontal and one upon a vertical, each having six index-positions and all characters differ from each other within their system by distinct combinations of index-marks. In Fig. 16 a portion of a telegraph tape 100 is illustrated. The latter is fed past the analyzing spot in a known manner in cross direction by means of feed rollers engaging into marginal perforations of the tape; analysis is effected in the present instance by a light-responsive analyzing device essentially being of the same type as illustrated in Fig. 5. Therein, of course, only the index-marks upon the horizontal are utilized, however, it will be clear, that for instance in a sorting machine for letters and numerals also the index-marks upon the vertical could be utilized.

The wiring diagram of the telegraph or teletype mechanism is diagrammatically shown in Fig. 17. The tape 100 is fed by feed rollers 115 past the carrier 20 of the photoelectric analyzing device, and if an index-mark of the character is analyzed, the controlling mechanism will become effective and the contact 121 will be closed. Therefore, for each character the impulse emission over the contact 121 will take place in distinct combinations in timed sequence. These controlling impulses may then be transmitted in a known manner by a distributor over a transmission medium, such as a line, to a printing telegraph. Devices of this type are well known so that in the following only diagrammatically a device is referred to corresponding essentially to the Siemens-telegraph, which in the present instance, however, is accommodated to 38 characters without any shifting mechanism. The impulses initiated by the printed tape pass over line 120 and brush 121*a* to the emitter commutator 122, from which they will be directed to the line 123. At the receiving end there is a device provided, consisting of a receiving contact ring 125 and six translator contact rings 127, whose brushes are moving in a known manner synchronously with the emitting commutator 122 which latter, of course, is in turn synchronized with the feed 115 for the tape 100. Upon the receiving end the impulses will pass from a brush 124 to the receiving ring 125, they will then pass, depending upon the arriving combination

line **126** to the ground. Each of the relays R_1 to R_6 has two coils and the coils operate alternately in such manner that the one set of coils takes up the arriving combination of impulses while the other set of coils causes shifting of the contact levers **130**r_1 to **130**r_6 coordinated to the relays. These contact levers establish connections to the translator rings **127** which in turn are connected to each other in the illustrated manner by brushes **128**. The parts **127** constitute in effect, as has been mentioned, contact rings, however, for reasons of better illustration they are shown in the present instance in the usual manner in development. These contact rings are divided in contact segments insulated from each other, some of which are indicated in the present instance shaded and some unshaded in order to make the division clearer. Accordingly, the shaded portions are also conducting and are no insulations. If the armature levers **130**r_1 to **130**r_6 are shifted in the combination determined by the analyzed character, there

rings **127** at a certain moment which path
sponds to the respective character. Syn
nously with the brushes of the contact rin
rotates the typewheel **132** upon which the
are provided in the sequence indicated o
lowermost contact ring. If the printing m
129 is energized, the hammer **131** will imp
paper tape **133** against the typewheel **132** s
the type which is just passing will be pr
The magnet **129** will be energized at the m
determined by the selection of the lines a
this moment also the type corresponding
analyzed character is just in printing po
and will be printed upon the tape **133**.

The essential features of the invention
been explained before in connection with
applications of the invention, however, it v
understood that the provisions according
invention may be applied in all instances
the control of machinery by graphical char
is concerned.

MICHAEL MA

PUBLISHED
MAY 25, 1943.
BY A. P. C.

M. MAUL
RECORD CONTROLLED MACHINE
Filed Sept. 16, 1939

Serial No.
295,224
12 Sheets-Sheet 1

Fig.1

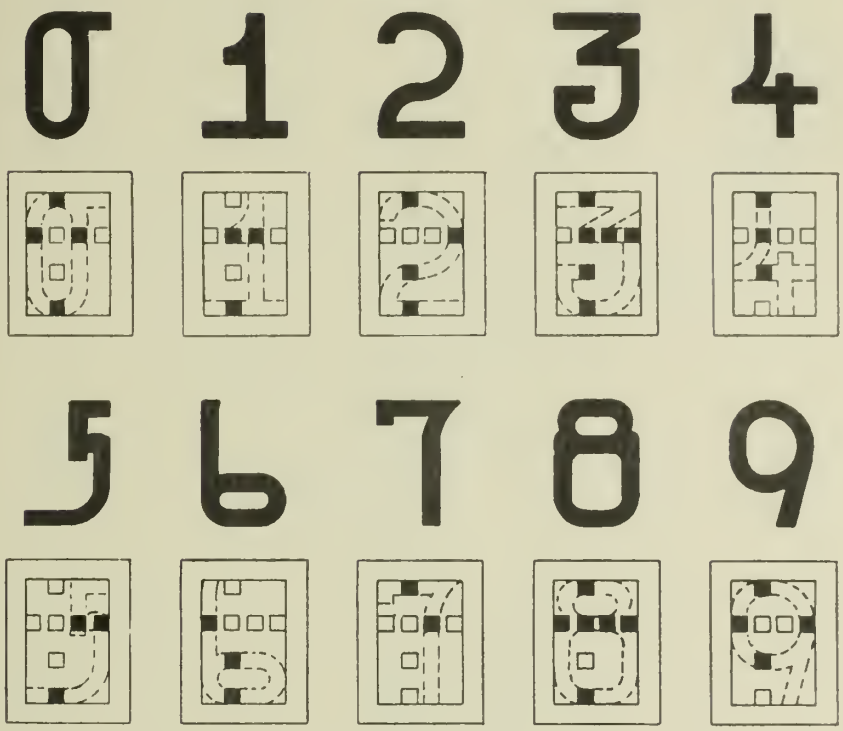

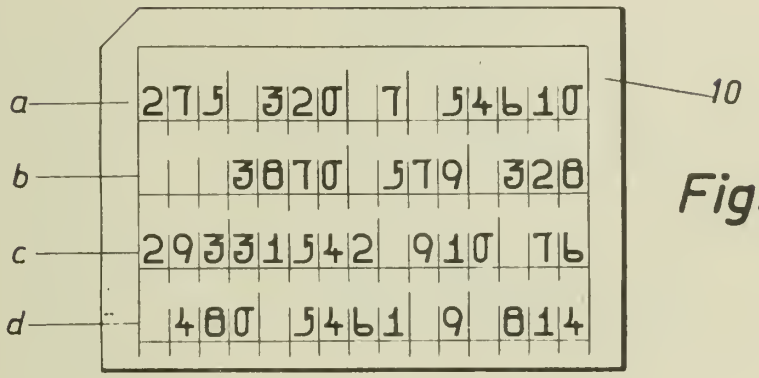

Fig.2

INVENTOR
Michael Maul
BY
W. M. Wilson
ATTORNEY

PUBLISHED

MAY 25, 1943.

BY A. P. C.

M. MAUL

RECORD CONTROLLED MACHINE

Filed Sept. 16, 1939

Serial No.

295,224

12 Sheets-Sheet 2

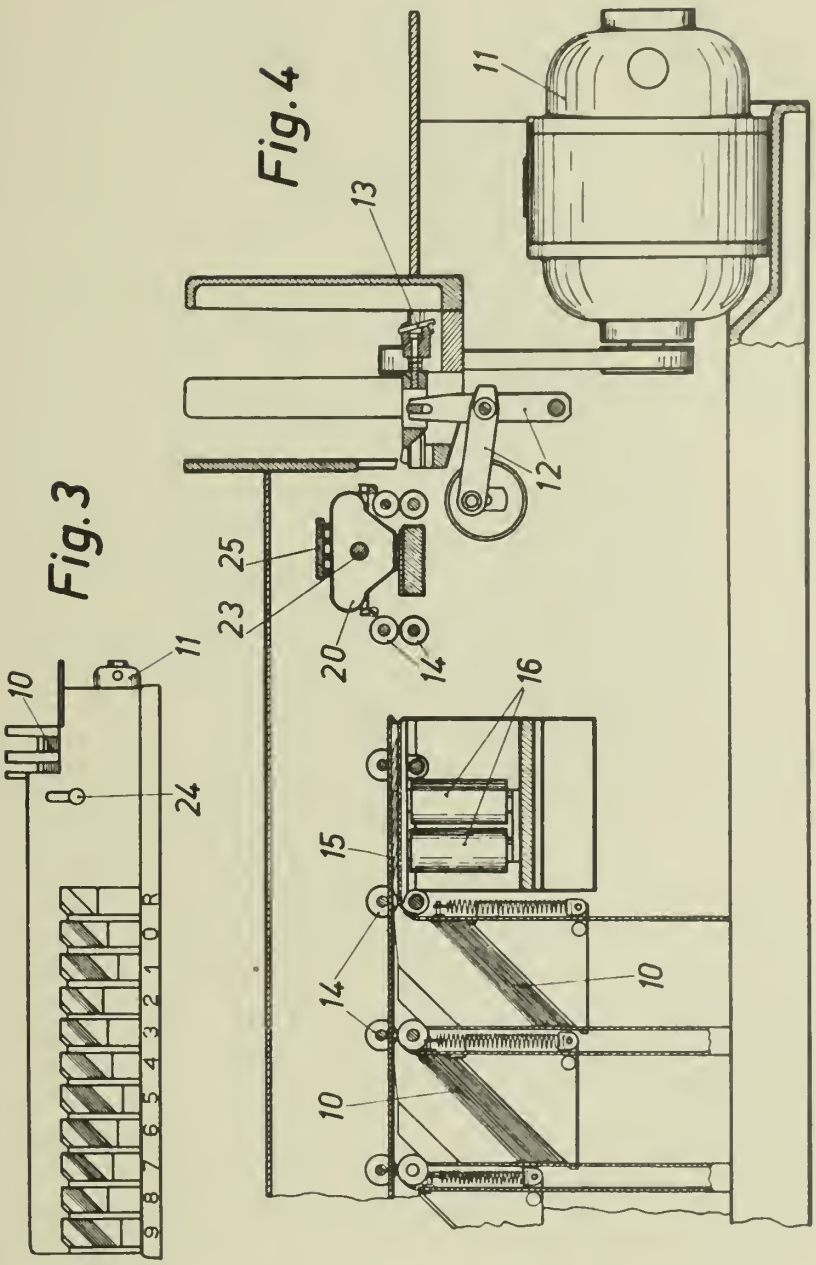

INVENTOR

Michael Maul

BY

W. Mitchison

ATTORNEY

PUBLISHED
MAY 25, 1943.
BY A. P. C.

M. MAUL
RECORD CONTROLLED MACHINE
Filed Sept. 16, 1939

Serial No.
295,224
12 Sheets-Sheet 3

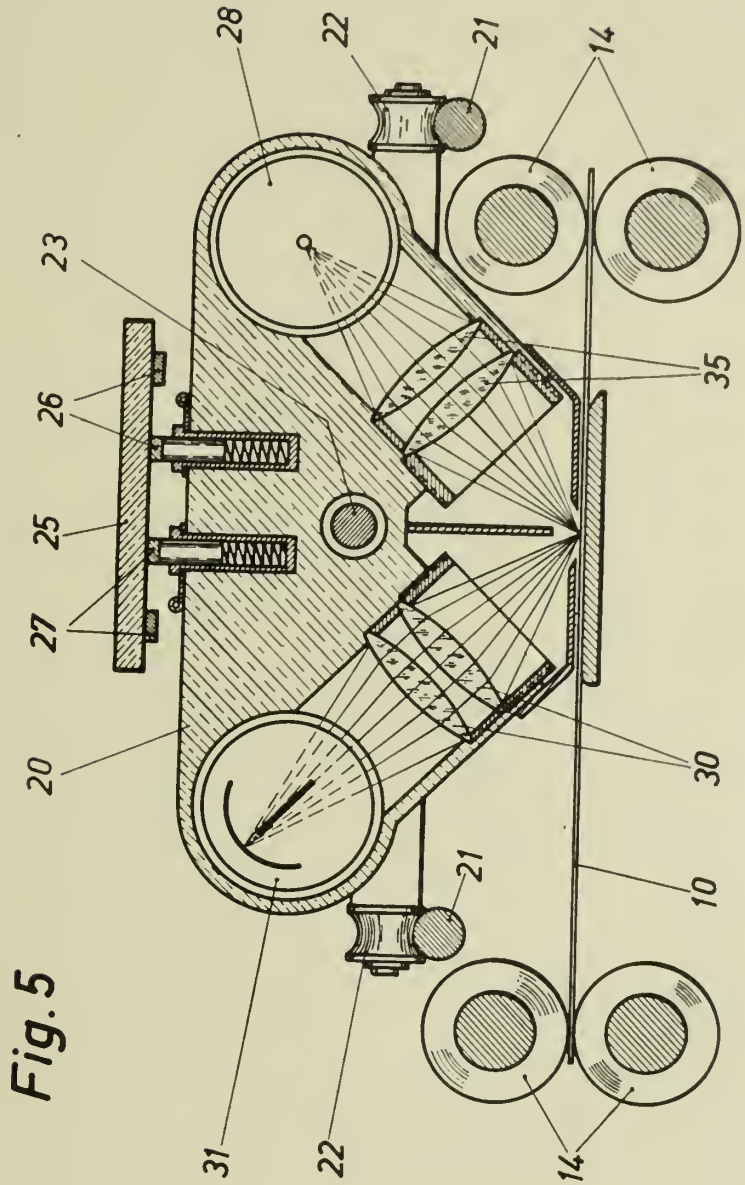

Fig. 5

INVENTOR
Michael Maul
BY
W. McAlson
ATTORNEY

PUBLISHED

MAY 25, 1943.

BY A. P. C.

M. MAUL

RECORD CONTROLLED MACHINE

Filed Sept. 16, 1939

Serial No.

295,224

12 Sheets-Sheet 4

Fig.6

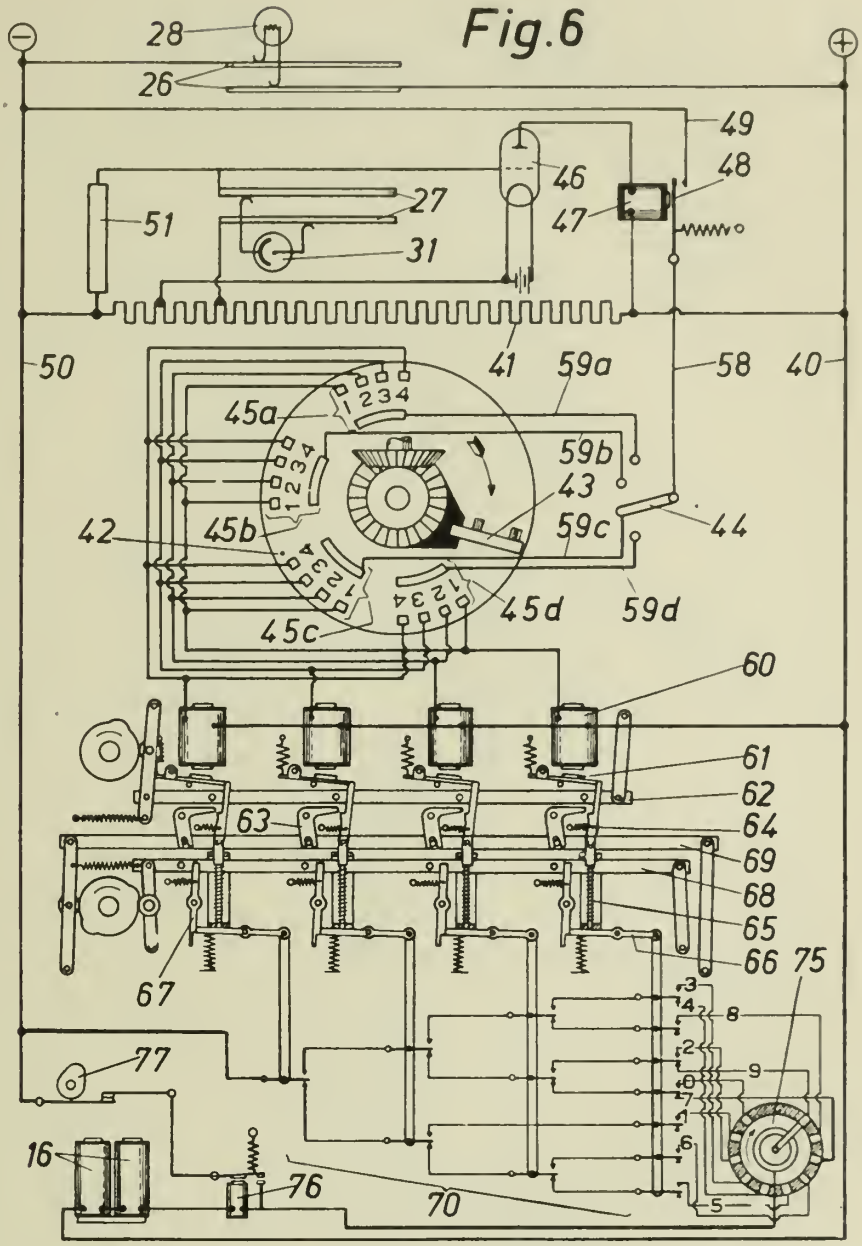

INVENTOR

Michael Maul

BY

W. McMahon

ATTORNEY

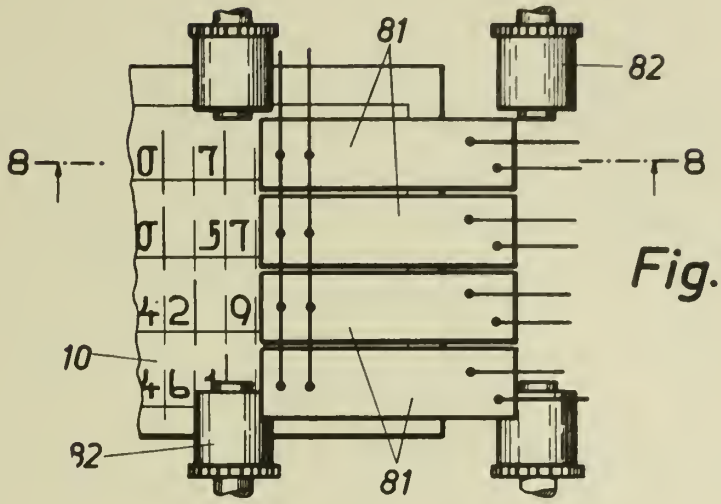

Fig.7

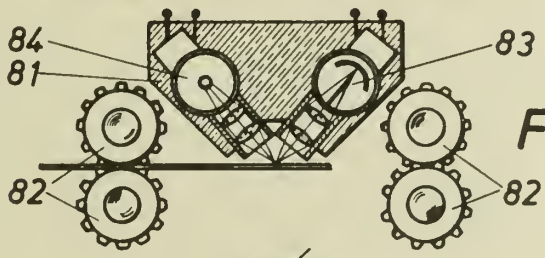

Fig.8

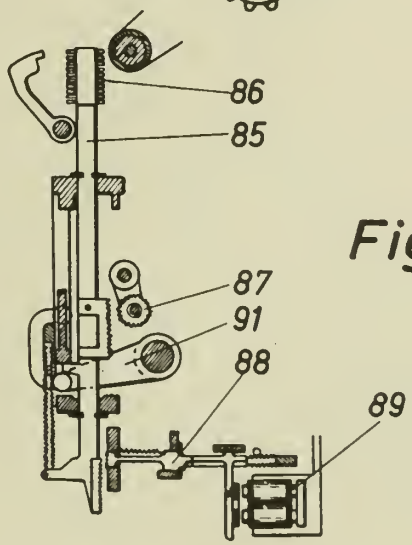

Fig.9

INVENTOR
Michael Maul
BY
W. Malone
ATTORNEY

PUBLISHED
MAY 25, 1943.
BY A. P. C.

M. MAUL
RECORD CONTROLLED MACHINE
Filed Sept. 16, 1939

Serial No.
295,224
12 Sheets-Sheet 6

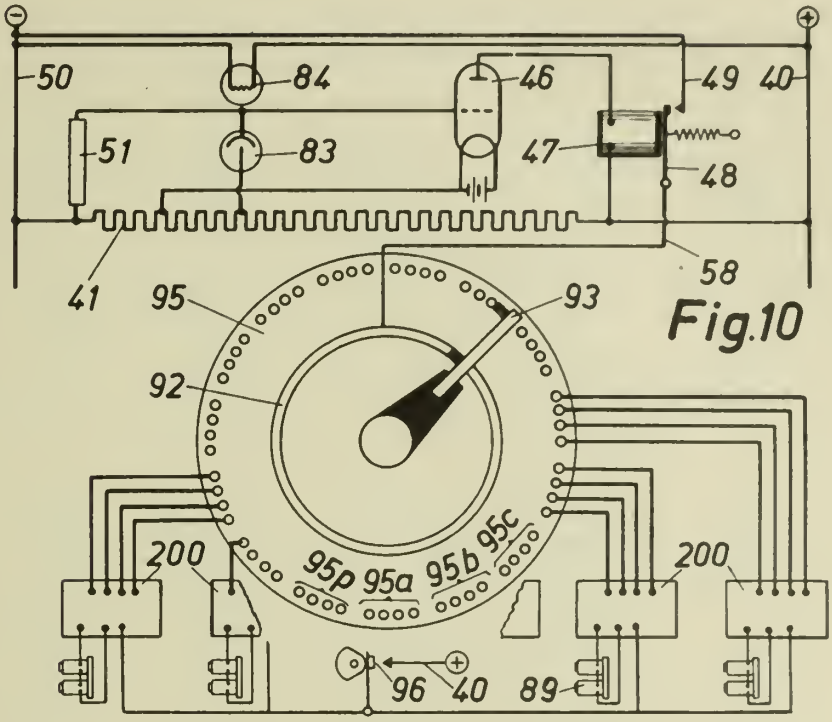

Fig.10

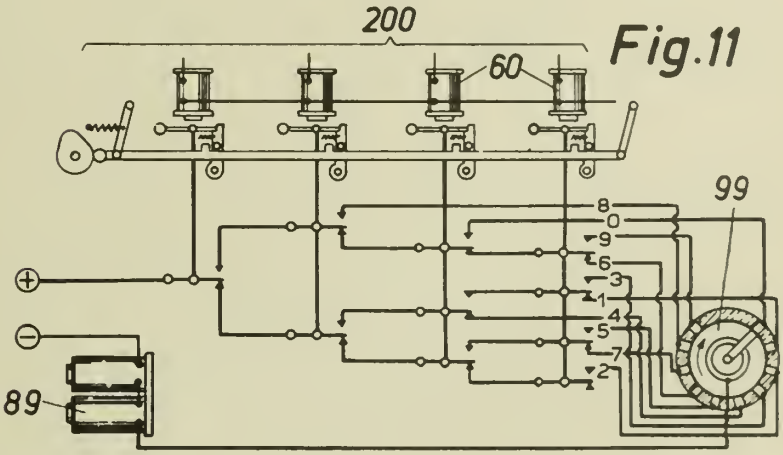

Fig.11

INVENTOR
Michael Maul
BY
W. Morrison
ATTORNEY

PUBLISHED
MAY 25, 1943.
BY A. P. C.

M. MAUL
RECORD CONTROLLED MACHINE
Filed Sept. 16, 1939

Serial No.
295,224
12 Sheets-Sheet 7

Fig.12

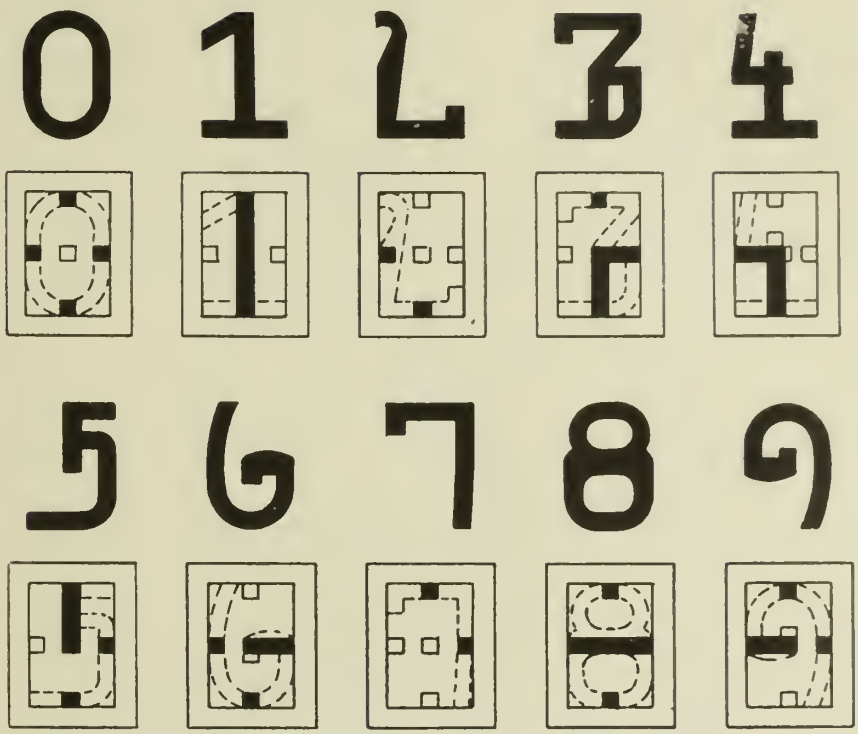

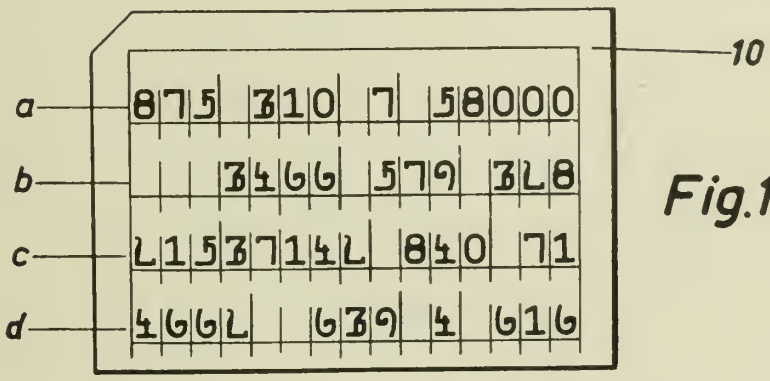

Fig.13

INVENTOR
Michael Maul
BY
W. M. Wilson
ATTORNEY

PUBLISHED
MAY 25, 1943.
BY A. P. C.

M. MAUL
RECORD CONTROLLED MACHINE
Filed Sept. 16, 1939

Serial No.
295,224
12 Sheets-Sheet 8

Fig. 14

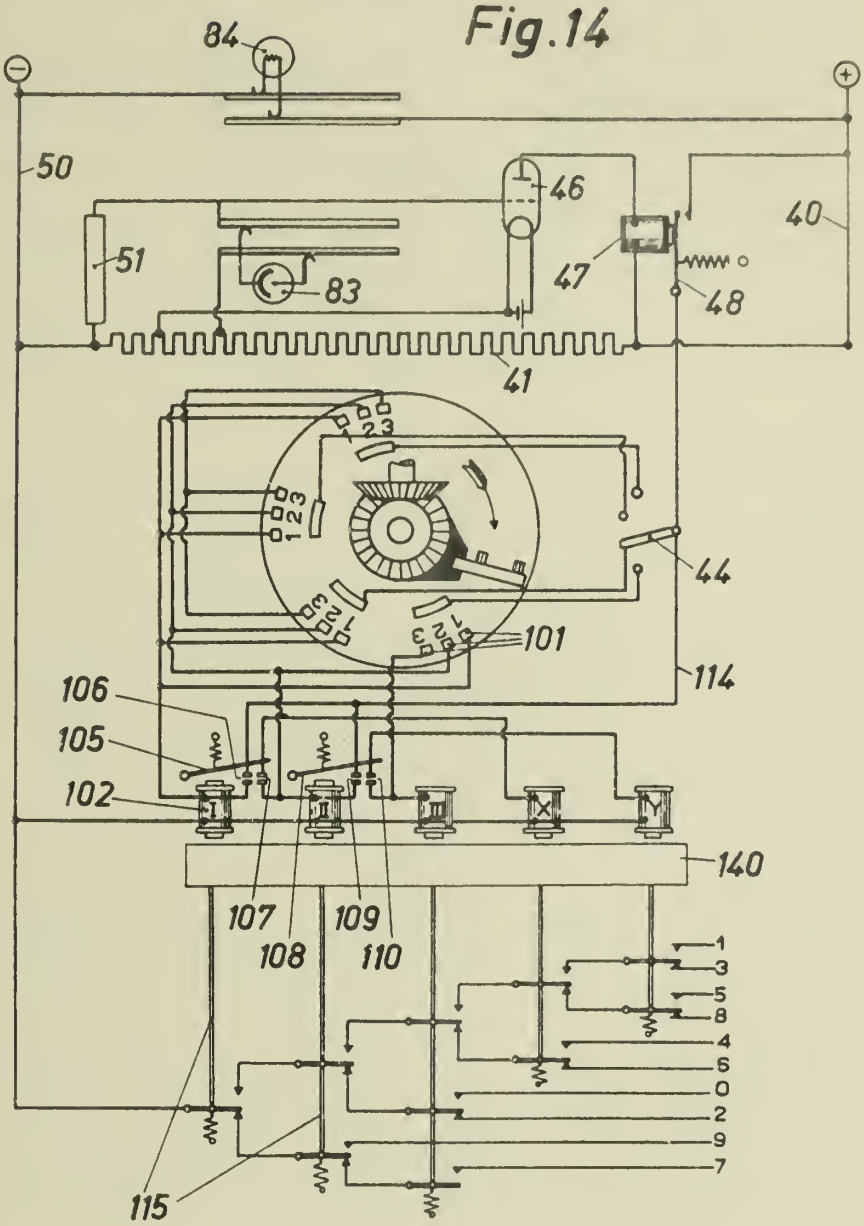

INVENTOR
Michael Maul
BY
W. M. Wilson
ATTORNEY

PUBLISHED
MAY 25, 1943.
BY A. P. C.

M. MAUL

RECORD CONTROLLED MACHINE

Filed Sept. 16, 1939

Serial No.
295,224

12 Sheets-Sheet 9

Fig. 15a

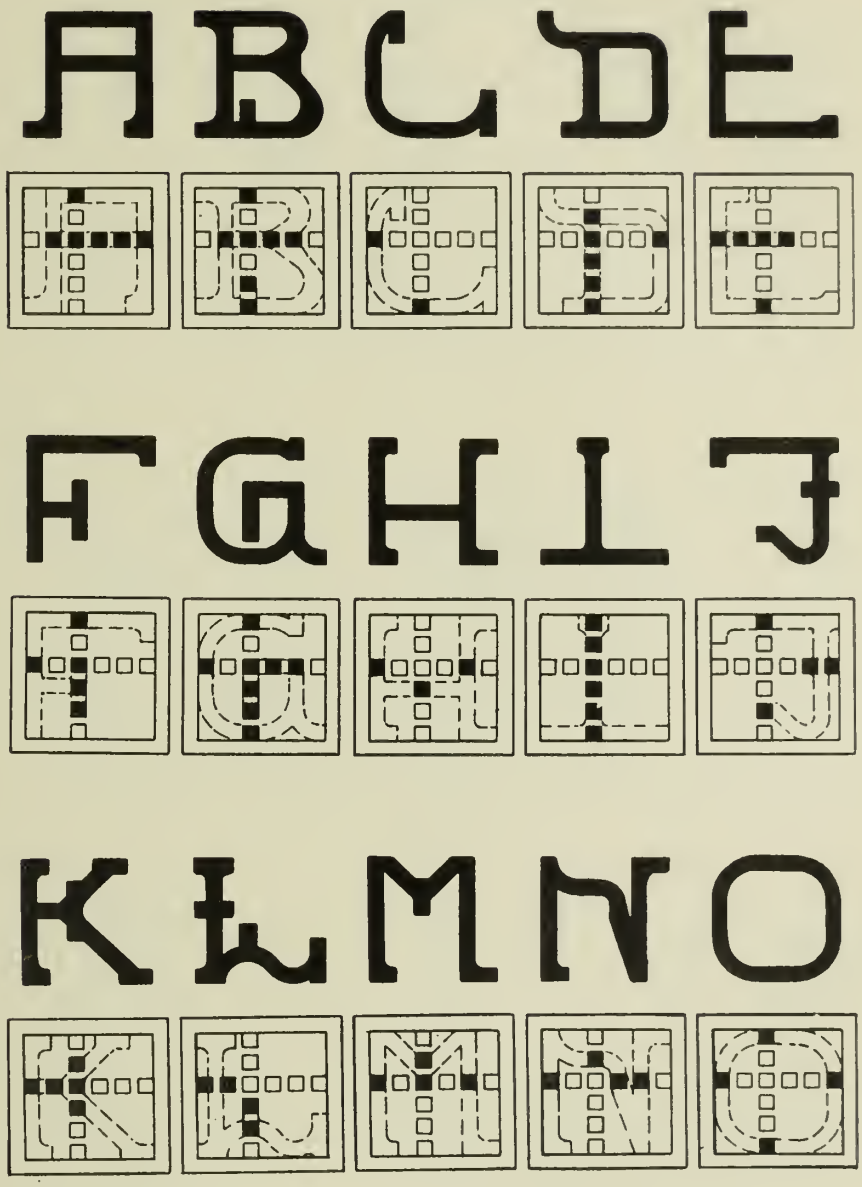

INVENTOR
Michael Maul
BY
W. Malcolm
ATTORNEY

Fig.15b

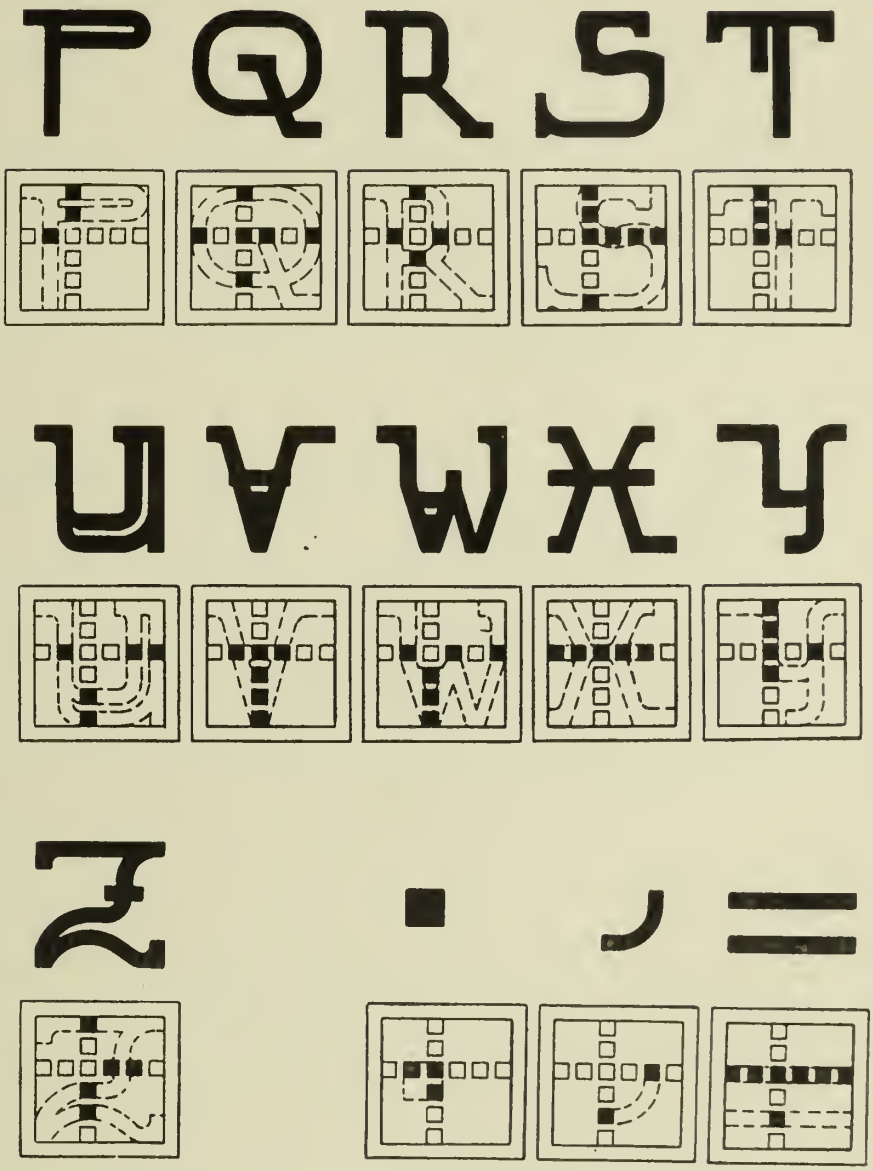

INVENTOR
Michael Maul
BY
W. M. Wilson
ATTORNEY

PUBLISHED
MAY 25, 1943.
BY A. P. C.

Serial No.
295,224
12 Sheets-Sheet 11

Fig. 15c

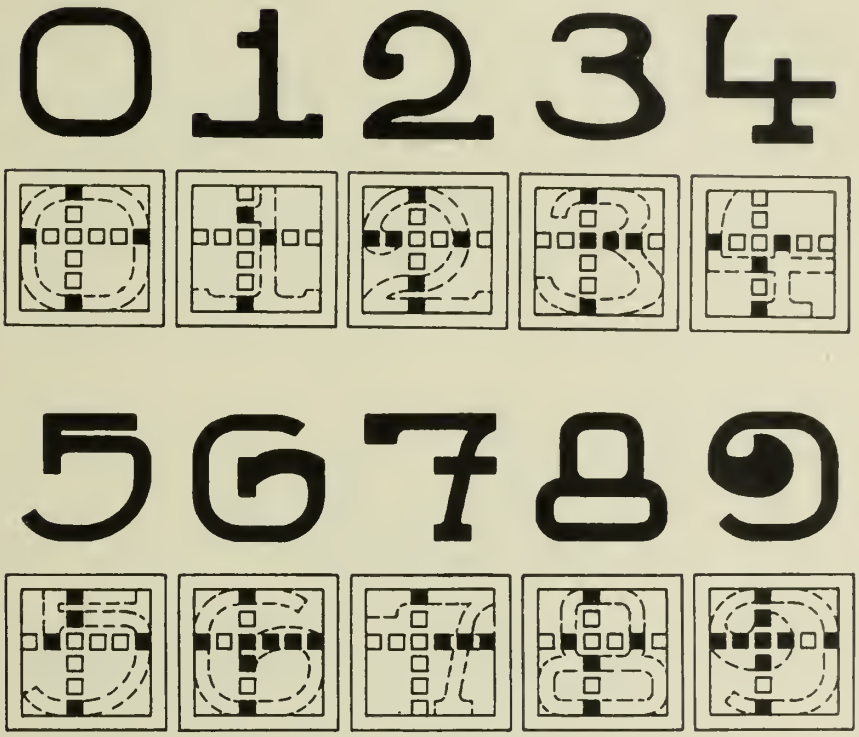

Fig. 16

INVENTOR
Michael Maul
BY
W. McMahon
ATTORNEY

PUBLISHED
MAY 25, 1943.
BY A. P. C.

M. MAUL
RECORD CONTROLLED MACHINE
Filed Sept. 16, 1939

Serial No.
295,224
12 Sheets-Sheet 12

10/28/10

Fig. 17

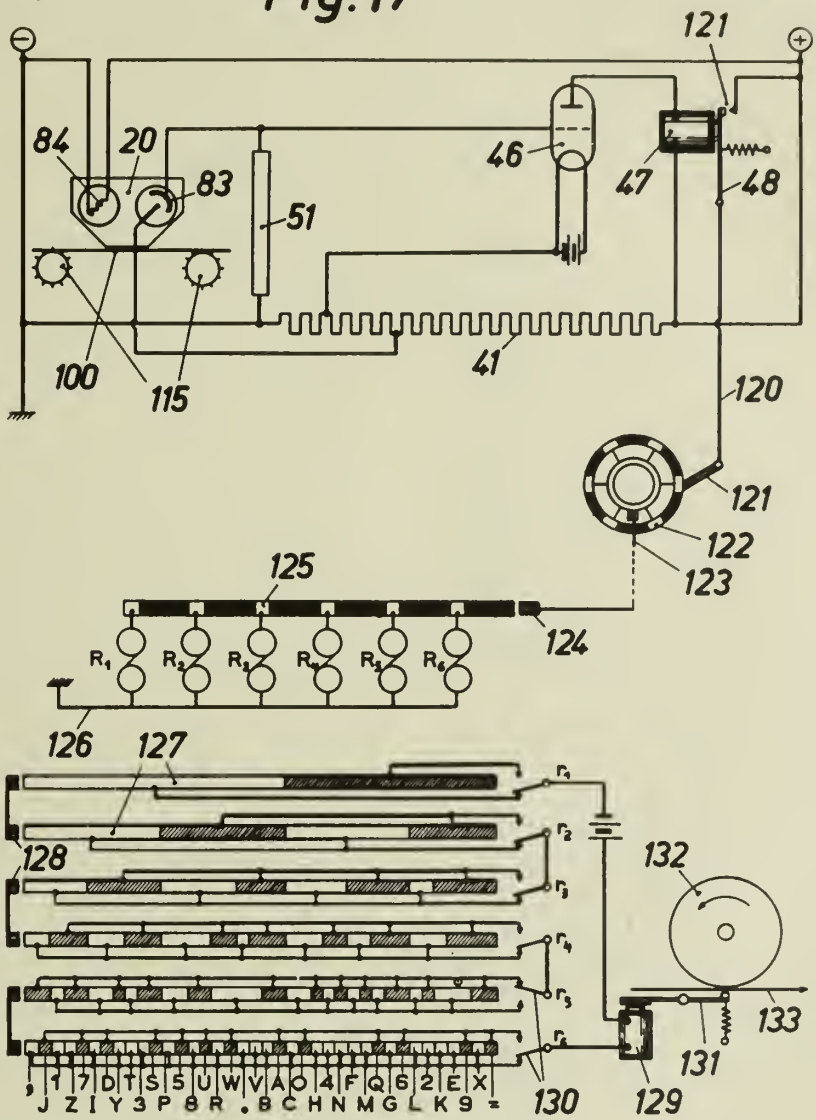

INVENTOR
Michael Maul
BY
W. M. Wilson
ATTORNEY

Published May 25, 1943

Serial No. 296,710

ALIEN PROPERTY CUSTODIAN

METHOD OF IMPROVING THE SURFACE OF METALLIC PARTS

Gustav Sembdner, Berlin-Tempelhof, Germany; vested in the Alien Property Custodian

Application filed September 26, 1939

This invention relates to metallic parts having improved wear-resistant surfaces and to methods and devices for producing wear-resistant surface layers on metallic parts, more particularly on wheels for rail-vehicles.

It is the object of the invention to incorporate wear-resistant material in such a manner into the metallic parts that its structure and strength is not changed, at least not deteriorated.

Another object of the invention is to attach or secure the wear-resistant layer to the metallic part or support in such a manner that while an undesired or inadvertent detachment or loosening is absolutely prevented, it is possible to replace or detach the wear-resistant layer with simple means, if desired.

Another object of the invention is to provide simple devices and apparatus for applying the wear-resistant layers to and for removing same from, their support.

A special object of the invention is to increase the duration of wheels and wheel sets for railway cars.

According to the invention a wear resistant strip is applied to the work piece in the form of one or several pieces and secured in position on the work piece by recessed or indented portions in the work piece and in the strip. Special closure members, such as locking rings or the like may be used additionally. The toothed engagement of the parts may be completed by a ring which is welded together with a wear resistant plating. Moreover, screw rings, bayonet fixing rings or smooth rings attached by riveting may be used for this purpose. Further, it is possible to provide the toothed engagement between the work piece and the wear resistant plating by composing the wear resistant surface of single pieces which are welded together. Moreover, it is contemplated to provide resilient insertions between the work piece and the wear resistant plating whereby it is rendered possible, for instance, to provide running wheels of steel which have a spring action.

My invention permits a great simplification in the manufacture and operation of work pieces having surfaces subjected to heavy wear and tear. For example, railway and tramway wheels, running wheels for cranes and the like can be easily and safely provided with new running surfaces when they are worn off.

The invention will be better understood by reference to the following detailed description in connection with the accompanying drawing showing by way of example and diagrammatically some embodiments of the invention, viz:—

Fig. 1 is a cross sectional view of the outer portion of a wheel rim. A profiled strip 1 of hardened steel is engaged over the rim 2 in the direction of the arrow and an open steel ring 3 is engaged in the groove 4 of the rim. Now the rims 1 and 3 are welded together by the circular weld 5. The oblique joints between the adjacent ends of the rings 1 and 3 may also be welded together if desired.

In order to remove the worn-off ring 1 the rings 1 and 3 are separated from each other by a cutting torch applied to the seam 5.

Referring now to Fig. 2, the reference numerals 1 to 5 designate the same parts as in Fig. 1. Additionally a ring 6 is provided which is threaded at 7 and screwed on a threaded portion 2 of the rim so as to engage into a dovetail portion 8 of the rim 1. The joints of the strips 1 and 3 may again be welded together if desired. It will be understood that the strip 1 is thus still more reliably secured on the rim 2.

In order to remove the ring 1 the ring 6 is unscrewed and the ring 1 is separated from the ring 3 by a cutting torch applied at 5.

Referring now to Fig. 3, the ring 1 is in this case engaged over the rim 2 in the direction of the arrow so as to engage the annular groove 9 of the rim by its inner collar 8. This is possible by the spring action of the open ring 1. The open ring is now closed at the joint by welding whereby the ring 1 is secured against inadvertent detachment. Moreover, in case of high stresses a threaded ring 6 may be applied which in this case may press against the annular surface 8 without dovetail engagement.

In order to remove the ring 1 from the rim the joint is cut and the threaded ring 6 is unscrewed.

A similar arrangement is shown in Fig. 4, however, in this case a circular ring 10 which is connected to the rim 2 by a number of rivets 11 serves as an additional securing means in place of a threaded ring 6.

In this case the ring 1 is removed by cutting the joint and withdrawing the circular ring 10 after removal of the rivets 11.

Referring now to Figs. 5 and 6 showing the wheel rim in a cross sectional and side elevation, respectively, it will be seen that the wear resistant plating is in this case made of two pieces 1′ and 1″ which are welded together at 5a. A securing ring 19 is attached to the rim 2 by means of a device which is similar to a bayonet fixing comprising claws 19′ and 2′ on the ring 19 and on the rim 2, respectively. The claws

recesses 2'' between the claws 2' and then locked behind the claws 2' by rotation through a small range. The ring 1 which is attached to the rim 2 in the direction of the arrow may be removed from the same by cutting the joint 50 and releasing the ring 19.

Referring now to Fig. 7, the annular strip in this case consists of two portions 1' and 1'' or of three portions 1', 1'', 1''', as indicated schematically in Figs. 7*a* and 7*b*, respectively. The said portions are applied on the rim 2 in the direction of the arrows in such a manner that the inner collars 12 and 13 engage into corresponding recesses of the rim 2. The two or three joints 50', 50'', or 50', 50'', 50''', are now welded together whereby a ring is formed which is tightly and reliably connected to the rim 2. In order to remove the ring portions from the rim, the joints must be cut by a cutting torch or the like.

Referring now to Fig. 8, the plating is again formed of two or three similar portions as indicated in Figs. 7*a* and 7*b*. Interposed between the plating 1 and the rim 2 are thin resilient layers of rubber, pressed material or the like as indicated at 14 and 15. The said resilient intermediate layers permit a spring action of the wheel body proper, whereby jerks are absorbed and the portion of the weight of the car which is not resiliently supported is reduced.

In this manner the wear of the car and of the rails is further reduced. Due to the interengagement of the projecting and recessed portions of the plating 1 and of the rim 2 the resilient layers 14 and 15 are enclosed on all sides to prevent them from being pressed out. Of course, some clearance will be left between the resilient layers 14 and 15 and the surrounding walls of the parts 1 and 2 so as to permit deformation and resilient action of the layers 14 and 15.

The joints of the strip 1 are welded together in order to secure the same on the rim 2, as described with reference to Fig. 7. After the strip has been worn off the joints may be cut and the strip portions removed. The resilient layers 14 and 15 may be made of heat resistant material, such as, asbestos, at least at the welded joints to prevent their destruction by the welding operation.

Fig. 9 illustrates a wheel rim 16 comprising two flanges, such as a wheel for cranes or travelling platforms. The right hand flange 17 is detachable and an open, hardened steel ring 18 can be engaged over the rim 16 in the direction of the arrow before the flange 17 is attached. The flange 17 may now be secured to the wheel body 16 again, for example, by screws, as indicated at 51. Welding of the joint of the ring 18 is not required in this case in view of the overhanging portions 16' and 17' engaging the outer circumferences of the flanges 19 of ring 18.

The embodiment shown in Fig. 10 is similar to Fig. 9 except that the overhanging flanges 16' and 17' of the parts 16 and 17 are omitted so that the ring 18 must be welded at the joint to be held tightly on the rim 16.

In the embodiment shown in Fig. 11 the wheel body 16 has two flanges formed integral with the rim and the wear resistant plating 18 is applied therein in the form of two or three ring portions which are welded at their joints in the manner shown in Figs. 7*a* and 7*b*. The ring 18 can again be removed by cutting the joints.

Figures 12 and 13 illustrate a wheel or pulley having two flanges. The wear resistant layer is successively applied to the whcel body
radial direction as shown in Fig. 13 and a
axially displaced to engage the overh
flanges 16' and 16'' of the rim 16 by m
their flanges 21 and 23.

The annular dovetail groove 14 thus
between the portions 20 and 22 is now f
in a suitable manner to prevent inad
detachment of the parts 20 and 22.
end a profiled strip 25 of a soft materi
as aluminum, lead, copper or red hot ste
be forced into the groove 24 so as to assu
cross section of the same. By way of a
tive, the groove 24 may be filled up wi
lead. It is not necessary for the joints
half rings 20 and 22 to be welded. Af
rings 20 and 22 have been worn off, the a
groove 24 may be cleared, for example by
ing out or chiseling out the ring 25 so t
half rings may be removed to the cente
opposite direction of the arrow II and wit
radially in an opposite direction of the a

It will be understood that the said re
tion of the circumference of the wheel
carried out without disassembling the w
lifting the same from the rail.

Figs. 14 and 15 show a wheel compris
flanges and a wear resistant plating for
four half rings 26 and 27 and four circul
disks 28 and 29. The said parts are inse
the wheel in the manner shown in Fig.
first the half disks 28 and 29 are insert
the grooves 30 and 31 of the flanges of
16. Now the half rings 26 and 27 are
on the wheel body 16 and moved axially
the disks 28 and 29 whereby the same
cured in position. The annular groove
formed between the half rings 26 and 27
filled up in a similar manner as shown
12. Instead of a single profiled strip 2
may be applied two strips 33 and 34 of
section as shown in Fig. 14 which is c
produce. It is not necessary for the j
the rings 26 and 27 and the disks 30 an
be welded but the said joints are advanta
mutually staggered. In order to excha
strips and disks the groove 32 is again

Fig. 16 illustrates an embodiment in
the wear resistant half rings are secur
wheel rim having one flange only. A gr
having three undercut flanks 37, 38
comprising the whole region of the runni
face is cut into the rim 35. The four w
sistant half rings 40 and 41 are appli
radial direction and then axially displa
engagement with the undercut flanks 37
The undercut open annular groove 42
closed by forcing in a profiled strip 43 by
in a soft metal or in a similar manner,
the half rings 40 and 41 are safely secure
material of the half rings may be diffe
accordance with the different stresses
portions 40 and 41. For example, the ri
tions 40 may be made of a material w
more wear resistant than the material
ring portions 41. The interchange of th
40 and 41 may be effected in the ab
scribed manner and without detaching th

Figs. 17, 18 and 19 illustrate a whe
street car in cross sectional and side vi
spectively. The wheel rim 44 is pro
shown in Figs. 16 and 18 and provided
single undercut groove 46 only. The tw
resistant half rings 47 are applied in th

tion of the arrow I as indicated in Fig. 18 and then displaced in the direction of the arrow II into engagement of the undercut groove **48** with the dovetail groove **46** of the rim, whereby a conical groove is formed between the inner surface of the flange **49** and the surface **45** of the wheel. The wear resistant ring portions **47** are now secured in position by forcing a circular wedge strip **50** into said conical groove. As shown in Fig. 19, the wedge strip **50** consists of a plurality of pieces which are inserted in succession whereby the half rings **47** are safely secured in position. The closure member **51** of the wedge ring **50** is locked against inadvertent falling out, as by insertion of a filling member **52** secured by spot welding or screws. In this manner the remaining pieces **50** of the wedge ring and thus the half rings **47** are locked against inadvertent releasing. The two oblique joints **53** of the half rings **47** need not be welded. When the half rings **47** are worn off they may be detached and exchanged by removal of the filling member **52** and by forcing out the wedge members **51** and **50**. This interchange can be effected without detaching the wheel set from the car, in such a manner that there is first interchanged the upper half ring and then, on rotation of the wheel through 180°, the lower half ring.

Figs. 20 to 22 illustrate a running wheel of a crane comprising two half rings which are applied in the manner indicated in Fig. 11, but while the two joints must be welded in Fig. 11, the ends of the two half rings **54** according to Figs. 20 to 22 are tightly secured to the wheel rim **61** by means of a wedge or dovetail joint so that the two oblique joints **55** do not require to be welded.

Fig. 20 is a cross sectional view of the wheel rim **61** on line A—A. Fig. 21 is a fragmentary longitudinal section through the rim on the joint **55** of the half rings, on the line B—B. Fig. 22 shows a plan view on the same joint with the half rings omitted. The grooves **56** which are undercut on one side are worked into both ends of the two half rings **54**.

Provided in the wheel rim **61** are four undercut oblique grooves **57** in which the four wedge members **58** are guided. The wedge members **58** carry a hook-shaped projection **59** each on their upper side which engages the grooves **56** as the wedge members **58** are forced in and thereby secures the half rings **54** at their ends with the wheel rim **61**. The bores **60** permit the introduction of a tool for forcing out the wedges **58**.

In any of the above described embodiments where half rings are to be welded at their joints the dovetail joints described with reference to Figs. 20 to 22 may be used instead of a welded joint whereby the interchange of the half rings is greatly facilitated and welding and cutting of the welds is rendered unnecessary.

The wear resistant plating may be steel which is improved or alloyed in any known manner, for instance, manganese steel containing 12–14% manganese, steel containing chromium and nickle or vanadium. Other than steel alloys may also be used, for instance, metals of the hard metal group, such as tungsten carbide or the like. Furthermore, where the wear is due to chemical attacks, platings of anti-corrosive or non-rusting material may be employed. The coefficient of thermal expansion of the wear-resistant material should be at least approximately similar to the corresponding coefficient of the metallic support. When applied to a wheel my invention offers the special advantage that the wear resistant plating may be exchanged with the wheel in operative position whereby time and labour is saved.

The method of the present invention has been described in detail with reference to specific embodiments. It is to be understood, however, that the invention is not limited by such specific reference but is broader in scope and capable of other embodiments than those specifically described and illustrated in the drawing.

GUSTAV SEMBDNER.

PUBLISHED

MAY 25, 1943.

BY A. P. C.

G. SEMBDNER

METHOD OF IMPROVING THE SURFACE OF METALLIC PARTS

Filed Sept. 26, 1939

Serial No. 296,710

3 Sheets-Sheet 1

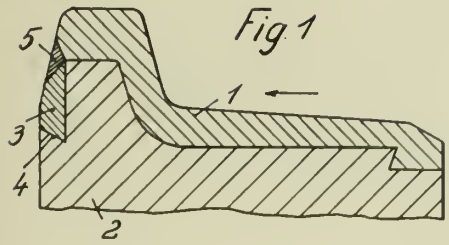

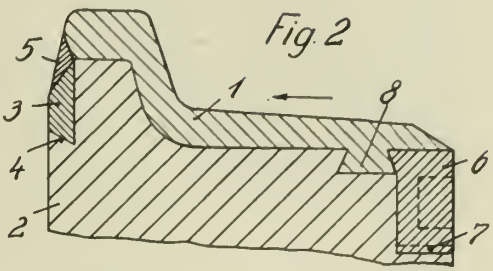

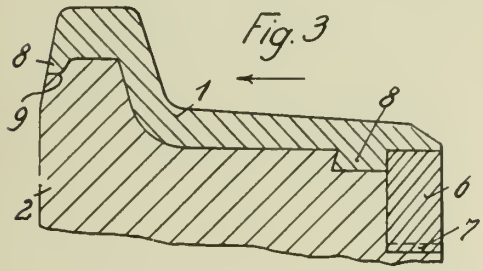

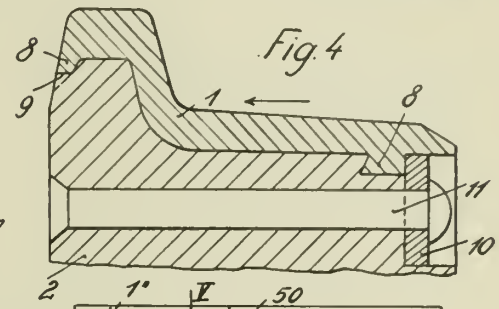

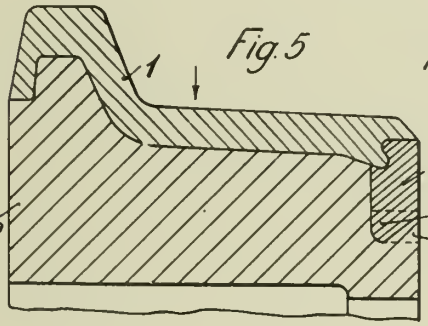

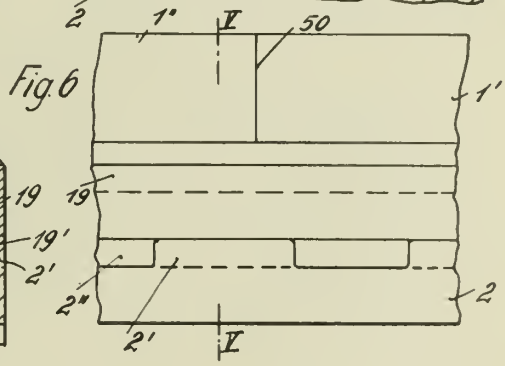

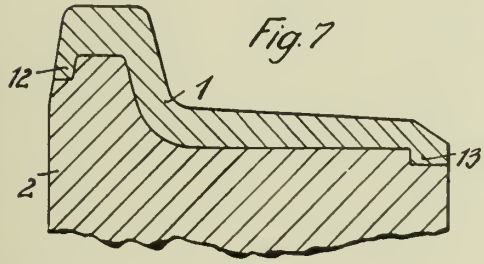

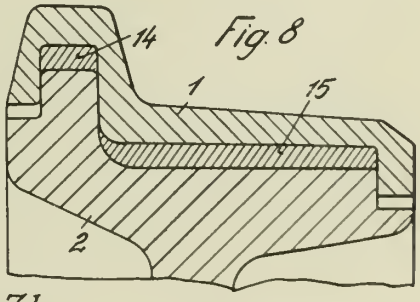

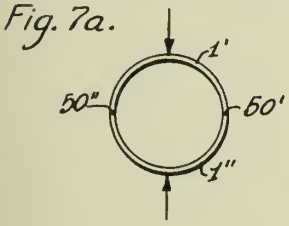

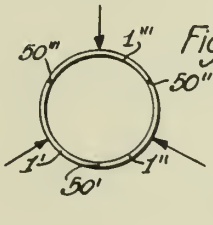

Inventor:
Gustav Sembdner
By John B. Brady
Attorney

PUBLISHED

MAY 25, 1943.

BY A. P. C.

G. SEMBDNER

METHOD OF IMPROVING THE SURFACE OF METALLIC PARTS

Filed Sept. 26, 1939

Serial No. 296,710

3 Sheets-Sheet 2

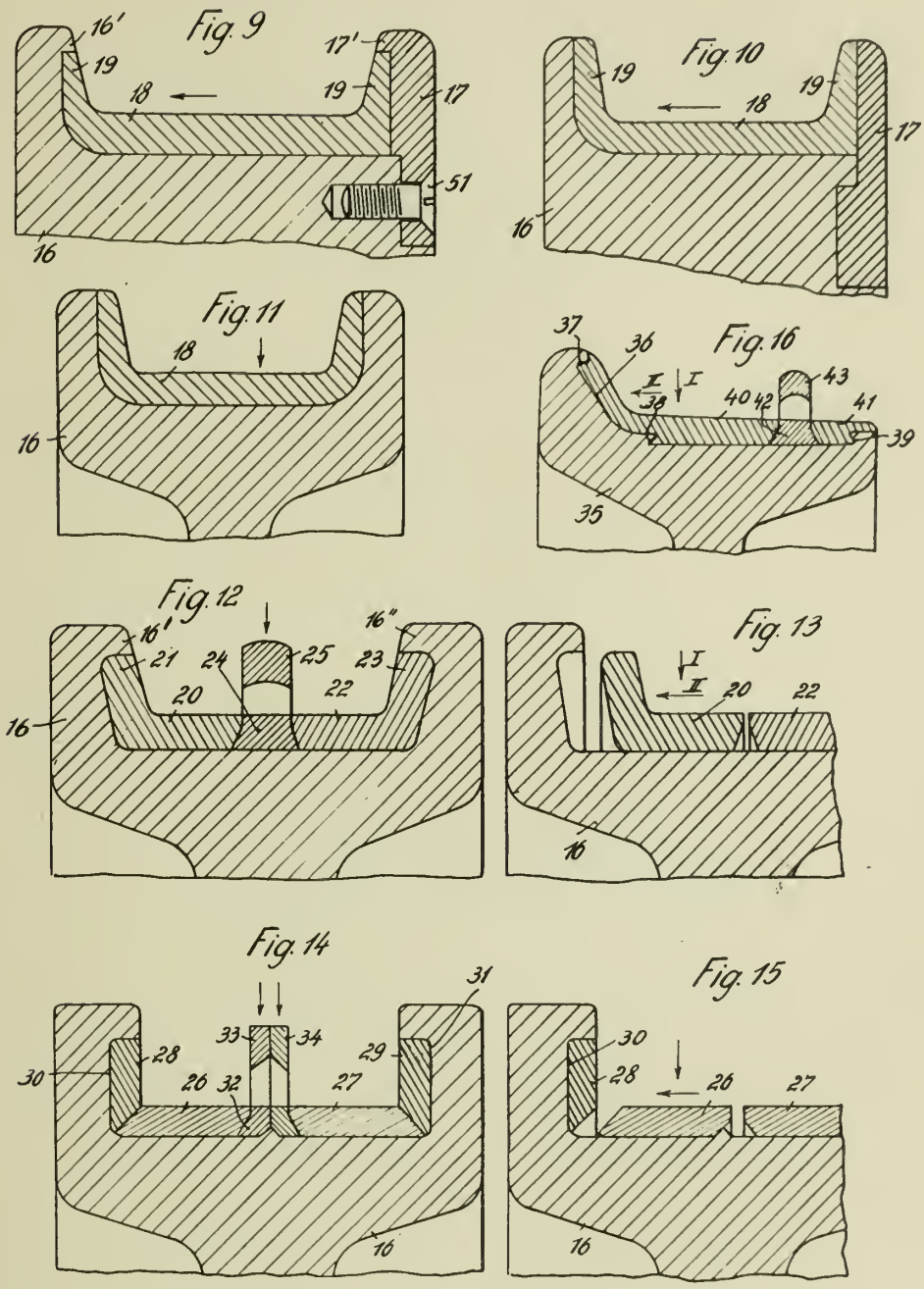

Inventor:
Gustav Sembdner

By John Q. Brady
Attorney

PUBLISHED

MAY 25, 1943.

BY A. P. C.

G. SEMBDNER

METHOD OF IMPROVING THE SURFACE OF METALLIC PARTS

Filed Sept. 26, 1939

Serial No. 296,710

3 Sheets-Sheet 3

Fig. 17

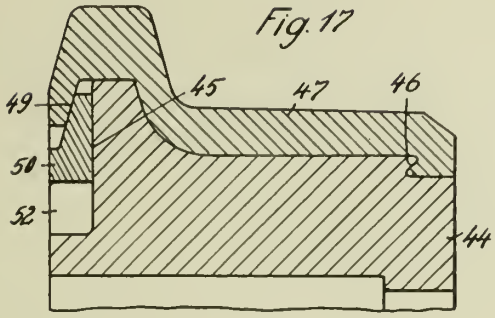

Fig. 20

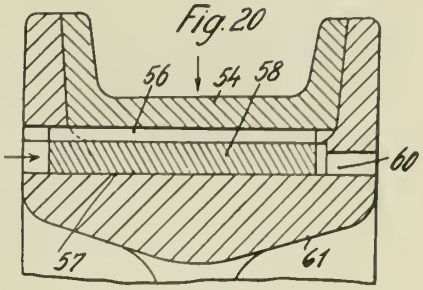

Fig. 18

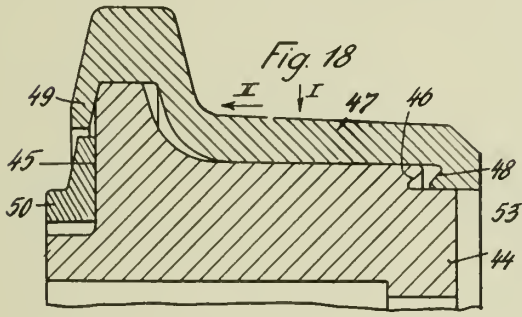

Fig. 19

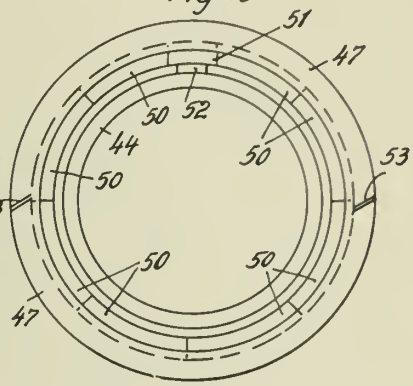

Fig. 21

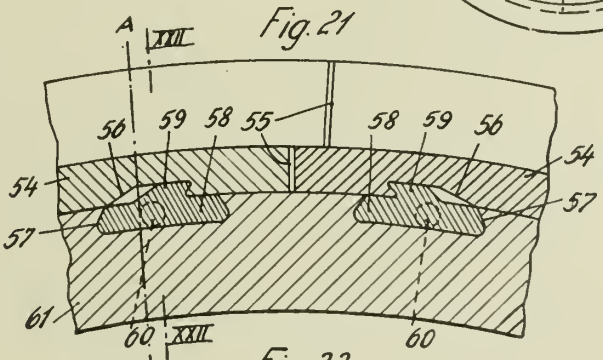

Fig. 22

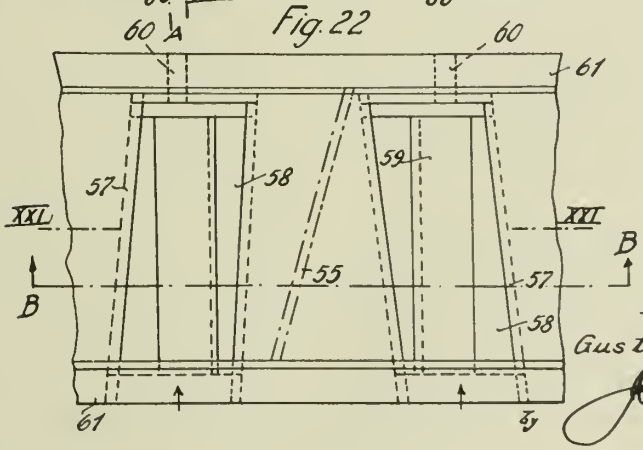

Inventor:

Gustav Sembdner

John Q. Grady

Attorney

Published May 25, 1943

Serial No. 297,006

ALIEN PROPERTY CUSTODIAN

MEASURING INSTRUMENT FOR DETERMINING THE ORBITAL ACCELERATION AND THE FUNCTIONS THEREOF

Carl von den Steinen, Hamburg 1, Germany; vested in the Alien Property Custodian

Application filed September 28, 1939

The invention relates to measuring devices, and it is the object of the invention to provide a device which measures the so-called orbital acceleration of a ship.

It is well known that the waves exert forces on the ship in consequence whereof movements of the ship take place. These movements consist of rotary oscillations, the axes of rotation passing through a fixed point of the ship's body, and of a parallel displacement (translation) of the ship around this point. As the latter movement generally takes place along a curved approximately circular line, it is termed an orbital movement, and its accelerations are termed orbital accelerations.

Heretofore, as far as I am aware, it has only been known to calculate the orbital acceleration from other measuring values instead of measuring it directly.

It is therefore the object of the invention to measure the orbital acceleration directly. According to the invention, a measuring device for determining the orbital acceleration or functions thereof comprises, in combination, a first instrument for measuring the vector of the gravity acceleration, a second instrument for measuring the vector of the apparent gravity acceleration and a recording appliance coupled with said first and second instruments for registering the vector of said orbital acceleration as the difference between said vector of the apparent gravity acceleration and said vector of the gravity acceleration.

A measuring device permitting the orbital acceleration or functions thereof to be read off directly as measuring value or diagram is particularly valuable in connection with the distinguishing of forces exerted on a vessel by the movements of the sea and of the chronological course of such forces. The measuring of the orbital acceleration and of the functions thereof affords the possibility of investigating the connections—hitherto to a great extent unknown—between movements of the sea, shape of vessel, travelling speed and travelling direction, and of drawing conclusions therefrom in regard to the effects on the stability of the vessel by the respective motions of the sea. In addition, the measuring of the orbital acceleration and the functions thereof is important in connection with questions concerning the stabilization of ships.

The invention will be more clearly understood by reference to the accompanying drawings. It is to be understood, however, that the description is not to be taken in a limiting sense, the scope of the invention being defined in the appended claims.

Fig. 1 shows a vector diagram which serves to represent the acceleration vectors cited in connection with the invention.

Fig. 2 shows a measuring device according to the invention.

Fig. 3 shows an instrument for measuring the apparent gravity acceleration, by which the corresponding instrument of the device shown in Fig. 2 may be substituted.

To begin with, the terms frequently occurring in the following may be explained and defined with reference to the vectorial diagram shown in Fig. 1.

If the gravity acceleration g is represented in the vertical by the vector I and the orbital acceleration to be measured is joined thereto as vector II, the resultant vector III represents the value g', this being the apparent or the effective or the relative gravity acceleration. Z represents the vertical axis of the ship. The angle between the vertical I and the ship's vertical axis Z is the absolute rolling angle φ_1. The angle between the apparent vertical III and the ship's vertical axis is the effective rolling angle φ_2, this being a function of the orbital acceleration. The difference between the absolute and the effective rolling angle, i. e. the angle between the vertical and the apparent vertical, is defined as effective wave slope ϑ. This is based upon the perception that the resultant g' of the acceleration, viz, the apparent vertical III, must always assume a normal position relative to the water surface.

Finally, the angle between the vertical I and the orbital acceleration vector II is the wave frequency angle δ, the vector II rotating with the wave frequency

$$\omega=\frac{d\delta}{dt}$$

Essential as regards the invention is the term dipping acceleration b_t, i. e. the difference between the effective gravity acceleration g'—represented by the vector III—and one component of the true gravity acceleration g represented by the vector I, this component being taken in the direction of the vector III. The dipping acceleration b_t is of course likewise a function of the orbital acceleration b. It is $b_t=g'-g$, if the angle δ is small.

The measuring device of the invention is characterized by two measuring instruments, of which the first represents the vector I of the gravity acceleration and the second the vector of the apparent gravity acceleration. Two such

measuring instruments may be combined simply in such manner that the orbital acceleration to be determined is registrable as the revolving differential vector of the vectors III and I. The simplest apparatus serving to represent the gravity acceleration may consist in a system governed by a vertical gyroscope and stabilized so as to render its position independent of the position of the ship. The apparent vertical vector may be represented in various ways. For instance an acceleration meter may be used, the measuring direction of which is automatically directed into the apparent vertical direction and whose measuring value may be read off as a line of displacement proportional to the acceleration. The measuring of the acceleration in the direction of the apparent vertical has heretofore never been undertaken at all. This measuring, however, even apart from the representation of the apparent vertical vector in the sense of the present invention, is very valuable also in cases where merely its course in time is registered with a view to deducing therefrom the dipping acceleration b_t by shifting the abscissa by the amount g. The vector of the apparent vertical may, however, be likewise determined by means of two accelerometers operating in a plane vertical to the ship's longitudinal axis in order to measure the components of the vector III, the measuring values being brought into relation to one another by means of a suitable mechanical or electrical appliance thus representing the direction and the magnitude of the resultant vector III.

It is advantageous according to the invention to have the measuring instrument consist in two co-axially supported systems of which one is automatically directed into the true vertical direction and the other into the apparent vertical direction. The relative movement of these two systems may be directly recorded dependent on time whereby the practically very important chronological course of the effective wave slope is obtained. If the acceleration meter is arranged on the apparent vertical device in such a way that the device's center of motion is determined by the zero deflection of the accelerometer, the deflections of the accelerometer may be registered on the vertical system, the result obtained being a polar diagram, whose radial vector is the apparent vertical acceleration g' and whose argumental wave slope ϑ. If the pole of this polar diagram is shifted by the amount of the constant vector of the gravity acceleration g, the direct result is the polar diagram of the orbital acceleration, this being dependent on the argument of the wave frequency angle δ.

The apparent vertical system may consist either in an accelerometer operating in the direction of the apparent vertical or a mechanical or electrical appliance producing the resultant of the vector of the apparent gravity acceleration.

In Fig. 2 is represented a measuring device according to the invention. The device consists of a first system or instrument **21** for measuring the vector of the gravity acceleration, this instrument being a gyro-vertical with a frame **22**, the latter being rigidly mounted around an axle **23**, which is stable relative to the ship's body and parallel to the ship's longitudinal axis. The axle **23** is rigidly connected with an appliance **24** having the shape of a long-stretched rectangle the long sides of which always run in the direction of the true vertical as the axle of the gyro-rotor alwayse runs in the true vertical direction.

Two fixed points **26** and **27** are marked on the while **26** lies a distance g from the poi
representing the gravity acceleration. T
joining **26** and **27** is parallel to the long
the rectangle of the appliance and alwa
in the direction of the true vertical, so
represents the vector g of the gravity a
tion. When the gravity acceleration g
the point **26** coincides with the point
therefore the point **27** represents the zer
tion of the instrument for determining th
ity acceleration.

The second system or instrument for
ing the vector of the apparent gravity a
tion consists of the elements **1—20**. T
essential element is the pendulum **1**, v
mounted about an axle **2** supported by
3 which is rigidly connected with the shi
The axle **2** has the direction of the ship
tudinal axis. The pendulum **1** tends t
itself automatically into the apparent
According to the invention, an accele
10—20 is provided, which is automatic
rected into the apparent vertical by m
the pendulum **1**. For this purpose the f
of the accelerometer is rigidly mounted
an axle **9**, the axes of rotation of **9** ar
being identical. The axle **9** is fixedly su
relative to the ship's body. The axle **9** i
connected to a segment **8**, engaging a
wheel **7**, so that the axle **9** is turned
with the frame **10**, when said segment is
The worm-wheel is fixedly supported to
of an electro-motor **6**, which is controlle
pendulum **1**. The speed of the motor
adjusted by means of a potentiometer re
5, this latter being mounted on the fran
forming a part of the circuit of said mo
shown). The resistance can be varied b
of a stap **4**, which is rigidly connected
pendulum **1**. Therefore, if the pendulum
the motor is controlled and conseque
segment **8** is engaged, so that the axle
to an extent permitting the frame **10** t
rected into the apparent vertical.

The frame **10** contains two rods **11** an
which a member **14** is slideably moun
member engaging a screw spindle **13**, wh
be rotated by means of an electro-motor
member **14** carries a spring **15** which is co
with a heavy substance **16**, this substan
slideably mounted about the rods **11** an

The frame **10** is provided with a poten
resistance **18**, which forms a part of the
circuit of the motor **19** (not shown), thus
ing the motor if a tap **17** of the poten
slides along it. The tap **17** is attache
heavy substance **16** and is deflected if th
16 slides along the rods **11**, **12**. The me
is provided with a pen **20**.

The accelerometer operates as follow

As the spring **15** is automatically dire
the apparent vertical, the length of th
between said member **14** and said weigh
resents the apparent gravity acceleratio
g' has the constant value g for some t
tap **17** is so placed that the motor is at
still. The distance of the pen **20** from t
27 then corresponds to the gravity accel
and if the true and the apparent verti
the same direction, the pen **20** will also
26. If g' increases or diminishes, the
move downwardly or upwardly, resp
thereby causing the motor to turn in
or other direction causing the member **1**

up or down according to the rotation of the screw spindle 13.

If g' increases, the member 14 slides upwardly, i. e. it slides so as to approach the motor 19. Together with the movement of the member 14 a corresponding movement of the tap 17 takes place. The sliding movement will cease as soon as the tap has again reached the first position, when g' was equal to g. Now the distance of the pen 20 from 27 is equal to the increased value of g'. Therefore, the line joining the point 27 and the point of the pen 20 represents the vector of the apparent gravity acceleration.

The appliance 24 is provided with a sheet 25, whereupon the pen 20 records a diagram 26' which is the diagram of the orbital acceleration, as the vector from the point 26 to any point of the diagram 26' represents the difference between the vector of the apparent gravity acceleration and the vector of the gravity acceleration, i. e. the vector of the orbital acceleration.

As it is desirable to record the wave slope ϑ chronologically, a second appliance 29 is provided consisting of a registering strip 29 guided around the rollers 30 and 31. The appliance 29 is coupled with the means for automatically adjusting the first system in the direction of the true vertical and the second system in the direction of the apparent vertical. A pen 28 is further provided, said pen being rigidly mounted on the frame 10. As the angle between the angular deflections of the first system 21, 22 and the second system 1—20 is equal to the angle ϑ of the effective wave slope, the pen 28 records on the appliance 29 the effective wave slope ϑ when the strip 29 is moved with constant velocity.

In Fig. 3 is shown an instrument for measuring the apparent gravity acceleration comprising two accelerometers for measuring two components of said vector, the components lying in a plane vertical to the ship's longitudinal axis.

The first accelerometer which corresponds to the accelerometer shown in Fig. 2 comprises a frame 110, which is in rigid connection with the ship's body. Two rods 111 and 112 are slideably arranged within the frame, which rods bear a slideably mounted heavy substance 116, this latter being connected by means of a spring 115 to a guide member 114 which is rigidly connected with the rods 111 and 112. The guide member 114 is also connected with a screw spindle 113 engaging a gear wheel 145, which is supported by the frame 110 (not shown). The gear 145 engages another gear wheel 146, the latter being driven by an electro-motor 119 by which said screw spindle is rotated in consequence whereof the member 114 is moved together with its rods 111 and 112 in the direction of these rods. The motor is controlled by a potentiometer 118 the tap 117 of which is rigidly connected to the weight 116.

The first accelerometer acts in exactly the same manner as the accelerometer 10—20 shown in Fig. 2. Therefore the length of the spring 115 or the position of the member 114 represents the component of the vector of the apparent gravity acceleration in the direction of the rods 111 and 112, which may have the direction of the ship's vertical.

The second accelerometer is similar to the first one and consists of the pendulum 216; this is rotatably mounted about the axle 202, which is parallel to the ship's longitudinal axis. The pendulum is connected by means of a spring 215 to a guide member 214, which is mounted on rods 211 and 212 and supported by a screw spindle 213, which is driven by a motor 219, said motor being controlled by a potentiometer 205 the tap 204 of which is connected with the pendulum 216. The screw spindle 213 and the axle 202 are fixed relative to the ship's body. The screw spindle 213 lies in a plane vertical to the ship's longitudinal axis, as is also the case with rods 111 and 112. Therefore, the length of the spring 215 or the position of the member 214 represents another component of the vector of the apparent gravity acceleration, said component being vertical to the first component.

In order to obtain the vectorial sum of these two components, mechanical means are provided. For this purpose, the guide member 114 has a slot 141, in which a member 140 is slideably mounted. The guide member 214 has a slot 241 with a member 240 slideably mounted within the slot. The member 140 comprises an opening while the member 240 bears an axle 242, and both accelerometers are coupled in such a manner that said axle passes through said opening; said axle likewise passes through an opening of a member 240', this member being mounted in a slot 241' of a guide member 214' which is parallel to the guide member 214.

The member 214' is rigidly connected with an axle 245, which has a fixed position relative to the ship's body, the direction of said axle being parallel to the ship's longitudinal axis.

The whole system operates as follows:

If g and g' have the same value and the same direction, the members 140, 240, 240' are situated in the center position of their respective slots whereby the member 240' is removed from the axle 245 by the distance g. If g' changes, the member 240' will assume a position in which the vector joining the member 240' and the axle 245 represents the vector of the apparent gravity acceleration, as one component of this vector is determined by the position of the member 114 and the other component by the position of the member 214. In other words, the direction of the slot 241' is the direction of the apparent vertical, and the position of the member 240' within this slot corresponds to the length of the vector of the apparent gravity acceleration.

Therefore, the system shown in Fig. 3 is suitable for substituting the corresponding instrument of the embodiment shown in Fig. 2 for measuring the apparent gravity acceleration.

CARL VON DEN STEINEN.

PUBLISHED

MAY 25, 1943.

BY A. P. C.

C. VON DEN STEINEN

MEASURING INSTRUMENT FOR DETERMINING THE ORBITAL ACCELERATION AND THE FUNCTIONS THEREOF

Filed Sept. 28, 1939

Serial No. 297,006

2 Sheets-Sheet 1

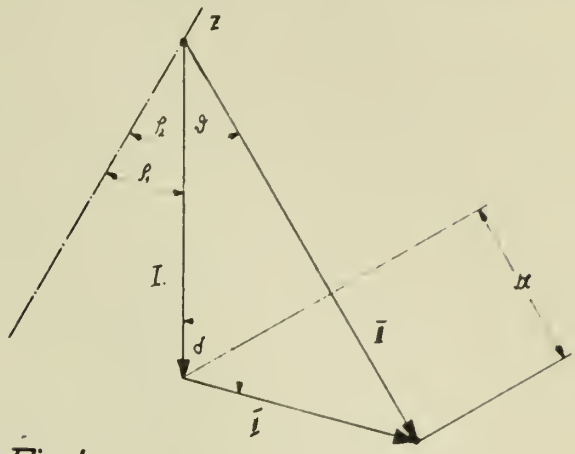

Fig. 1

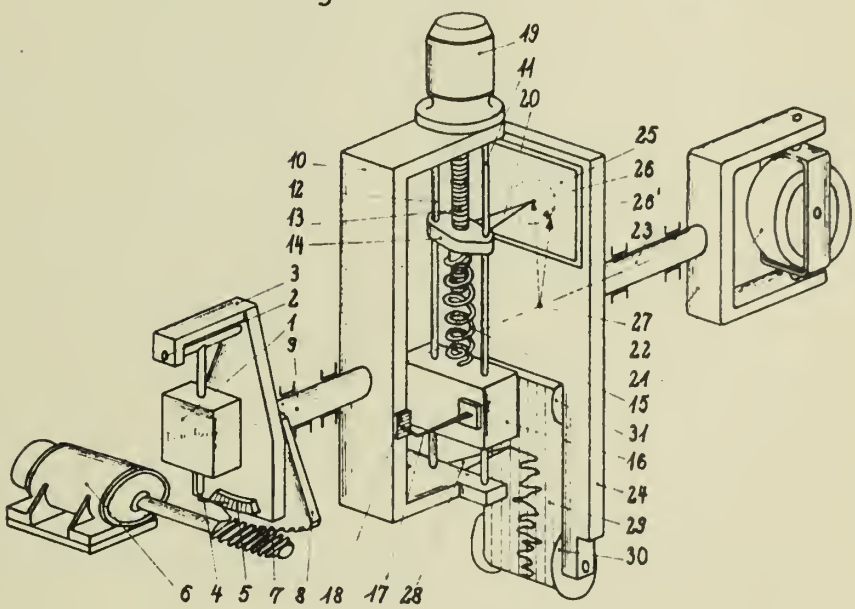

Fig. 2

Inventor
Carl von den Steinen

By A. P. Adams

Attorney

PUBLISHED

MAY 25, 1943.

BY A. P. C.

C. VON DEN STEINEN

MEASURING INSTRUMENT FOR DETERMINING THE ORBITAL ACCELERATION AND THE FUNCTIONS THEREOF

Filed Sept. 28, 1939

Serial No. 297,006

2 Sheets-Sheet 2

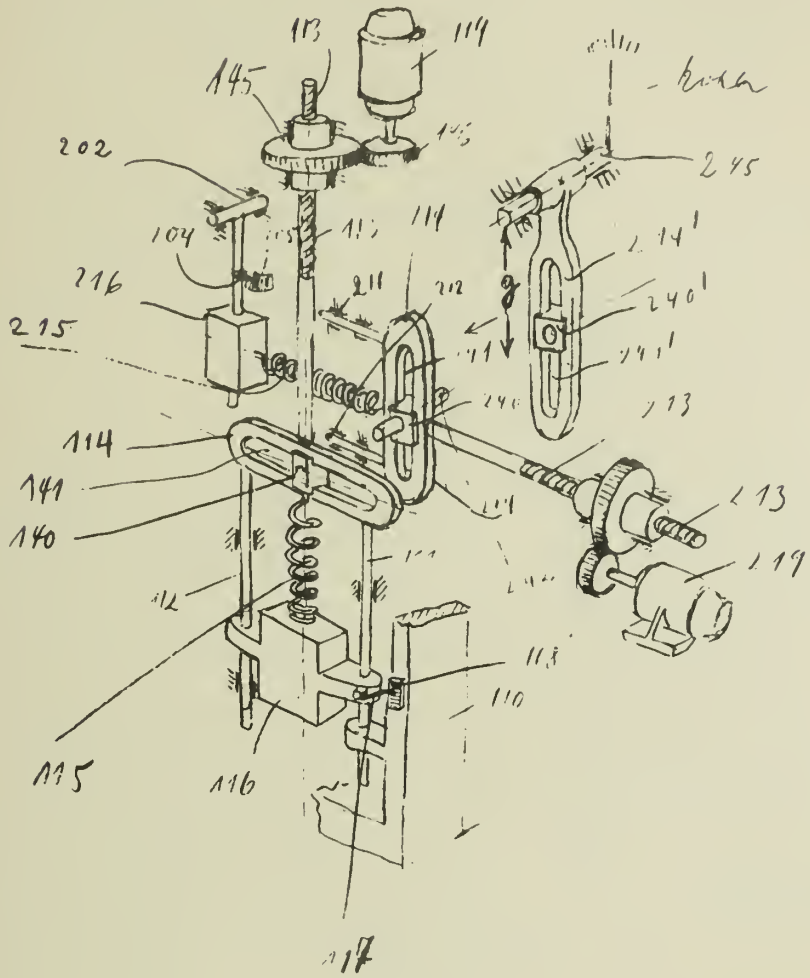

Fig. 3

Inventor

Carl von den Steinen

By A. D. Allemus

Attorney

Published May 25, 1943

Serial No. 297,010

ALIEN PROPERTY CUSTODIAN

METHOD OF FILLING BUTTER INTO RECEPTACLES IN WHICH IT SHALL BE KEPT FOR STORAGE OR SELLING PURPOSES

Niels Kjaergaard-Jensen, Harald Jensen and Hugo Hedemann, Hillerod, Denmark; vested in the Alien Property Custodian

No Drawing. Application filed September 28, 1939

The filling of butter into receptacles in which it shall be kept for storage or selling purposes has hitherto been effected in such a manner that the butter is either filled into the receptacle, such as a cask, by hand or is pressed in a machine to the shape of a bar or string of desired section which is afterwards cut to sectional portions of required length and inserted into the receptacles.

According to these methods the work is, in either case, performed under conditions that are not altogether satisfactory from the point of view of hygiene, and by the pressing of the butter to the shape of a bar or string a change of the physical state of the butter will often be thus effected that the durability is thereby impaired.

The present invention relates to a method by which the elimination of the aforementioned drawbacks is attempted, that is a method the performance of which is perfectly hygienic and by which a change of the original condition of the butter is unfailingly avoided.

The method consists in such a consistency being imparted to the butter by slow heating that it can flow fairly easily as a continuous stream, after which it is made to flow direct into the receptacle or receptacles provided for this purpose. Owing to its special consistency the butter will then automatically and completely fill up the hollow space of said receptacle and adapt itself to the shape of same.

By the said heating of the butter the temperature of same is raised to about 18–25° C., and this heating may be effected in any kind of apparatus suitable to the purpose and preferably having a rotary motion. The drawing of the butter from said apparatus may be effected under pressure.

NIELS KJAERGAARD-JENSEN.
HARALD JENSEN.
HUGO HEDEMANN.

Published May 25, 1943

Serial No. 297,370

ALIEN PROPERTY CUSTODIAN

METHOD AND APPARATUS FOR INCREASING THE OUTPUT OF SHAFT FURNACES, ESPECIALLY BLAST FURNACES

Franz Bartscherer, Duisburg-Hamborn, Germany; vested in the Alien Property Custodian

Application filed September 30, 1939

It is known that the output of shaft furnaces, especially blast furnaces, increases not in proportion to the increase in the hearth surface area but less. This is due to the fact that the blast entering radially through the tuyeres only penetrates to a certain depth into the furnace. Therefore, only an annular space is provided with the necessary quantity of air for combustion, whereas only an insufficient quantity of air for combustion is supplied to the inner circular area of the furnace.

An obvious procedure is, to increase the blast pressure so that the air penetrates to the middle of the furnace. However, the general increase in the blast pressure is accompanied by the disadvantage that too much air is blown into the outer annular space so that here a cooling effect occurs which makes an increase in output impossible or even reduces the output and thus renders the running of the furnace uneconomical.

The present invention relates to a method and a tuyere for producing higher outputs in shaft furnaces, especially blast furnaces. It consists in the multiple section construction of the tuyeres in such a manner that not only blasts of different pressure can be injected at the same time but, if desired, air of different pressure or different temperature or with different content of oxygen is injected selectively combined in such a manner that at least one of the blasts has such a high pressure that the air reaches the middle of the furnace.

The great advantage of this method is that a blast of the ordinary pressure can be introduced for supplying the outer annular surface of the hearth cross-sectional area with the necessary air for combustion, but at the same time a blast can be introduced which possesses the necessary pressure and other properties which make it suitable for causing and accelerating the desired combustion and reduction processes in the interior of the furnace.

The blast destined for the middle of the furnace is preferably enriched with oxygen and more strongly heated, so that the combustion and reduction processes are accelerated and an increase in the output of the furnace is attained.

To ensure that the blast penetrates as deeply as possible into the furnace in the sense of this method, a tuyere is used according to the invention which consists of several sections and is constructed from a flow technical point of view so that an air current which remains united as long as possible can penetrate into the interior of the furnace. For this purpose one or more tuyeres are arranged mutually shiftable and adjustable within an ordinary tuyere so that the nozzles of the tuyeres project into the furnace in different planes.

A form of construction of a two section tuyere is illustrated by way of example in longitudinal section in the only figure of the accompanying drawing.

The cooling box let into the masonry of the blast furnace is designated by *a*, the outer section of the tuyere by *b* and the inner section by *c*. Blast at normal pressure enters through the pipe connection *d*, whereas a blast with a higher pressure and temperature, if desired enriched with oxygen, is introduced through the rigidly mounted pipe *e*. The inner tuyere section *c* is shiftable relative to the outer tuyere section *b*, the mutual adjustment being effected by a fitting *f* supported by a lug *g* on the pipe *e*. The extent of the relative adjustability of the two tuyere sections *b* and *c* is determined by the distance *v*.

The mutual arrangement of the individual tuyere sections has no bearing on the scope of the invention, they may be arranged concentrically or eccentrically, horizontal or at an incline to one another.

FRANZ BARTSCHERER.

PUBLISHED

MAY 25, 1943.

BY A. P. C.

F. BARTSCHERER

METHOD AND APPARATUS FOR INCREASING THE OUTPUT OF SHAFT FURNACES, ESPECIALLY BLAST FURNACES

Filed Sept. 30, 1939

Serial No. 297,370

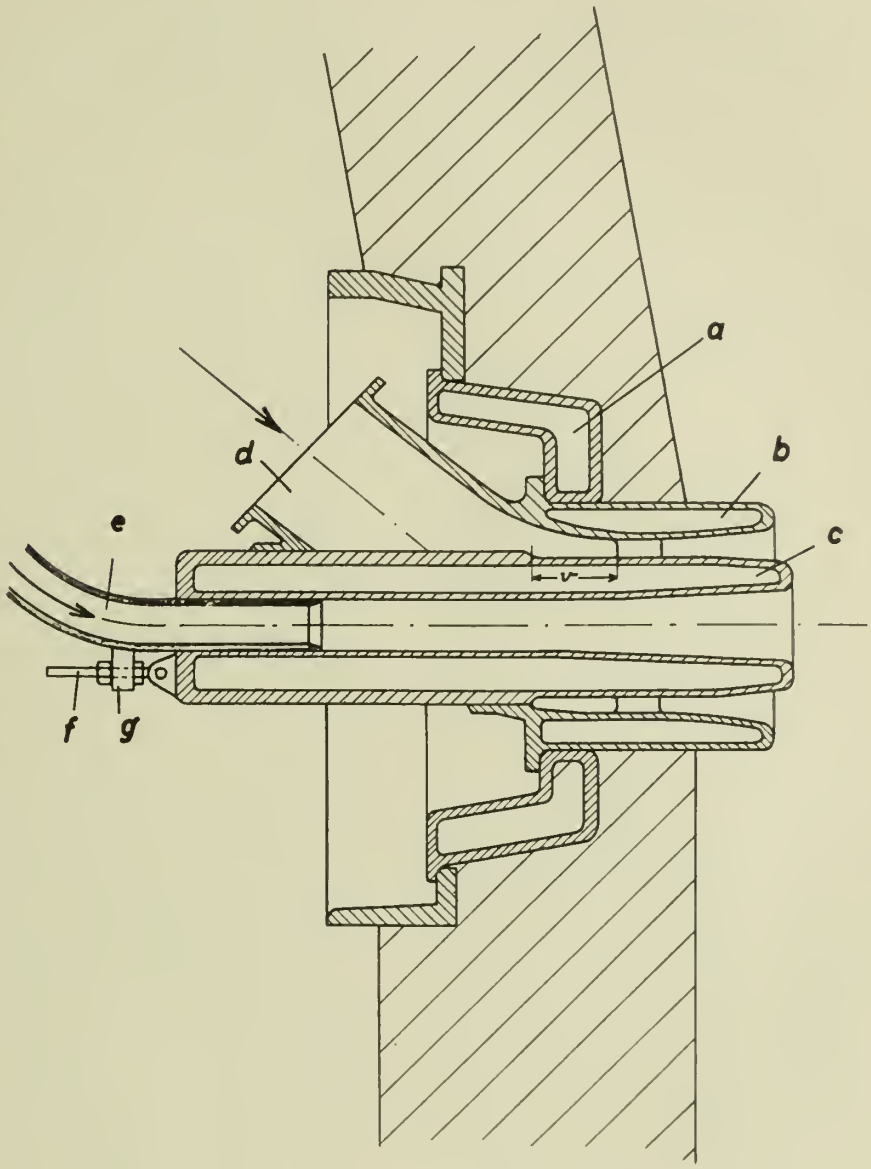

Inventor:
F. Bartscherer

By: Glascock Downing & Seebold
Attys.

Published May 25, 1943

Serial No. 297,773

ALIEN PROPERTY CUSTODIAN

ASTRONAUTIC VEHICLE

Luigi Gussalli, Brescia, Italy; vested in the Alien Property Custodian

Application filed October 3, 1939

The present invention relates to vehicles capable of going through intersideral space. All the systems which have been studied heretofore for this purpose are based on the assumption that the apparatus possesses, when starting from the earth, a given reserve of fuel, with no possibility of being fed in the space. Said reserve must be calculated in relation to the initial mass which must be employed to bring a final mass equal to one out from the action of the earth field, which gives, abstracting from the resistance afforded by the air, an enormous mass, according to the actual theory of the ratios of masses. According to this theory the apparatus at start ought to be given such a weight, that it could not be realised by known means; upon this fact depends the apparent impossibilty of the solution of astronautic problems.

The system according to this invention meets this difficulty owing to its possibility of being fed with energy in the space.

Said system is based upon the employ of double-reaction propulsion apparatus, of the Gussalli type, wherein the jet issuing from the tube is directed on the vanes of a turbine wheel, which, instead of taking the energy from the gases, abandoning the same at a reduced speed, turns said gases in an opposite direction and rejects the same with an increased speed, communicating energy to the same. This energy, which must be supplied, therefore, in addition to that developed by the gases issuing from the tube, to feed the machine, is taken, according to the invention, from the sun, in order to reduce the mass consumption to a minimum; the system is thus characterised by the combination of at least two of these propulsion apparatus with a system of two generators comprising particularly:

(1) A closed-cycle solar generator, without losses, which feeds the motors to maintain the rotation of the vane wheels, the vapour which feeds the motors being conveyed again to the generator through a condenser.

(2) A second open-cycle solar vapour generator which feeds all the tubes acting on the vane wheels.

Advantage is taken from the property afforded by the double-reaction propulsion apparatus, according to which it is possible to subdivide their total power within a very wide range between the motors for driving the vane wheels and the tubes so as to give the open-cycle generator the most reduced power in relation to the open-cycle generator, so as to reduce as much as possible the consumption of the fluid transformed and, thereupon, the quantity of fluid to be supplied to the vehicle at the start.

The closed-cycle generator consists, according to the invention, of two parallel plates disposed very near to one another, facing one another and having a suitable surface area, one of said plates being of metal, whilst the other is made of an athermanous material such as spun glass, asbestos or the like, of a very little weight. The surface exposed to the sun, or anterior surface of the metal plate is completely black to absorb all solar radiation which it receives and bears a great quantity of very light thin metal tubes soldered thereupon, connected at one end to the supply conduit of the vane wheel motors and at the other end to the conduit from the condenser into which the fluid utilised by the motor discharges; the back side is coated by a very thin layer of an athermanous material and behind the same, with respect to the direction of the sun beams is disposed the plate completely made of athermanous material whereof the surfaces are bright white or silvered; this plate may be placed either in contact with the metal plate, or somewhat removed from the same, the interspace between the two plates assisting in preventing the metal plate exposed to the sun from growing cold. This construction affords a slightly lower efficiency than that of a generator wherein the metal plate is shielded against the action of ventilation, also on the front surface side, by glass or like plates adapted to be traversed by the sun radiations; this drawback, which, however, is not much considerable, the vehicle being intended most for travelling in the vacuum, is largely compensated by the enormous reduction of weight, which only allows to attain the results which will be described further.

For the open cycle generator, wherein a very high pressure is to be given to the vapours in order to reduce the supply thereof for a predetermined power, it is preferable to have resort to an arrangement with parabolic cross-section cylindric mirrors, wherein the centre line of each black surfaced tube of the generator coincides with the focal axis of one of the mirrors, said arrangement permitting to considerably surheat the vapour. The tubes of this generator are connected at one end to the feeding tubes of the nozzles and at the other end to a conduit from a tank placed on the vehicle, adapted to supply to the generator a quantity of fluid corresponding to the vapour discharged by the vane wheels into the atmosphere on the space. According to one of the features of the invention, the tubes may

by thin glass shields forming with the tubes and between one another two annular chambers, the outer chamber being filled, if desired, with argon, krypton, or other similar gases capable of preventing obscure heat dispersion, and the inner chamber with gases adapted to accumulate the heat, such as air or the like.

The apparatus being for the purpose of operating in the intersideral space, that is to say in exceptional conditions as to vacuum and temperature, the material which appears to be the most suitable to be transformed in the above two cycles is ether; which does not prevent, however, that another convenient fluid, such as sulphurous anhydride be employed, without exceeding thereby the scope of the invention; thus, for instance, by placing on the vehicle apparatus for the gathering air, it is possible to feed with this air during stratospheric flight, the open-cycle generator, which allows to eliminate all consumption. According to another feature of the invention the open-cycle solar generator may be replaced by a combustion chamber into which hydrogen and oxygen are fed from two separate tanks, acting at the moment of their combination, on the vane wheels by means of nozzles.

The invention will be better understood by referring to the attached drawings whereof:

Fig. 1 is a diagram of the combined arrangement, according to the invention, of a double-reaction propulsion apparatus, by the system of the two generators.

Fig. 2 is a diagrammatic side view of an embodiment of the vehicle according to the invention, provided with six double-reaction propulsion apparatus.

Fig. 3 is a partial similar view, enlarged, of the same vehicle.

Fig. 4 is a plan view thereof.

Fig. 5 is a diagrammatic sectional view through the line A—B of Fig. 3.

Fig. 6 is a detail diagrammatic view of a portion of the propulsion chamber.

For a fuller comprehension of the reach of the invention it has been deemed convenient in the following description of the vehicle represented of citing some practical data on the construction of said vehicle.

Fig. 1 represents diagrammatically the vapour circulation in the two above mentioned circuits. In this figure, **1** is the mirror sector, **2** is the plate sector, **12** is the driving motor for the vane wheels, **13** is the condenser, **14** the tank, **15** the double-reaction propeller, **16** the assembly of the nozzles of the propeller, **17** the driving shaft, **20** the feeding pump of the closed-cycle circuit and **21** the feeding pump of the open-cycle circuit. The two circuits are represented in the drawing respectively, by a dotted line (**18**) and by a dot and dash line (**19**).

The circulation in the two circuits takes place as follows; the circuit **18** is firstly followed; this is completely closed and no loss of transformed fluid has to take place. This fluid comes from the condenser **13** which also constitutes a small reservoir. This fluid is sucked by the feeding pump **20**, by which it is forced through the generator **2**; in the generator said fluid is vaporised and surheated, after which it reaches through the conduit **18** the motor **12** and discharges into the condenser after having exerted its action on the wheel of the motor. This circuit must have no losses; the only cap **25** comprised therein glycerine-tight or the like; the tube **18** which con-

to no condensation, on the contrary it
because, as it will seen, if is placed on
surface of the two generators.

Let us follow now the circuit **19**, that
the circuit of the double-reaction prop
this circuit the transformed fluid is suc
the tank **14** by the feeding pump **21** w
tributed the same in the tubes **26** of t
cycle generator; in these tubes it is
and surheated and reaches through the
19 the nozzles **16** which discharge t
against the vanes of the wheel **28** which
the direction indicated by the arrow **2**
in the direction opposite to the direction
communicating to the same a supple
power utilised by the propulsion of th
in space and, after that, in the atmosp

The most suitable fluid to act in the
cuits is ether; in fact, its boiling tem
is 35° C and its vapour gives at 100°
Kg/cm² pressure, which is a convenient
for the type of generator proposed and t
type action turbines; as to the condens
gives at −20° C a pressure of 68 mm. of
and at −40° C a pressure of 5 mm. of
whereas at −80° C a vacuum degree is
which may be considered as almost abs
which, at any rate, will never be reac
normal condenser for which a vacuum o
of mercury is considered as a maximun

The very low temperature and the vac
gree being given, the condensers **13**
light and of very small dimensions, an
tain cases they can be suppressed and
by the same tubes which convey the va
charged from the motor **12** back to the
pumps of the generators, in view of th
of said tube and their positioning in
portion of the generator.

If the feeding and distribution are ca
by improved apparatus the vaporising t
be made of one piece from the lower en
upper end of each sector, which cons
great advantage from the viewpoint
strength and weight of the assembly; in
diffusing manifolds are used consisting
versal tubes connecting the vaporising t
given height (N° 30 of Fig. 3). These n
balance the temperature and pressure
vertical tubes of each sector; in the cas
ficulties of circulation, other feeding p
the issue from the condenser may be
cording to new methods.

It is to be considered that the genera
peller system must operate equally w
under the action of the gravity force a
said force ceases; the circulation in the
erators is so realised to meet the difficul
ing from the passage from a state to t
In fact, in the first case when the prop
erates, as the vehicle must go forward
chamber in front and the generator be
same, the fluids contained in the tube
forced by the acceleration of the vehicle
the low portion of each section of the g
and all circulation will be normally acco
according the law of gravity.

In the second case, when the pro
stopped, the fluids are more subjected
force which should force them towards
portion of the section and they migh
some difficulties of circulation; these d
are met by the employ, as it has been
a forced circulation generator, by means

ing pumps and distribution apparatus in a great number of tubes of small diameter, owing to which the fluids are almost stabilised in the generator.

These difficulties of circulations, however, have no great importance as when the propeller is stopped and the vehicle proceeds owing to its inertia, the operation of all the generators is also stopped and it is sufficient to stop the fluid immovably in its position at the moment when the propeller stops; as it will be seen further, at that moment the generator is disposed in the resting position in front of the direction of the solar beams, and before stopping the driving motor of the propellers, the feeding pumps are stopped, so as to empty all the vaporisation tubes, which causes the generator to be nearly empty in the resting position, and the fluid is concentrated in the condenser.

The efficiency of such a system is very high. Upon the above, in the reduced pressure circuit **18**, the surheated ether vapour will be at a temperature from 100° to 120° C. and a pressure from 5 to 6 Kg/cm²; the condenser **13** is in exceptionally favourable vacuum and temperature condition in the intersideral space and, without need of any suction pump, it will be sufficient to open, at the desired moment, the discharge valve of this condenser to bring its inside pressure to the level of the outside pressure corresponding to the nearly absolute vacuum; its temperature will stabilize at about −80° C. In these exceptional conditions, a useful effect on the turbine shaft of 0.52 HP per square meter of generator surface will be obtainable for a determinate period of time, in comparison to the 2,1 HP per square meter theoretically supply by the sun, that is an efficiency of about 24%.

In thus appears the happy condition of this volatisable fluid thermic plant, which operates in an ambient at about −80° C. (instead of 15° C. of the normal plants), and is adapted to realise, by a convenient distribution of the heating and cooling of the fluid, a cycle which is quite similar to that of the ordinary thermic machines which operate at a normal temperature, of 15° C., but at an average temperature of about 100° C., which represents a unique condition for a cycle and has never been realised in other plants.

Figs. 2, 3, 4 and 6 represented, as it has been said, an embodiment of a vehicle according to the invention. As it appears from these figures, the vehicle comprises a chamber **31** under which a long band is suspended, constituting the two generators. This band is composed of an upper part **1** constituting the high pressure open-cycle generator, and six generators **2** to **7** quite similar to each other but completely independent from one another, each of which feeds one of the six driving apparatus provided in the chamber. The generator **1** is composed (Fig. 3) of eighteen parabolic mirrors made of very thin extra-polished aluminium sheet, in its upper part **10**.

Under this portion **10** the generator **1** consists of a black plate system, similar to that of the closed-cycle system as hereinafter. Each element of this portion is composed of nine small tubes **26** leading from the distributor placed in the lower part of the section to the mirror portion **10**, parallelly to the black surface of the section; at the beginning of the mirror portion these nine tubes are connected three by three to tubes of greater diameter disposed along the focal axis of the three successive parabolic mirrors. At the issue from the mirrors the three tubes are united into a single tube which conveys the vapour to the nozzles of the double-reaction propeller. In the same section **1** there are other five elements similar to the one described above each, of which feeds in turn one of the propelling apparatus. It thus appears that each propelling apparatus disposes of a low pressure circuit **18** and a high pressure circuit **19**, which constitute in its assembly a generator-propeller group completely independent from the others, even in the case of injury.

For a medium power vehicle the band of the generators is twelve meters wide and 130 meters long and presents to the sun a surface of 1560 square meters. The generator **1** is 19,5 meters long and presents to the sun a surface of 234 sq. m. and each of the generators **2** to **7** is 18,41 meters long and their assembly present to the sun a surface of 1326 sq. m. The mirrors of the generator **1** are each 8 meters long in the direction of the focal axis and have a 0.666 meters opening, each mirror being, if desired, subdivided into several sections. The generators **2** to **7** are composed each of 60 small tubes whereof the inner diameter is 6,7 mm. connected by a manifold **23** of a greater diameter. Fig. 5 represents a section through the line A—B of Fig. 3, showing the black plate **3'** containing the small tubes **4'** and the athermanous plate **5'**.

The specular athermanous plate **5'** prevents the cooling of the metal plate **3'** at high temperature, analogously to what happens in the refrigeration tanks or better in the thermos bottles wherein the combined effects of inner specular surfaces, which transmit no heat, and vacuum interspaces are utilised. In fact, as the vehicle displaces in the vacuum space the hot metal plate is in the same conditions as a hot liquid in a thermos bottle, that is: vacuum space between plates **3'** and **5'** and subsequently specular surface of plate **5'**.

The weight of each of the six generators **2** to **7** is composed as follows: 1104 m. of vaporisation tubes of 6,7 mm. inner diameter of light metal alloy of 25 grams per m., i. e. 27,6 Kg; 221 sq. m. of thin sheet metal, of 320 grams per sq. m., i. e. 70,7 Kg; 221 sq. m. of cotton fabric, of the type employed in the aerostats, silvered or bright white, of 55 grams per sq. m., i. e. 12,1 Kg. The total weight of one generator is therefore 110,4 Kg. and that of the six generators is 662,4 Kg.

The generator **1**, being provided with parabolic mirrors and thicker vaporisation tubes is heavier, the weight being about 200,4 Kg.

The tubes which supply the ether vapours from the generators to the propelling apparatus are, in total, about 400 m. long and weigh 110 Kg.

The small feeding tubes which supply the liquid ether to the generator have a total weight 5 Kg.

It follows that the total weight of the band of the generators is 977,8 Kg.

In the above example the ratio between the surface of the low pressure generator and that of the high pressure generator is 5,66, but it is obvious that other ratios may be employed. Moreover, the length of 130 m. given for the generator band may be considerably increased. With the dimensions and the arrangement of the medium power vehicle above described, the ether vapour consumption of each propelling apparatus, i. e. of a series of nozzles **16**, is about 60 Kg. per hour, which gives a total consumption for the six apparatus of 360 Kg per hour for a trail-

ing force, which will be seen hereinafter, of about 2520 Kg; it is to be remarked that to obtain the same trailing force with a rocket system it would be necessary to use several tons of fuel per hour.

It is evident, upon the above, that the consumption of the apparatus varies according to the three systems mentioned above for the feeding of the open circuit **19**, i. e.:

(1) feeding with ether or like liquids, whereof the consumption by weight has been indicated above, said consumption being susceptible of being considerably reduced by suitable improvements.

(2) feeding with oxygen and hydrogen, which presents the normal consumption of the rockets of medium power, subtracting that corresponding to the solar energy gathered in the closed circuit.

(3) feeding with gathered air, as long as the vehicle displaces in the stratosphere, which eliminates all consumption of fuel, gas of combustion and liquid transformed and utilizes only the solar energy and air for the propulsion. By this feeding, at a height of 31000 meters, that is at $1/100$ of the atmospheric pressure, a speed of 1080 meters per sec, is required to reestablish the atmospheric pressure of 1 Kg. per sq. cm, in the air gathered, said pressure increasing with the speed according to a known relation.

It follows from the above that in order to reach the deliverance speed of 9 km per sec, considered as the necessary speed to reach our satellite, it will be possible to utilize the air feed system until reaching the speed of 5 Km. per sec. at a height of 70000 m and successively the ether feed until reaching the speed of 9 Km. per sec. in the intersideral space with the double advantage of reducing firstly the ether consumption and reaching, secondly, the maximum speed only out of the stratosphere, where there is no more resistance to motion by the air.

Fig. 6 shows in detail a propelling apparatus; from this figure it appears that the motor wheel **12** and the vane wheel of the double reaction propeller are mounted on the same shaft **17**; the wheel **38** of the motor **12** has, in the example described above a diameter of 30 cm. and a peripheral speed of 305 m/sec., and the vane wheel **28** has a diameter of 50 cm. and a peripheral speed of 510 m/sec. The common shaft turns, therefore, at a speed of 19500 rev. per min.

Wheels of small diameter have been chosen because they afford the advantage of reducing the weight of the driving part; they are consequently subjected to a very high action by the centrifugal force, but in an appropriate measure to be supported by modern turning constructions; it is evident that the diameter of these wheels, however, may be increased to obtain the same peripheral speed with a reduction of the stresses in the materials, or else an increase of the peripheral speed.

The vane wheel is provided with 275 vanes, against one eighth of which exert their action the vapour jets issuing at a speed of about 1500 m/sec from four adjacent nozzles **16**; the vapour jets are compressed and forced back by the vanes which displace in an opposite direction at a speed of 510 m/sec, which gives rise to an active pressure on the vanes of about 8 Kg/sq. cm; the surface of each vane being of 2,5 sq. cm., the resulting pressure of the 35 vanes subjected to the action of the vapour is of 700 Kg; practically, only $\frac{6}{10}$ of the surface of the vanes is utilized and the useful traction force for each apparatus does not go beyond the 440 Kg., with the essential consequence of having a constant pressure and traction force, without falling into the intermediary normal pressure, which constitutes a fundamental principle of this propelling apparatus.

Upon the above, as each section of the closed-cycle generator has a surface of 221 sq. m. and each square meter gives 0.52 HP, the actual power on the shaft of each propelling apparatus is 115 HP, which gives 690 HP for the total actual power at disposal on the six shafts of the vehicle, except the power afforded by the nozzles.

As it results from Figs. 3, 4 and 6, the six propelling apparatus are suspended under a tubular frame **34** having six points, and outside the chamber **31**, according to radial directions, and are enclosed by a structure **36** for the only purpose of maintaining the apparatus at a constant temperature; the cylindric structure **36**, therefore, may be made of very thin sheet metal or fabric not undergoing any inside pressure.

The frame **34** is placed in the cylindric part of the chamber which has a diameter of about five meters and ends with two conical vaults and constitutes the floor of the upper part for the pilots; this part **31** is compound of several layers of cotton bias fabric, preferably rubberised, whereof the weight is not over 2 Kg./sq. m; these fabrics resist very well to the internal pressure required for the respiration of the pilots to which the chamber is subjected in the vacuum, and to the variations of the external temperatures. The outer layer of these fabrics must be painted according to alternated black and white bands, to maintain in a known manner, the temperature inside the chamber within convenient limits. If, in spite of this, the temperature would be still too high, a very thin sheet metal coating might be employed on the outer layer of the chamber wall, somewhat removed from said wall to reduce the temperature still further. The structure **33** under the cage for the propelling apparatus has the same characteristic as the structure **36** which encloses said apparatus.

The chamber described above has a very low weight which results from: the weight of the rubberized fabric, i. e. about 132 Kg, the weight of the tubular frame with tank and condensers, i. e. 98 Kg; the weight of the light structures **33**, **36**, i. e. 20 Kg; which gives comprehensively 250 Kg. The rotating masses of the propelling apparatus consisting of the driving shaft **17**, the vane wheel **23** and the driving wheel **38** weigh only 34 Kg. The casing of the driving apparatus and the supporting frame of the propelling apparatus, as well as the supports and nozzles weigh only 26 Kg. and the complete propelling apparatus weighs, therefore, 60 Kg. which means 360 Kg. for the six apparatus comprehensively.

The electric plant and the feeding pumps weigh about 80 Kg. and increase, therefore, the total weight of the propelling apparatus up to about 440 Kg.

The total weight of the vehicle is composed of the following elements:

	Kg.
Weight of the band generator	977
Weight of the chamber, frame and light structures	250
Weight of the propelling apparatus	440
Weight of the two pilots	140
Weight of the ether in the tank	480
Total	2287

The traction force exerted by the six propelling apparatus equal to Kg. 420×6 i. e. 2520 Kg. exceeds, therefore, by about one tenth the total weight of the vehicle, which affords a sufficient buoyancy to allow the apparatus to travel in the intersideral space. This in the case of normal operation; in case of fault of one of the six propelling apparatus, the power of the other five apparatus, is increased by increasing the issue of the nozzles 16 to the maximum, so as to have still a provisional safety buoyancy for the vehicle.

The favourable temperature for the operation of this vehicle are found only in the intersideral vacuum, but in the stratosphere above 16000 meters of altitude with an atmospheric pressure about one tenth of the normal sufficient conditions for the operation of the vehicle are already found. Below 16000 meters of altitude the power of the propelling apparatus decreases considerably owing to the decrease of the solar radiations and to air ventilation.

It is for this reason that the apparatus according to the invention cannot start from the earth by its own means. To lift the vehicle up to 16000 m. of altitude external means must then be employed, such as stratospheric airplanes or simply stratospheric balloons. A stratospheric balloon of the type FNRS used by Piccard, of 14000 cu. m. deprived of the spherical chamber and other weights which are not necessary, can lift up to 16000 meters, according to Piccard's data, a useful weight above 1200 Kg. and can be sufficient for the vehicle of the above example, utilizing the power, reduced to about the half, of its propelling apparatus. With a balloon of 124000 cu. m. of the type "Poland Star" it will be possible to bring to 16000 m. a weight of several tons and consequently a vehicle having double dimentions in comparison to that described above, with the propelling apparatus at rest.

For the departure from the earth it is necessary, of course, to take in consideration the latitude, the season, the altitude, the hour, the meterological conditions and the periodicity of the solar activity lasting 11 years. Under certain points of view it will be convenient to chose high mountain places or arctic zones. The starting and the arriving must be performed by an anchoring mast; the length of the vehicle being given, the height of the anchoring mast might be equal to about the half of the total length of said vehicle, as the other half of the vehicle might be received in a well at the bottom of the anchoring mast.

The return on the earth can be effected by the pilots by a parachute after having abandoned the vehicle at a suitable altitude for the supporting of the parachutes, as it is provided by nearly all the plans for intersideral travels.

It is to be noted that at the return the vehicle has lost nearly all the weight of the ether and it will be possible, subsequently, to study some subsidiary heating and supporting means for landing by the own means of the vehicle.

The driving of the vehicle presents some particularity: the vehicle must proceed in the space with the chamber in front and the band of the generators behind, except in the case of oblique proceeding owing to the unfavourable direction of the solar radiations. For modifying the direction of advancement it is necessary to increase or decrease the power of one or more adjacent propelling apparatus as on the four-propeller ships. For decreasing the speed or stopping the vehicle the direction will be modified by 180°.

A gyroscopic system of known type, might be useful to keep the exact direction and to control slight rotational displacements of the vehicle around its longitudinal axis. This rotation around the axis can be obtained also by displacing by 90° in either direction a group of the nozzles 16 in front to the vane wheel 28. By this system of rotation around the longitudinal axis it will be possible to dispose and maintain the band of the generators in the most suitable position to receive the solar radiations in the normal direction to its front surface, so as to obtain the maximum power from the generators. The same rotation can be utilized to suitably decrease the power of the generator; thus, by turning the band of the generators by 90° with respect to the position corresponding to the maximum power, the stopping of the operation of the generator will be obtained, the solar radiations striking then the edge of the band of the generators, producing no heating of the tube surfaces.

LUIGI GUSSALLI.

PUBLISHED
MAY 25, 1943.
BY A. P. C.

L. GUSSALLI
ASTRONAUTIC VEHICLE
Filed Oct. 3, 1939

Serial No.
297,773
3 Sheets-Sheet 1

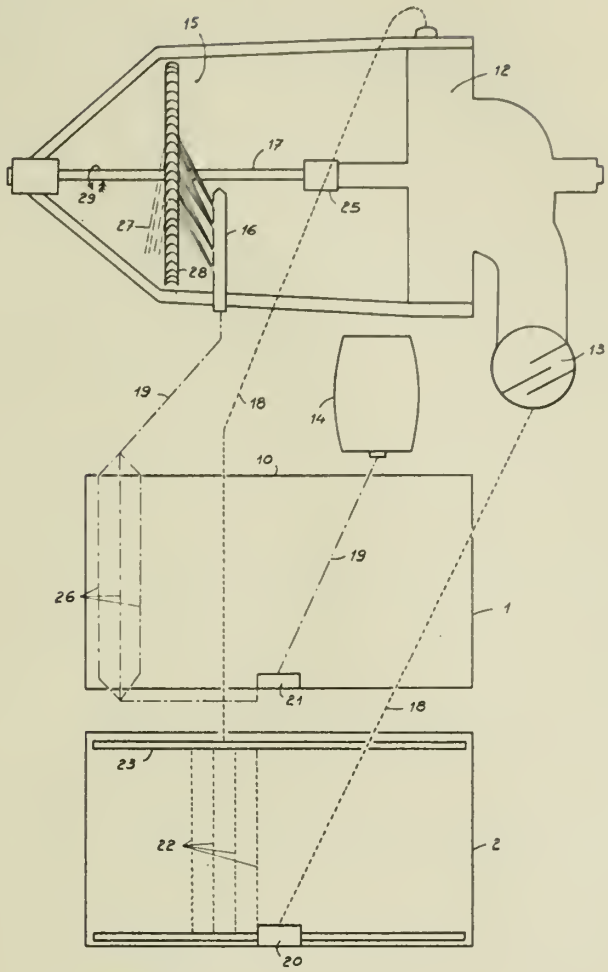

Fig. 1

Inventor
LUIGI GUSSALLI

By: Young, Emery & Thompson
Attorneys

PUBLISHED
MAY 25, 1943.
BY A. P. C.

L. GUSSALLI
ASTRONAUTIC VEHICLE
Filed Oct. 3, 1939

Serial No.
297,773
3 Sheets-Sheet 2

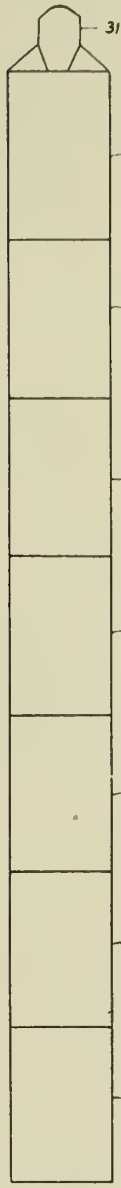

Fig 2

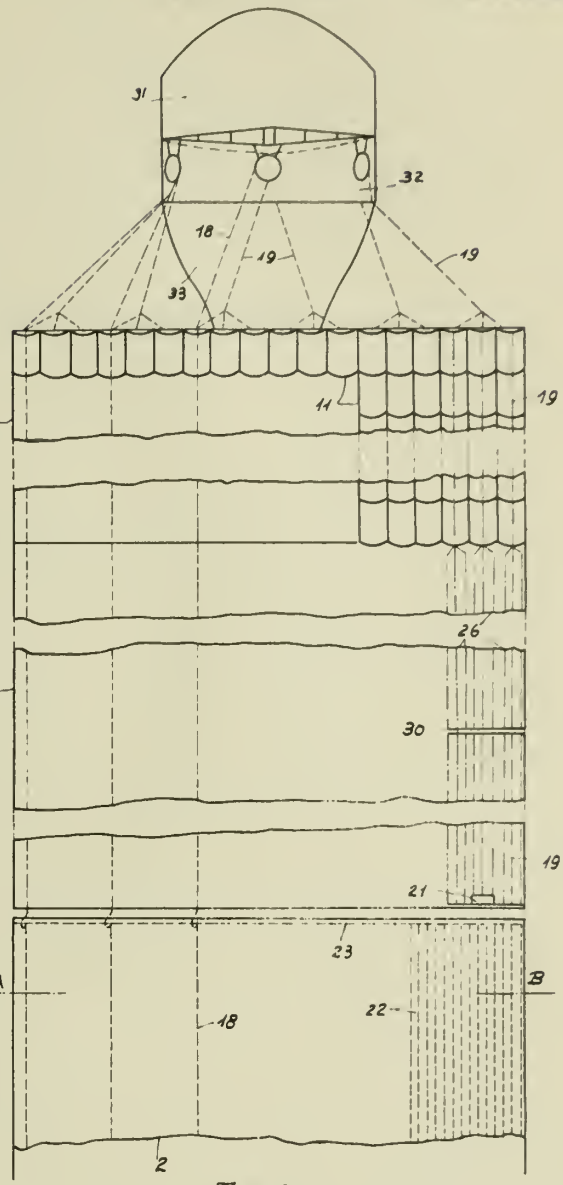

Fig. 3

Inventor
LUIGI GUSSALLI

By Young, Emery & Thompson
Attorneys

PUBLISHED
MAY 25, 1943.
BY A. P. C.

L. GUSSALLI
ASTRONAUTIC VEHICLE
Filed Oct. 3, 1939

Serial No.
297,773
3 Sheets-Sheet 3

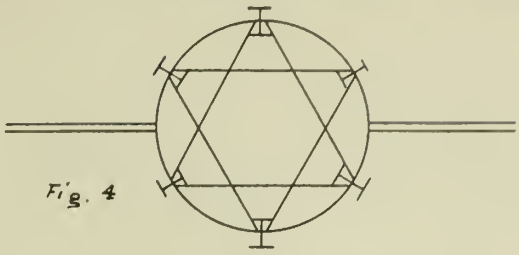

Fig. 4

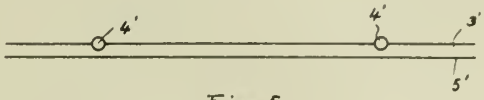

Fig 5

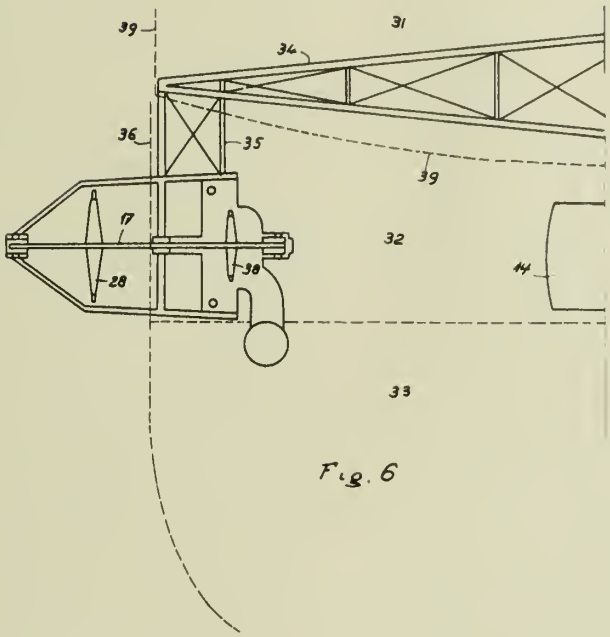

Fig. 6

Inventor
LUIGI GUSSALLI

By Young, Emery & Thompson
Attorneys

Published May 25, 1943

Serial No. 298,141

ALIEN PROPERTY CUSTODIAN

AUTOMATIC WEIGHING DEVICE

Theophile Rival, Brussels, Belgium; vested in the Alien Property Custodian

Application filed October 5, 1939

This invention relates to measuring devices and has special reference for an automatic weighing device for measuring and discharging successive weighed quantities of material.

The present application is a continuation-in-part of my prior application for patent on automatic scale for weighing et cetera, Serial No. 131,948 filed March 19, 1937.

One important object of this invention is to provide a novel and improved weighing device, wherein a pair of material receiving vessels are alternately filled and alternately emptied, each vessel being filled at the time the other is being emptied.

A second important object of the invention is to provide a novel double tilting beam supporting means for the weighing vessels used, the arrangement being such that the vessels are alternately depressed by weight therein and the beams so tilted as to raise the unweighted vessel.

A third important object of the invention is to provide a novel arrangement of weights and operating means therefor in such a device.

A fourth important object of the invention is to provide a novel arrangement of control weight and operating means therefor in such a device.

A fifth important object of the invention is to provide novel stop means for the device to prevent operation thereof.

A sixth important object of the invention is to provide a novel arrangement for increasing the effective weight of said control weight at a certain stage in the operation of the device.

With the above and other objects in view, the invention consists in general of certain novel details of construction and combinations of parts hereinafter fully described, illustrated in the accompanying drawings, and particularly pointed out in the appended claims.

In the accompanying drawings, like characters of reference indicate like parts in the several views, and

Figure 1 is a side elevation of the complete apparatus forming this invention.

Figure 2 is a vertical median section at right angles to Figure 1.

Figure 3 is an enlarged perspective view of the upper part of the apparatus, certain of the parts being omitted and others broken away to better show the remaining parts.

Figure 4 is a detail elevation of a certain supplemental weight device used with this apparatus.

Figure 5 is a detail elevation showing a modification of the device of Figure 4.

Figure 6 is a detail showing a second modification of the device of Figure 4.

Figure 7 is a detail perspective of a form of stop used in this invention.

Figure 8 is a diagrammatic view showing the positions of certain weight arms and the operating means therefor at the start of the weighing operations.

Figure 9 is a diagrammatic view of the weighing vessels and associated parts when the weight arms are positioned as in Figure 8.

Figure 10 is a view similar to Figure 8, but showing a second position of the arms.

Figure 11 is a view similar to Figure 9, but showing a second position of the vessels.

Figure 12 is a view similar to Figure 8, but showing a third position of the arms.

Figure 13 is a view similar to Figure 9, but showing a third position of the vessels.

Figure 14 is a view siimlar to Figure 8, but showing a fourth position of the arms.

Figure 15 is a view similar to Figure 9, but showing a fourth position of the vessels.

Figure 16 is a view of the arms in position to start a new cycle of operations.

Figure 17 is a view of the vessels in position to start said new cycle of operations.

Figure 18 is a perspective view of certain stop arrangements used in this device.

In the construction of the invention according to the illustrated embodiment, there is provided a lower or main frame of generally rectangular form and having at its corners upright members or legs 1. A platform 1*a* is supported by the legs 1 and is provided with a centrally located opening 1*b*, and a pair of laterally disposed openings 1*c*, the purposes of which will be presently described. The upper ends of the legs 1 are connected by longitudinal members 2 and transverse members 2*a*. At each side of the frame is a pair of side frame members of general inverted V-shape, and each consisting of converging members 2*b*, rising from the ends of a member 2, and connected at their upper ends by a horizontal member 2*c*. Extending toward each other from the members 2*c*, are the horizontal arms 3 of brackets having vertical arms 3*a*, each provided with an opening 3*b*, forming a seat for a knife edge 3*c*, the openings 3*b* being alined to receive the opposite ends of said knife edge. The upper end edges 3*d* of these brackets form knife edge seats for the ends of a knife edge 4. The knife edge 4 is fixed in beam 5, here shown as having arms 5*a* and 5*b* of equal lengths. The knife edge 3*c* is fixed in a beam 6 having arms 6*a* and 6*b*

also of equal lengths. Furthermore, the arms of the beam **5** are equal in length to the arms of the beam **6**. Extending from opposite sides of the beam **5** and at equal distances from the knife edge **4**, is a pair of arms **7** having terminal extensions **7***a* arranged parallel to the beam **5** and terminating at equal distances from the knife edge **4**. Extending from opposite sides of the beam **6** at equal distances from the knife edge **3***c* is a pair of arms **8** having terminal extensions **8***a* arranged parallel to the beam **6** and terminating at equal distances from the knife edge **3***c*. The moment lengths of the arms **7***a* in relation to the knife edge **4** are equal to the moment lengths of the arms **8***a* in relation to the knife edge **3***c*. The balancing beams **5** and **6** are thus duplicates and equivalents. Knife edge loops **9** and **12** are hooked on the end portions of the arms **7***a*, and knife edge loops **10** and **11** are hooked on the end portions of the arms **5***a* and **5***b*. Knife edge loops **13** and **16** are hooked on the end portions of the arms **8***a*, and knife edge loops **14** and **15** are hooked on the end portions of the arms **6***a* and **6***b*. At **17** and **18** is a pair of horizontally disposed parallel motion bars which are of equal lengths to the beams **5** and **6**. A yoke **10***a* connects one end of the bar **18** to the loop **10**, and a yoke **11***a* connects the opposite end of the bar **17** to the loop **11**. The purpose of these yokes is to straddle the ends of the beam **6** and thus to prevent the movement of one beam from interfering with the movement of the other beam. A rod **14***a* connects the remaining end of the bar **17** to the loop **14**, and a rod **15***a* connects the remaining end of the bar **17** to the loop **15**. The loops, yokes and rods just described form hangers for the bars **17** and **18**, and it will be noted that the hangers depending from each beam are connected to different parallel motion bars at opposite ends of said bars.

Disposed vertically below the arms **7***a* and **8***a* at one side of the beams is a load carrying bar **19**, and a similar bar **20** is vertically disposed below the other arms **7***a* and **8***a*. The loop **9** is connected to one end of the bar **19** by a rod **9***a*. The loop **12** is connected by a rod **12***a* to the opposite end of the bar **20**. The loop **16** is connected by a rod **16***a* to the remaining end of the bar **19**, and the loop **13** is connected to the remaining end of the bar **20** by a rod **13***a*. The loops and rods just referred to form hangers and each beam is connected by hangers to the opposite ends of the respective load carrying bars.

Suppose now that the bar **19** is depressed by weight applied thereto. This will cause the arms **5***a* and **6***b* to tilt downwardly and the arms **5***b* and **6***a* to tilt upwardly. The tilting of the beams **5** and **6** in this manner will cause the bar **17** to rise and the bar **18** to move downwardly. If, on the other hand, the bar **20** is depressed, then the bar **18** will rise and the bar **17** will be depressed in accordance with the tilting of arms **6***a* and **5***b* downwardly and arms **6***b* and **5***a* upwardly.

It will be noted that there are two linkage systems, one connecting the bar **19** and the bar **18**, and the other connecting the bar **20** and the bar **17**, and that the action of each system is to produce vertical movement of the bars **17** and **18** in opposition to the movements of the bars **20** and **19** respectively. Since the several elements of one system are duplicates of the corresponding elements of the other system, one system will balance the other, and unless load is applied to one or the other of the load carrying

take place under normal conditions of us

The bar **19** is provided centrally of its with a ring or band **19***a*, and the bar **20** i larly provided with a ring or band **20***a*. T **19** is also provided at equally spaced di on each side of the ring **19***a* with vertical forated eyes **19***b* and the bar **20** is similar vided with eyes **20***b*. Load receiving ves and **22** are provided respectively with r necks **21***a* and **22***a* which are open at thei ends and fixed in the respective rings **1** **20***a*. The vessels **21** and **22** have inverted conical lower portions **21** having openings i lower ends. The opening in the portion normally closed by a valve **23** carried on t per end of a stem **23***a*, which extends wardly through one of the openings **1** vessel **22** extends at its lower part into a ing hopper **23***b* having an inverted frusto- lower end **23***c* opening into a draw-off charge pipe **23***d*, through an opening **27**. lower end of the stem **23***a* is fixed a wei which serves to urge the valve **23** to close tion. A collar **24***a* is fixed to the stem **23** the opening **27** so that upon downward mo of the vessel **22**, the collar **24***a* will enga hopper bottom **23***c* and limit further dow movement of the valve while not interferir movement of the vessel further downwa effect opening of the valve. Similarly f vessel **21**, there is provided a discharge **21***c* having an inverted frusto-conical provided with an opening **25** alined with maining opening **1***c*, and communicating discharge pipe **25***a*. A valve **26** normally the bottom of the vessel **21**, and is carrie stem **26***a*, which passes through the openi and **1***c* and carries at its lower end a wei Also the stem is provided with a colla These parts function in like manner to t responding parts associated with the vesse

A valve **29** normally closes the lower en filling head or nozzle **29***a*, which extends down into the upper part of the neck **21** valve opening by upward movement. The **29** has an upwardly projecting stem **29***b* extends upwardly to unite with the tra member of a yoke **30** having legs **30***a* whi tend downwardly through the eyes **20***b*. A nular weight **31** is supported by the lowe of these legs, the weight urging the va closed position. Collars **80** and **81** are fi the legs **30***a* above the bar **20** and norm spaced relation thereto. By this means wh the bar **20** rises to a sufficient extent, it e the collars **80** and **81** and lifts the yoke an **29**, so that the vessel **21** receives materia the head **29***a*. A similar arrangement i vided for the vessel **22** in which the valv connected by a stem **32***a* to a yoke **33** arms **33***a* extending downwardly through t **19***a* and carrying an annular weight **34** arms **33***a* are provided with collars **33***b* a lifting of the bar **19** effects opening of the **32**.

Extending first laterally and then down from the bar **17** are roller hangers **17***a* an These hangers are preferably spaced evenl the center of the bar **17** and have lateral p tions at their lower ends on which are rev mounted rollers **35** and **38**. Similarly t **18** is provided with hangers **18***a* and **18***b* ing at their lower ends rollers **36** and shaft **39** is journaled in frame extension

mounted on the members 2. Pivoted on the shaft 39 is a pair of arms 40 and 41 carrying at their outer ends weights 40*a* and 41*a*. The rollers 35 and 37 lie against opposite edges of the arm 40 and the rollers 36 and 38 lie against opposite edges of the arm 41. Under charging and discharging conditions, these arms incline upwardly from the shaft 39 and in opposite directions as shown, but normally the arms extend vertically, one behind the other. In order to cause synchronous opposite movements of the arms 40 and 41, the arm 40 is provided at the shaft 39 with a segmental gear 40*b*, and the arm 41 is similarly provided with a segmental internal gear 41*b*. To secure a continual motion the arm 41 is provided with a segmental gear 41*c*. Journalled in the frame sections 39 is a shaft 42 having fixed thereon a segmental gear 42*a* meshing with the gear and having also fixed thereon a segmental gear 42*b* meshing with the gear 41*b*.

Centrally of the bar 17 is provided an opening 17*c* and centrally of the bar 18 is provided an opening 18*c*, which is thus alined with the opening 17*c*. Through the openings 17*c* and 18*c* slidably extend a rod 57 whereon is fixed collars 57*a* and 58 resting respectively on the rods 17 and 18 when the vessels are in normal unloaded positions. The lower end of the rod 57 carries an open frame 59 which surrounds the shafts 39 and 42, so that the frame can move up and down without interfering with their shafts. Fixed to the lower end of the frame 59 is a downwardly extending rod 59*a* which carries a weight 60 on its lower end. From this construction, it will be seen that upward movement of either of the bars 17 and 18 will effect lifting of the weight, the rod 57 slipping freely through the central opening of the other bar. The weight 60 is preferably termed the control weight and is increased or diminished in accordance with the weights to be measured in the vessels.

For the actual weighing and dispensing of the substance to be handled, the foregoing apparatus is sufficient, certain refinements and auxiliary apparatus being presently described. In order to follow the operation, reference is now made to Figures 8 to 17. In order to start the apparatus, one or the other of the valves 29 and 32 must be opened and this may be effected by raising the corresponding bar 19 or 20, this being done manually or by any suitable means. Let it be supposed that the bar 20 be raised. The conditions then existing will be as shown in Figures 8 and 9. In these figures, the arm 40 has dropped to the right and the arm 41 has dropped to the left. As the bar 20 is raised, the bar 19 will be depressed in the manner previously described. As the bar 20 moves upwardly, it lifts the yoke 33 by engagement of the bar with the collars 80 and 81 and thus causes opening of the valve 29 so that the substance being measured will flow from the head 29*a* into the receptacle 21. Also the elevation of the bar 20 will cause upward movement of the bar 17 and downward movement of the bar 18, which will be correspondingly accompanied by upward movement of the rollers 35 and 38 and downward movement of the rollers 36 and 37, thus permitting the weights 40 and 41 to assume the positions shown in Figure 8. Furthermore, elevation of the bar 17 causes, by its engagement with the collar 57, raising of the control weight 60. As the substance being handled enters the vessel 21, the latter tends to drop and cause downward movement of the bar 20, the weights 31 and 60 assisting in this movement since the bars 17 and 20 are linked to move in the same direction. Also downward movement of the bar 17 raises the bar 18. The tendency of the bar 18 to raise is resisted by the weights 41*a* and 40*a* since the arms 41 and 40 engage the rollers 35 and 37 attached to bar 18 and tend to hold these rollers down. The parts will continue in the positions shown in Figures 8 and 9 until the unit quantity of material for which the device has been arranged has entered the vessel 21. When this occurs, the weight in the receptacle 21 will cause that receptacle and the bar 20 to first move to the position shown in Figure 11, with consequent movement of the bars 17 and 18 to the position shown in Figure 10. This movement of the bars 17 and 18 causes upward movement of the rollers 36 and 37, the rollers 35 and 38 moving into alinement respectively with rollers 36 and 38. Under these conditions, the arms 40 and 41 extend vertically and consequently the effect of the weights is nullified. At this instance, the effect of the weight 60 is also nullified since the collars 57*a* and 58 rest on both bars 17 and 18. Also the bar 20 drops free of the collars 80 and 81 and the weight 31 closes the valve 29. The loaded vessel 21 now continues to move downwardly until the parts assume the positions shown in Figures 12 and 13. At this stage in the operation, the arms 40 and 41 are reversed from Figure 8, the arm 40 being to the left and the arm 41 to the right, with the rollers 35 and 38 down and beneath the arms 40 and 41 respectively. The weight 60 is now carried by the bar 18. The valve 29 is still closed but the valve 32 is opened by engagement of the bar 19 with the collars 33*b*. Finally, the collar 28 has engaged the platform 1, and the valve 26 has been opened to discharge the contents of the vessel 21. The valves at the bottoms of the vessels are larger than the valves at the top, so that discharge takes place more rapidly than inflow. Thus the vessel 21 has been emptied before the vessel 22 has been filled. Figures 14 and 15 correspond to Figures 10 and 11 but with the receptacle 22 moving downwardly, and it is not deemed necessary to discuss these figures or Figures 16 and 17 which show the emptying of the vessel 22 and the vessel 21 again being filled.

A counting or registering mechanism is indicated at 43 and 44 and this mechanism is driven from shaft 42. The mechanism 43 and 44 is simply a usual form of any such device as is commonly utilized for counting strokes of a mechanism, and since its particular construction forms no part of the present invention, it is not deemed necessary to further describe this part of the apparatus.

In order to effect stopping of the action when desired, there is fixed on the shaft 42 a gear 42*c*, with which a gear 45 splined on a shaft 50 may mesh. The shaft 50 is provided at one end with an enlarged and threaded portion 50*a*, mounted in an internally threaded sleeve 51, suitably connected to the gear 45 to move the latter longitudinally of the shaft. The sleeve 51 is provided with a crank 51*a* for rotating the sleeve. On the shaft 50 is mounted a pair of gears 50*b* and 50*c* below which are provided rack bars 46 and 47 meshing respectively with gears 50*b* and 50*c*. Above the gears 50*b* and 50*c* and meshing respectively therewith are rack bars 48 and 49. Thus when the shaft 50 is rotated in clockwise direction, the rack bars 46 and 47 will be simultaneously moved to the left, while rack bars 48

and 49 will move to the right. Reversing the rotation of the shaft 50 reverses the movements of the rack bars. The rack bars 46, 47, 48 and 49 carry L-shaped stop fingers 46*a*, 47*a*, 48*a* and 49*a*, respectively, and these stop fingers have horizontal portions all in the same horizontal plane. Depending from opposite edges of the bar 17 and adjacent the ends thereof is a pair of hanger rods 54 and 55 having respective outwardly extending stop fingers 54*a* and 55*a*. Similarly the bar is provided with hangers 53 and 56 having respective stop fingers 53*a* and 56*a*.

In operation when the gears 42c and 45 are in mesh, the shaft 50 is rocked in one direction or the other, and the fingers 46*a*, 47*a*, 48*a* and 49*a* move into the paths of the respective fingers 56*a*, 53*a*, 54*a* and 55*a* thus checking movement of the bars 17 and 18. If the gear 45 is moved by rotation of the sleeve 51 on the screw 50*a*, the gear 45 will be disengaged from the gear 42*c*, so that the shaft 50 may be manually rotated to selectively move the rack supported fingers into and out of the paths of the fingers supported by bars 17 and 18.

Means may be provided for increasing the effect of the weight 60 as it moves upwardly by adding thereto additional weight members. For this purpose, a rod 60*a* extends downwardly from the weight 60 and on this rod are fixed the collars 61, 62 and 63. Spaced above these collars are weight members 61*a*, 62*a*, and 63*a* which are perforated so that the rod 60*a* may slide through the weights. These weights are supported from an arm 64*a* vertically adjustable by the adjusting means 64. By manipulation of the adjusting means 64, the arm 64*a* may be moved downwardly to cause one or more of the weights 61*a*, 62*a* and 63*a* to rest on the corresponding collar.

It is found advisable to slightly over-weight the weight 60 when raised, and in order to effect this, one of the balance devices shown in Fgures 4, 5 and 6 may be employed.

As shown in Figure 4, a scale beam 65 is supported by a knife edge 65′ on a knife seat 66 which may form part of the platform 1. The beam 65 passes through the elongated slot 67′ formed in the rod 59, the beam being normally at the vertical center of the slot. A balance weight 68 is slidably mounted on the beam. When the rod 59 rises, the lower end of the slot 67′ engages the beam and tilts the same upwardly to raise the weight 68 which thus is brought into service to add to the resistance to upward movement of the rod 59. A counter-balance 69 is slidably positioned on the beam 65 and on the opposite side of the fulcrum to the weight 68, which has greater effect than the counter-weight. The counter-weight 69 carries a pointer 69*a* which

ness of adjustment between the weights 68 ar

In Figure 5, the scale beam 65*a* passes cen through the vertically elongated slot 67 fo in the rod 59. The beam 65*a* is fulcrumed a on the seat 66*a* and carries a sliding weight A stop 71 serves to limit downward moveme the right hand end of the beam 65*a*.

A compound arrangement is shown in F 6, in which a scale beam 65c is fulcrumed a on a seat 66*b* and passes centrally through a tical slot 67² formed in the rod 59. This has a weight 69′ slidably mounted thereon o side of the fulcrum and a counter-weight 68² ably mounted on the other arm of the bea enable nicety of adjustment to be obtaine stop 71′ limits downward movement of the w 69′. A second scale beam 65*d* is fulcrume neath the longer arm of the beam 65*c* at 6 a seat 66c. A weight 70 is slidably mount the beam 65*d* at one side of the fulcrum a counter-weight 68*b* is slidably mounted o other arm of the beam 65*d*. A link 70*a* con the weights 69′ and 70 so that these mo unison, the weight 70 moving away from ful 65*e* while the weight 69′ moves toward the crum 65², or the weight 70 moving out whil weight 69′ is moving in.

By means of one of these arrangements, quired weight is added to the weight 60 a latter approaches the upward limit of its m ment.

A settling tank 72 is supplied with liquid weight or measured by a pipe 73 leading any suitable source, and a pipe 74 lead branches to the heads 29*a* and 32*a*.

A lever 82 turning on a pivot 83 rised o longitudinal member 2 permits to press a on the rack bar 46, to print the total o measured quantity.

Means are also provided for securing the 40 and 41 in the vertical position they assu the time the vessels 21 and 22 are at equal he For the purpose, the means best shown in F 7 is used. This device consists of an inv U-shaped head 75, the legs of which are s at 75*a*. A screw 76 supports this head a used to adjust the same vertically. Proje toward each other from the lower ends o legs 75*a* is a pair of spring stop members which when the head is in its lower positi in the paths of the arms 40 and 41, so th vertical position, these arms engage the stop and the arms can not swing until the he raised.

THÉOPHILE RIV

PUBLISHED

MAY 25, 1943.

BY A. P. C.

T. RIVAL

AUTOMATIC WEIGHING DEVICE

Filed Oct. 5, 1939

Serial No.

298,141

3 Sheets-Sheet 1

FIG. 1

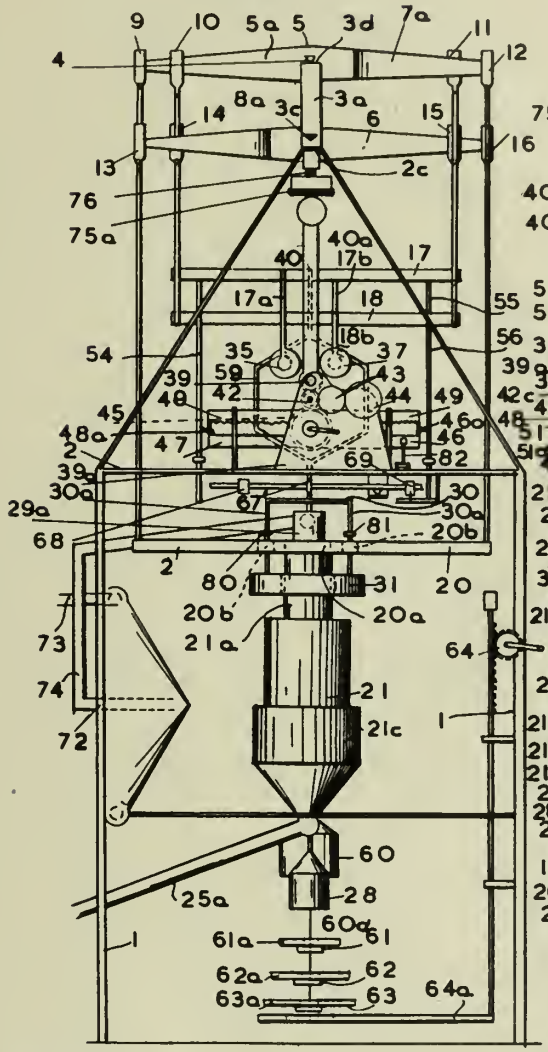

FIG. 2

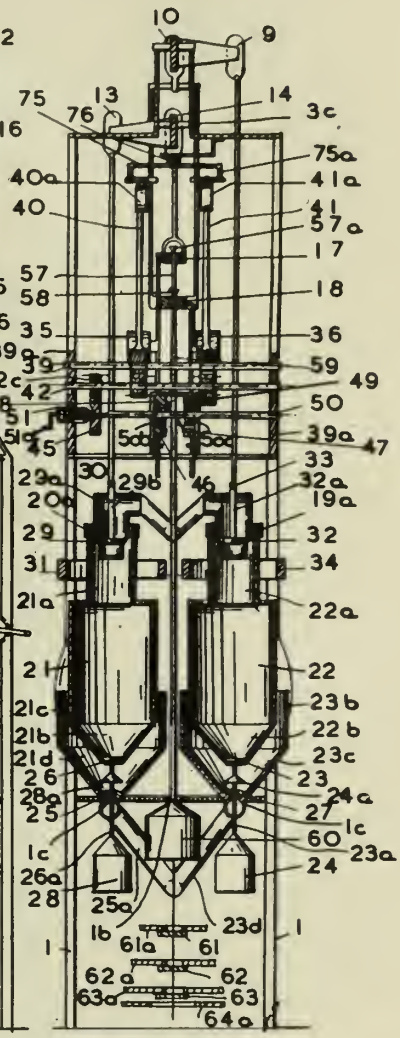

FIG. 4

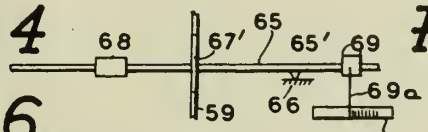

FIG. 5

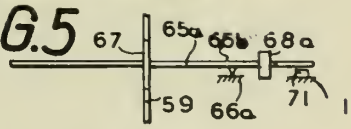

FIG. 6

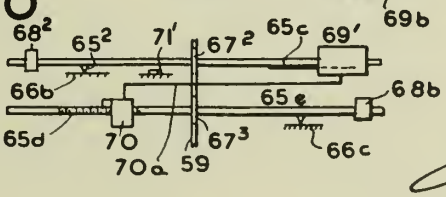

INVENTOR

THEOPHILE RIVAL

per

ATTORNEY

PUBLISHED

MAY 25, 1943.

BY A. P. C.

T. RIVAL

AUTOMATIC WEIGHING DEVICE

Filed Oct. 5, 1939

Serial No. 298,141

3 Sheets-Sheet 2

FIG. 3

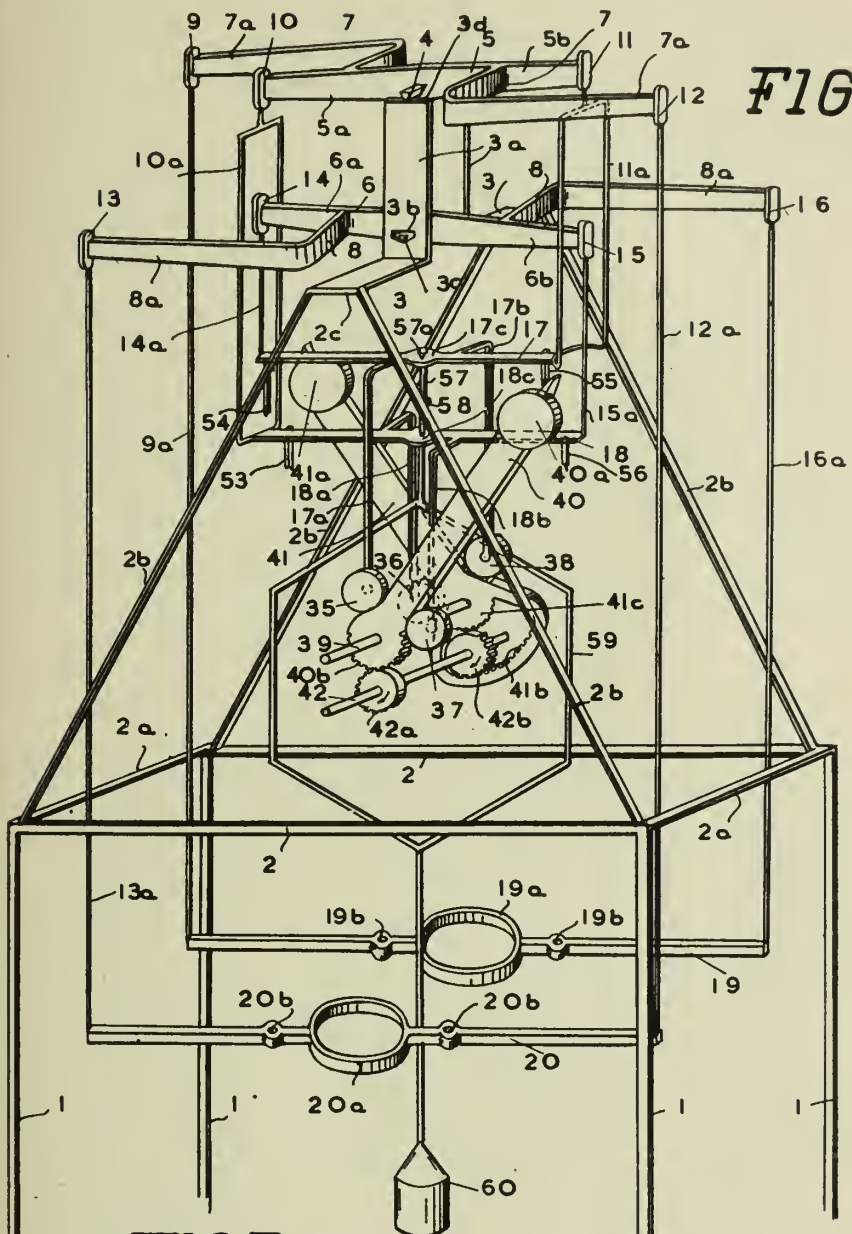

FIG. 7

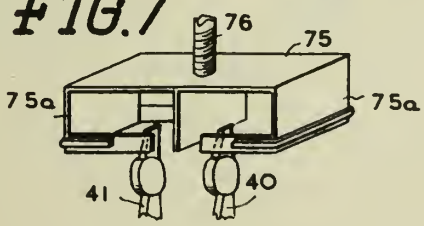

INVENTOR

THEOPHILE RIVAL

per

ATTORNEY

PUBLISHED

MAY 25, 1943.

BY A. P. C.

T. RIVAL

AUTOMATIC WEIGHING DEVICE

Filed Oct. 5, 1939

Serial No. 298,141

3 Sheets-Sheet 3

FIG. 8

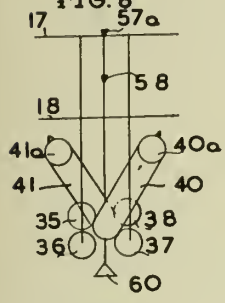

FIG. 10

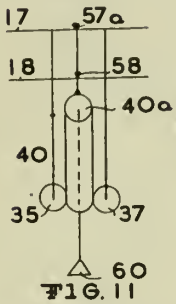

FIG. 12

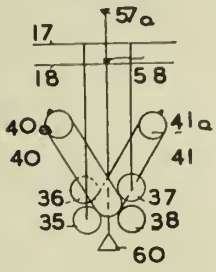

FIG. 14

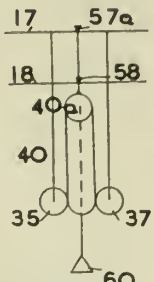

FIG. 16

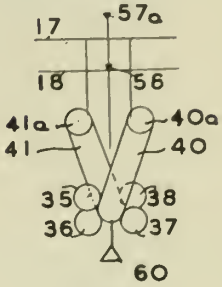

FIG. 9

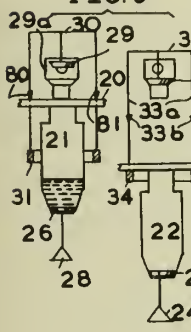

FIG. 11

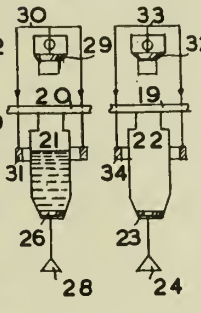

FIG. 13

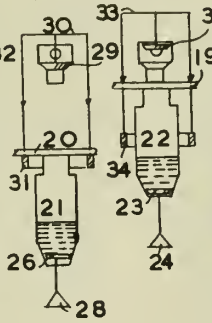

FIG. 15

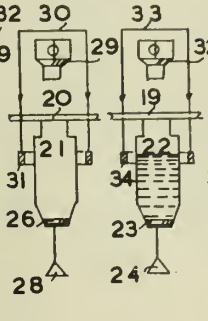

FIG. 17

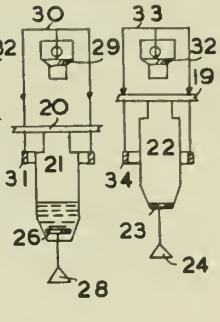

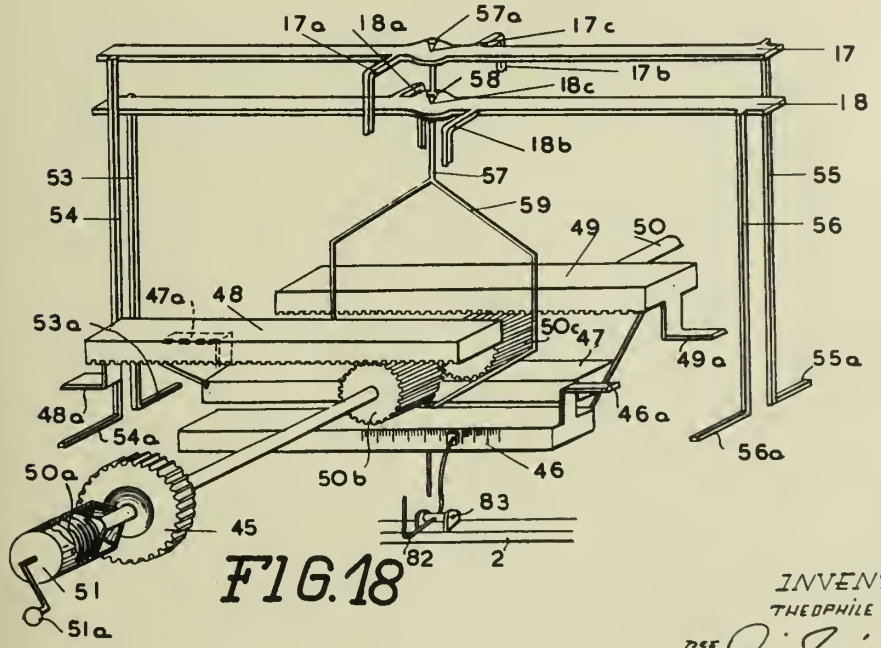

FIG. 18

INVENTOR
THEOPHILE RIVAL
per
ATTORNEY

Published May 25, 1943

Serial No. 299,877

ALIEN PROPERTY CUSTODIAN

WINCH PROVIDED WITH AN AUTOMATIC RELEASE AT THE END OF THE LIFTING OPERATION

Roland Laraque, Paris, France; vested in the Alien Property Custodian

Application filed October 17, 1939

The present invention has for its object a winch provided with automatic release at the end of the lifting operation which is applicable to the retraction of aeroplane undercarriages for example.

The various features of said invention will be made apparent in the ensuing description and with reference to the accompanying drawing wherein:

Fig. 1 shows the winch in transverse section;

Fig. 2 shows a section along the line 2—2 passing through two different planes of Fig. 1;

Fig. 3 shows a section along the line 3—3 of Fig. 2;

Figs. 4 and 5 are two fragmentary views showing the operation of the control device.

In one embodiment of the object of the invention, which is given simply by way of example, the winch is formed in the following manner.

On a shaft 1 (Fig. 1) which is driven by an electric or other motor through a cardan joint 2, is fixed a first clutch plate 3 with which a second plate 4 is adapted to come into contact.

This plate is provided with a stem 5 which is terminated by a collar 6 and which slides in a hollow shaft 7 provided with a worm 8. Said worm drives in a reversible manner a helical gear 9 fixed at 10 (Fig. 2) on a shaft 11 which carries the drum 12 of the winch. On said shaft 11 is also fixed at 10 a ratchet wheel 13, the teeth of which are adapted to receive a pawl 14 which is controlled as follows.

Said pawl is preferably formed by a roller carried by a fork 15 which swings about a pin 16 on a crank 17. Said crank is fixed on a shaft 18 actuated by an operating lever 19 which may be directly controlled by hand by means of any suitable remote transmission device.

The crank 17 is provided with a nose 20 on which is hooked a spring 21 acting on the fork 15, the stay 22 of which abuts against the crank so as to limit the return travel of the pawl and increase the resistance of same to the thrust of the teeth of the ratchet after the load has been lifted.

On the shaft 18 are provided two arms 23 (Fig. 2) which, by means of projections 24, can act on a hollow pusher 25 and make it slide in bearings 26 (Fig. 1) of the case 27 which houses the whole mechanism. Said pusher is retracted to a rear position by a spring 28.

In the pusher can slide a catch 29 provided with a slot 30 into which can be inserted the bolt 31 of a lock 32 which passes through the pusher perpendicular to its axis.

The catch 29 is in contact, at one of its ends, with a spacing-bar 33 provided with a collar 34 against which bears a spring 35 that bears, at its other end, against the collar 6 of the stem of the clutch plate 4. A spring 36, which bears against the other face of said collar 6, is kept inside the hollow shaft 7 by a nut 37 screwed in the latter and exerts an opposing action to the spring 35, but weaker than that of the spring 35.

The length of the spring 35 is such that its action on the stem 5 is nil or almost nil when the catch 29 is at the end of its rearward travel. The spring 36 then predominates and acts on the stem 5 to separate the plate 4 from the plate 3.

Now, the position of the catch 29 depends on the relative positions of the pusher 25 and of the lock 32.

The latter terminates in a jaw 38 in which a fork 39 can act on it through a pin 40. Said fork is secured to a shaft 41 that a spring 42 tends to rotate to lift the lock 32. On said shaft is fixed a lever 43, at the end of which is pivoted, by means of a jaw 44, a lever 45 (Fig. 3) of which the end is provided with a projection 46. Said projection engages in a spiral groove 47 provided in a plate 48 secured to the gear 9.

In the embodiment shown and considered preferable, the projection 46 is double and engages, on either side of the lever 45, in two spiral grooves 47 which are opposite each other and are formed in two identical plates 48.

Said plates are secured to the gear 9 by screws 49 which enable the plates to be given a suitable direction relatively to the gear.

In each groove 47 can be fixed an adjustably positioned abutment 50 against which the projection 46 is adapted to abut after having travelled in the groove a distance which depends on a predetermined number of revolutions effected by the plates 48 with the gear 9 and the drum 12.

The operation of the apparatus is as follows:

When the winch is inoperative, it is released and the load is at its low point. The mechanism is then placed in the position shown in Fig. 1. The lock 32 is lifted and secures the catch 29 to the pusher 25 which is in its extreme rearward position under the action of its spring 28. The plates 3 and 4 are kept apart by the spring 36.

The operating lever 19 is placed in the position I and the pawl 14 is raised. As regards the projection 46 of the lever 45, it is in its extreme position in the grooves 47 towards the centre of the plates 48.

As soon as the operating lever 19 is acted on and brought into the raising position II, (Fig. 4),

the arms 23 (Fig. 2) actuate the pusher 26 and compress the spring 28. The pusher is in this case accompanied by the catch 29 which is secured thereto by the bolt 31 of the lock 32. The catch then acts on the spacing bar 33 which compresses the spring 35 which in turn overcomes the resistance of the spring 36 and brings the plate 4 into contact with the plate 3 that is actuated by the motor.

The clutch is thus engaged and the worm 8 drives the drum 12 by means of the gear 9 and of the shaft 11.

While the load is being raised, the plates 48 rotate with the gear 9 and the projection 46 follows the grooves 47 of these latter until it abuts against the abutment 50. This instant must correspond to that at which the load occupies its highest position and this coincidence is obtained by suitably positioning the abutment 50.

When said abutment comes into contact with the projection 46, the plates continue to rotate and thus move said projection along a certain length of an arc. By so doing, they act on the lever 45 which causes the lever 43 to pivot with its shaft 41. The fork 39 is then lowered with the lock 32, the bolt 31 of which leaves the slot 30 of the catch 29. From this instant onwards, the spring 35 can push back the spacing bar 33 which returns the catch to its inoperative position.

The spring 35 is then relaxed and the spring 36 acts on the stem 5 of the plate 4 and separates same from the plate 3. The winch is thus released and its various elements occupy the positions shown in Fig. 5.

During its operation, the ratchet 13 was rotating in the direction of the arrow *f*, and lifted with each of its teeth the pawl 14. As soon as the winch is released, the load exerts its pull on

the drum and rotates the ratchet 13 in
rection of the arrow *f'* so that one of th
abuts against the pawl, the stay 22 of w
resting on the crank 17. Any rotation
drum in this direction is thus made imp
and the load is locked at its highest point.

In order to lower the load, the operatin
19 is brought into the position I. The pu
is then brought backwards and the paw
lifted as in Fig. 1. The ratchet is releas
the load can then move downwards, r
the drum 13.

In order to reduce the downward spee
suitable value, the shaft 11 is provided
governor formed by a piston 51 that mov
cylinder 52 along a screw 53 driven by said

The cylinder is filled with oil and the pi
is provided with openings 54. Flap valves
furthermore arranged in said piston.

When the shaft 11 is driven by the mot
oil can pass through the piston by way
openings 54 and the valves 55 and thus of
resistance to the forward movement of the
along the screw 53.

On the contrary, when the shaft 11 is
by the load, the oil only pass through the
ings 54 and offers a fairly large resistance
movement of the piston which thus bral
rotation of the screw 53.

This speed damper may moreover be r
by any similar device and the apparat
scribed above may be subjected to any
fications of shape and of detail without f
reason departing from the spirit of the
tion.

It is obvious that this winch may be u
manipulating any load and in particular
ever the lowering of such load is to be e
in any case.

ROLAND LARA

PUBLISHED

MAY 25, 1943.

BY A. P. C.

R. LARAQUE

WINCH PROVIDED WITH AN AUTOMATIC RELEASE AT THE END OF THE LIFTING OPERATION

Filed Oct. 17, 1939

Serial No. 299,877

3 Sheets-Sheet 1

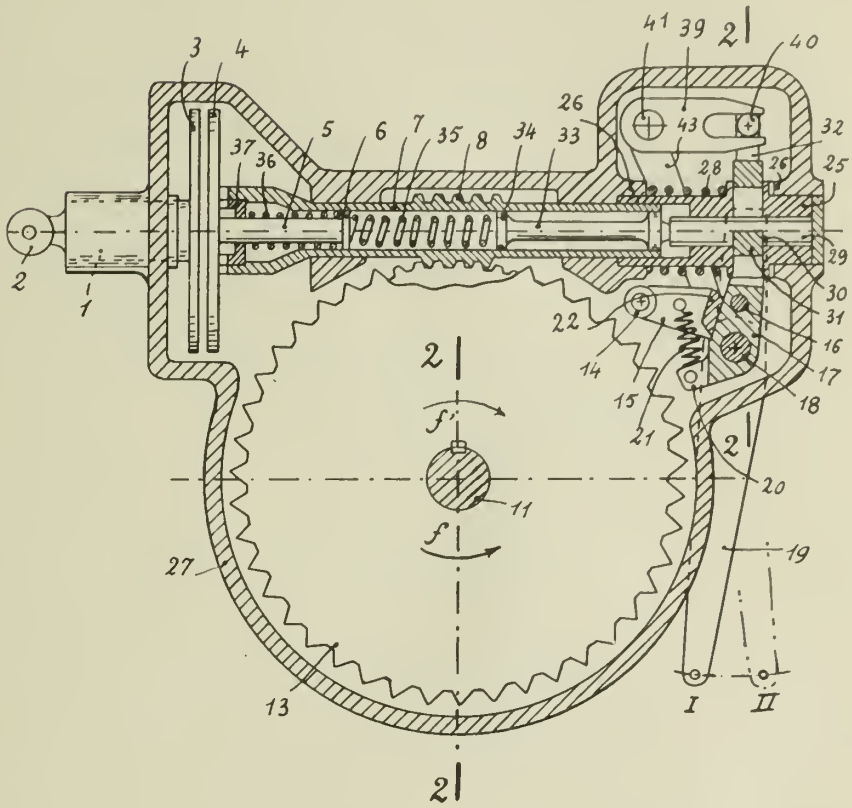

Fig. 1

Inventor:
R. Laraque
By E. F. Wenderoth
Atty

PUBLISHED

MAY 25, 1943.

BY A. P. C.

R. LARAQUE

WINCH PROVIDED WITH AN AUTOMATIC RELEASE AT THE END OF THE LIFTING OPERATION

Filed Oct. 17, 1939

Serial No. 299,877

3 Sheets-Sheet 2

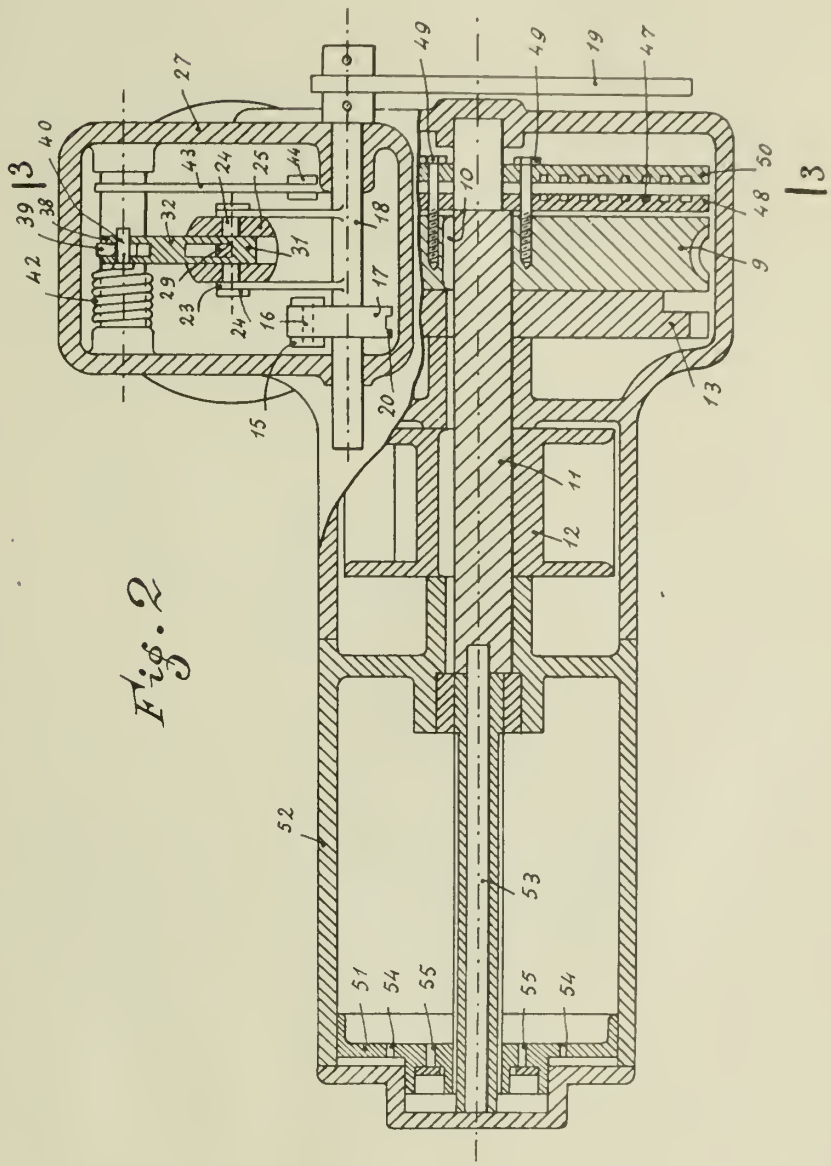

Fig. 2

Inventor:
R. Laraque
By E. F. Wenderoth
Atty

PUBLISHED

MAY 25, 1943.

BY A. P. C.

R. LARAQUE

WINCH PROVIDED WITH AN AUTOMATIC RELEASE AT THE END OF THE LIFTING OPERATION

Filed Oct. 17, 1939

Serial No. 299,877

3 Sheets-Sheet 3

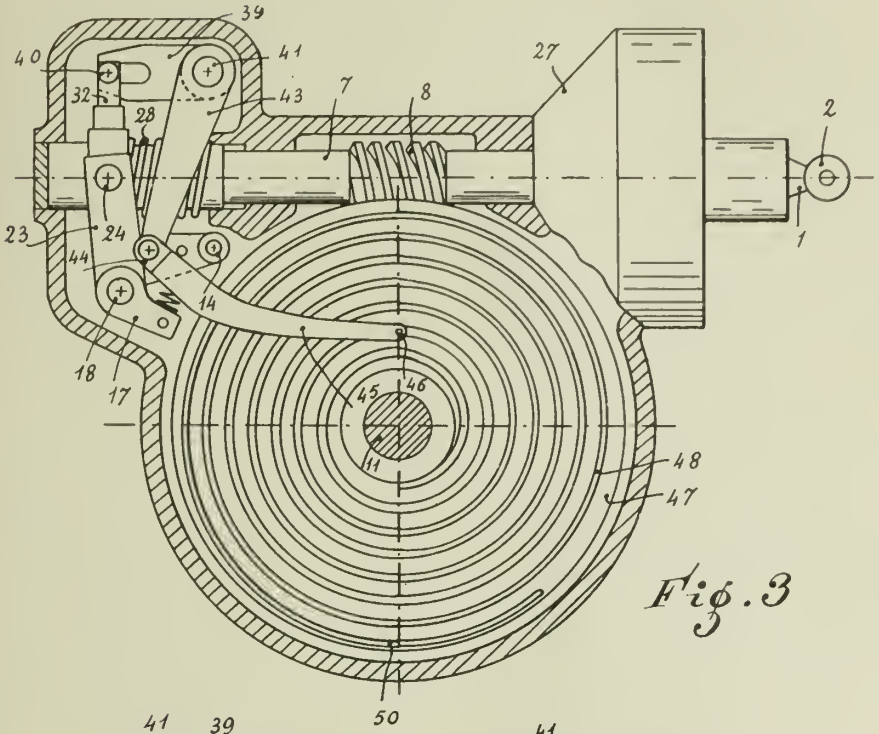

Fig. 3

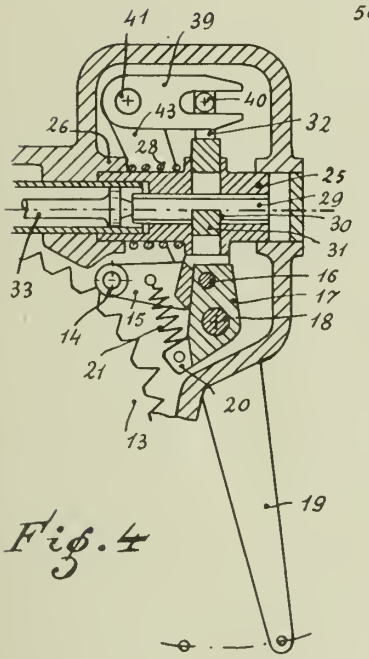

Fig. 4

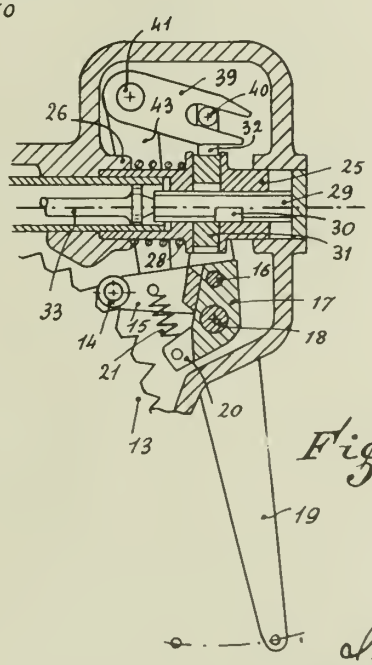

Fig. 5

Inventor:
R. Laraque
By E. F. Wenderoth
Atty

F